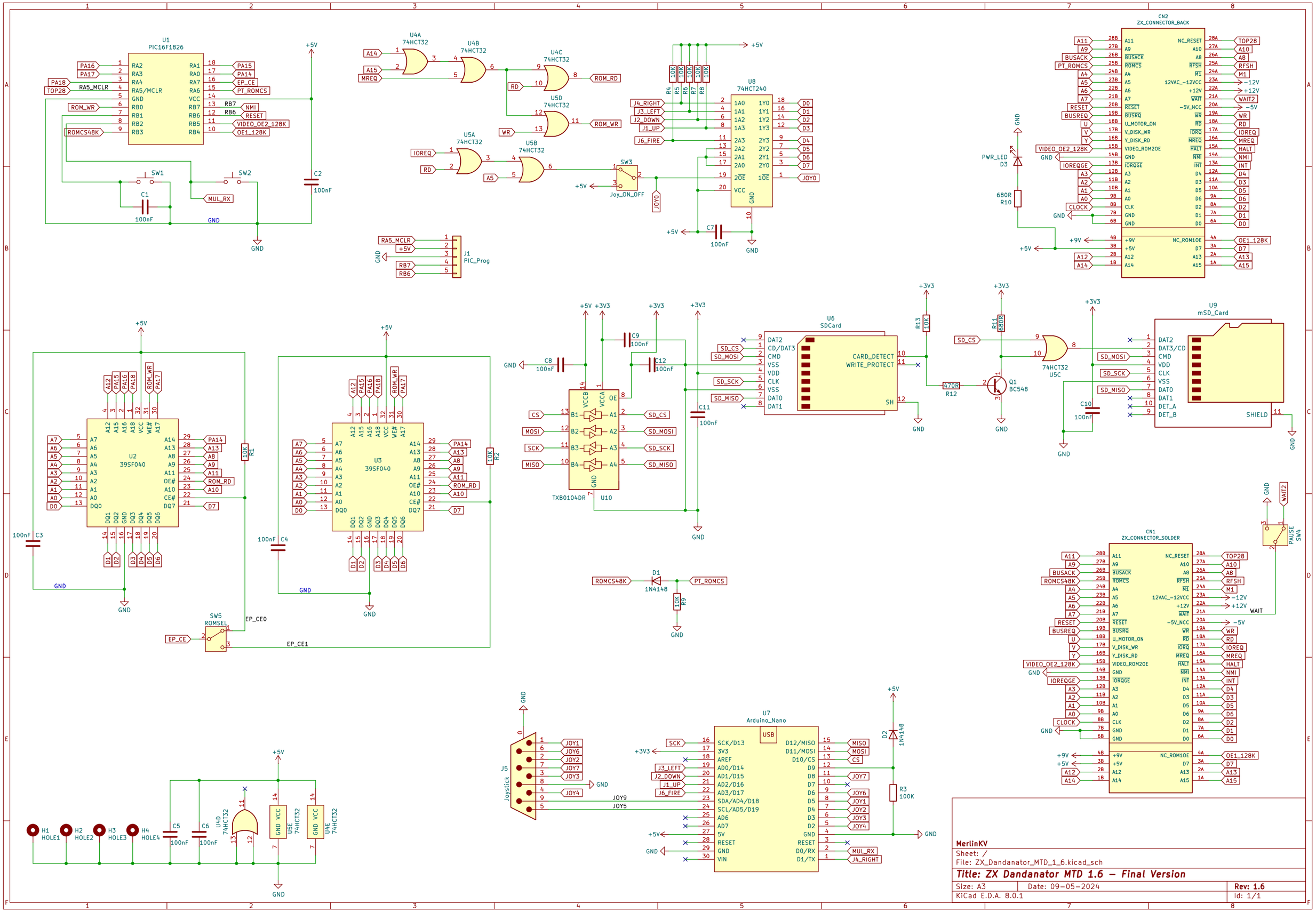
U1
PIC16F1826
U2
39SF040
U3
39SF040
U4A
74HCT32
U4B
74HCT32
U4C
74HCT32
U5D
74HCT32
U5A
74HCT32
U5B
74HCT32
U8
74HCT240
CN2
ZX_CONNECTOR_BACK
CN1
ZX_CONNECTOR_SOLDER
U6
SDCard
U9
mSD_Card
U10
TXB0104DR
U7
Arduino_Nano
J5
Joystick
J1
PIC_Prog
SW1
SW2
SW3
Joy_ON_OFF
SW5
ROMSEL
SW4
PAUSE
Q1
BC548
D1
1N4148
D2
1N4148
D3
PWR_LED
H1
HOLE1
H2
HOLE2
H3
HOLE3
H4
HOLE4
MerlinKV
Sheet: /
File: ZX_Dandanator_MTD_1_6.kicad_sch
Title: ZX Dandanator MTD 1.6 – Final Version
Size: A3
Date: 09-05-2024
Rev: 1.6
KiCad E.D.A. 8.0.1
Id: 1/1