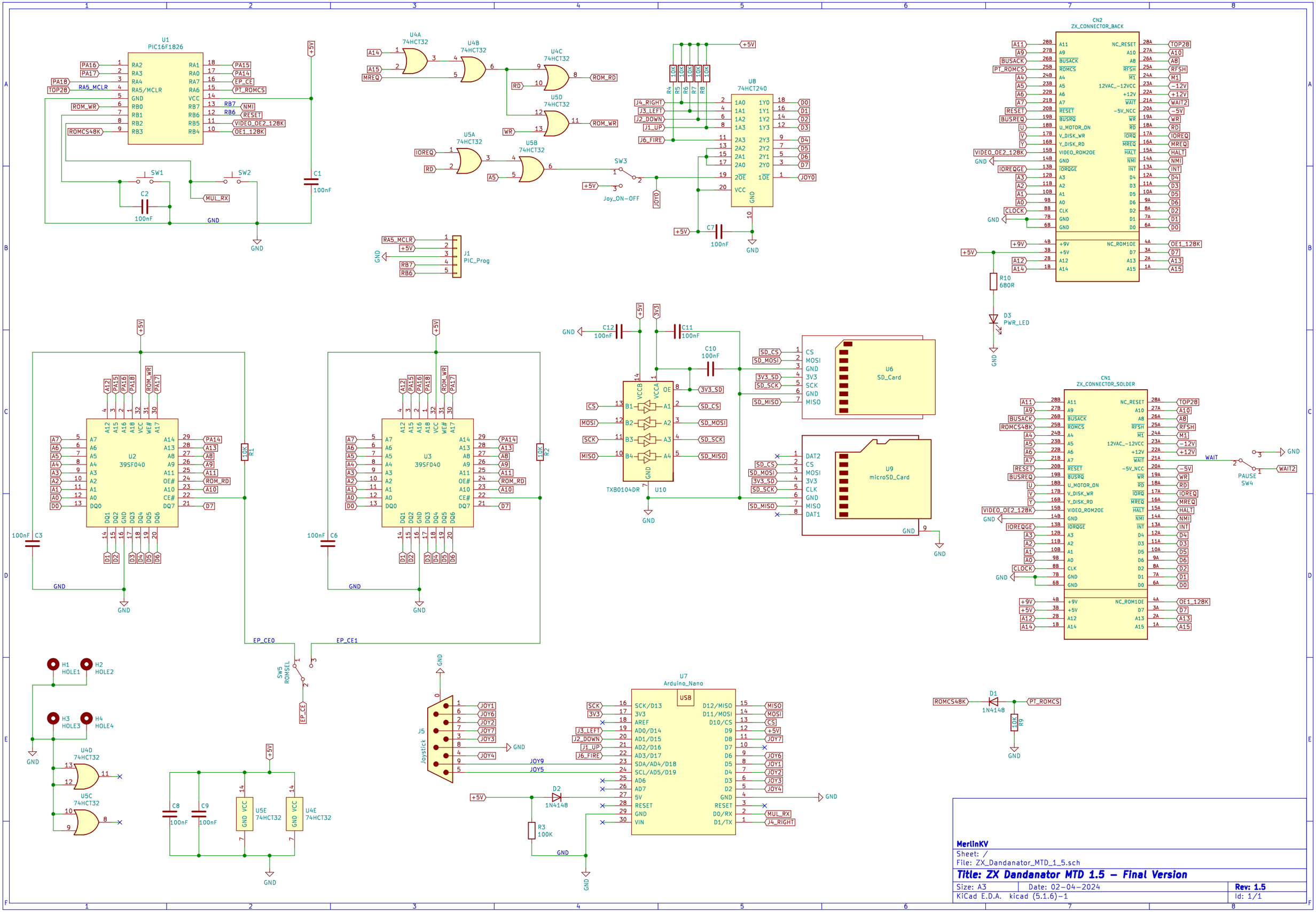
U1
PIC16F1826
U4A
74HCT32
U4B
74HCT32
U4C
74HCT32
U5D
74HCT32
U5A
74HCT32
U5B
74HCT32
U8
74HCT240
SW1
SW2
SW3
Joy_ON-OFF
J1
PIC_Prog
CN2
ZX_CONNECTOR_BACK
CN1
ZX_CONNECTOR_SOLDER
U2
39SF040
U3
39SF040
U6
SD_Card
U9
microSD_Card
U10
TXB0104DR
U7
Arduino_Nano
J5
Joystick
SW5
ROMSEL
PAUSE
SW4
D3
PWR_LED
D1
1N4148
D2
1N4148
H1
HOLE1
H2
HOLE2
H3
HOLE3
H4
HOLE4
U4D
74HCT32
U5C
74HCT32
U5E
74HCT32
U4E
74HCT32
MerlinKV
Sheet: /
File: ZX_Dandanator_MTD_1_5.sch
Title: ZX Dandanator MTD 1.5 – Final Version
Size: A3
Date: 02-04-2024
Rev: 1.5
KiCad E.D.A. kicad (5.1.6)-1
Id: 1/1