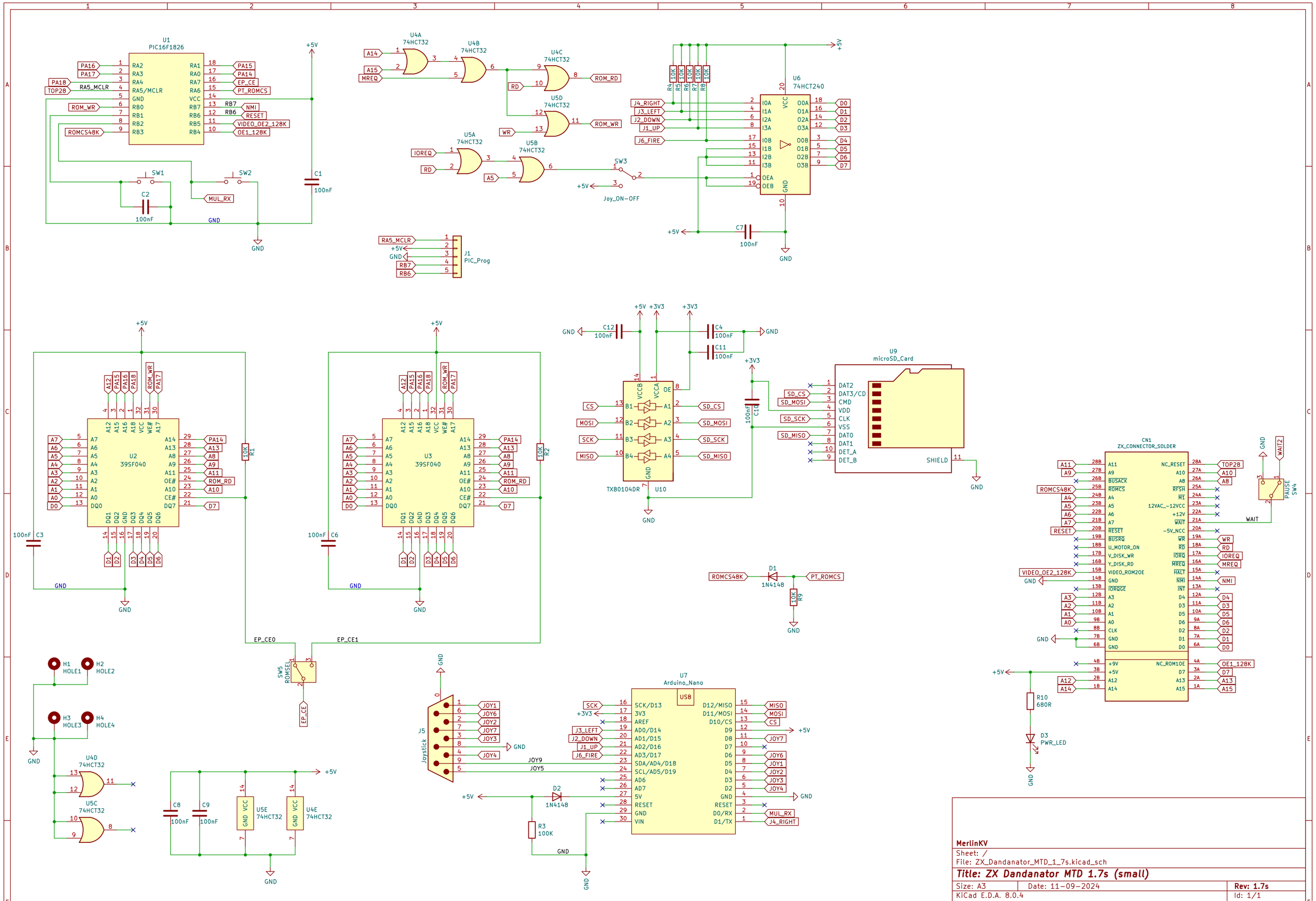

MerlinKV

Sheet: /

File: ZX_Dandanator_MTD_1_7s.kicad_sch

Title: ZX Dandanator MTD 1.7s (small)

Size: A3	Date: 11-09-2024	Rev: 1.7s
KiCad E.D.A. 8.0.4		Id: 1/1