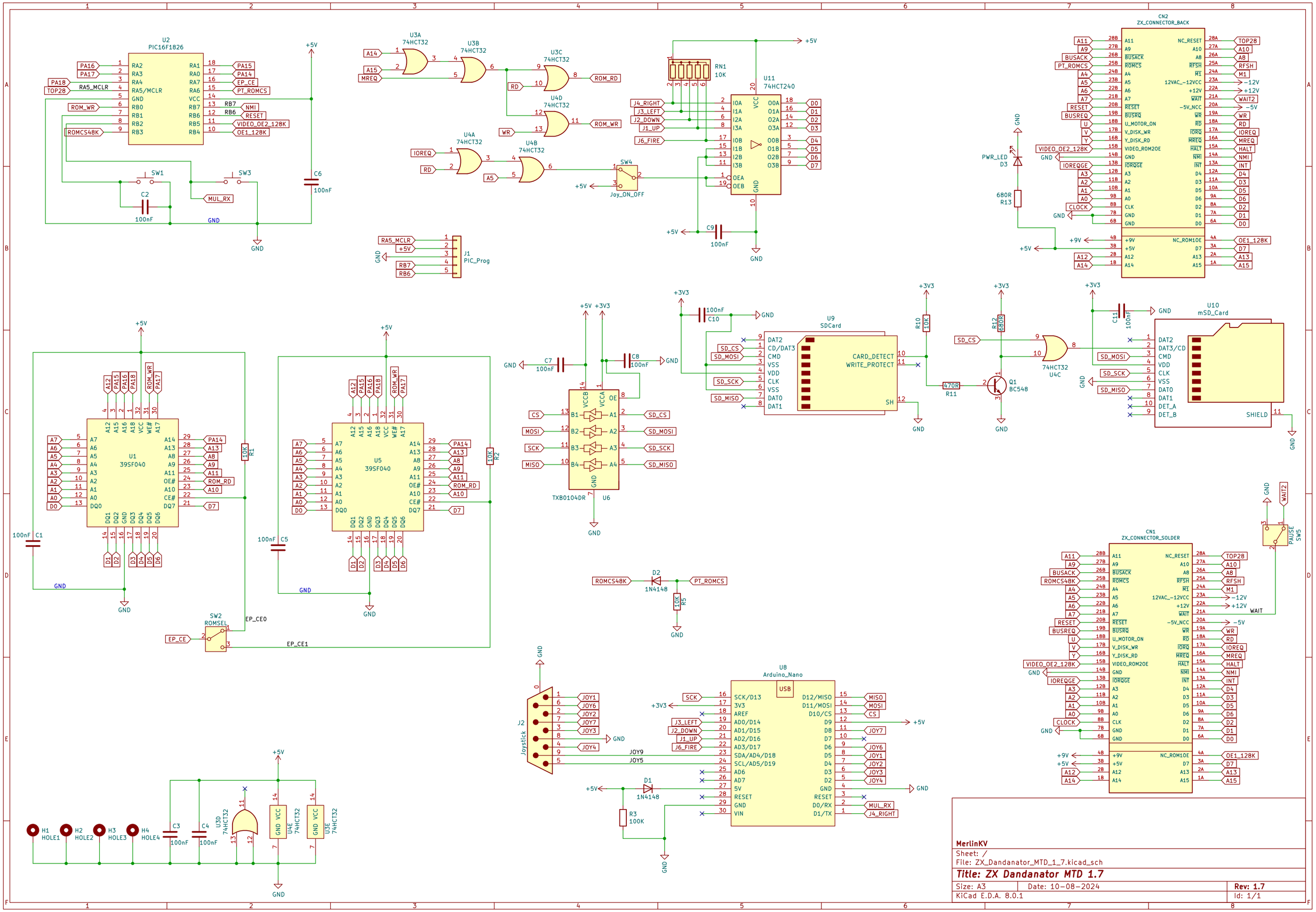
U2
PIC16F1826
U3A 74HCT32
U3B 74HCT32
U3C 74HCT32
U4D 74HCT32
U4A 74HCT32
U4B 74HCT32
RN1 10K
U11 74HCT240
CN2 ZX_CONNECTOR_BACK
J1 PIC_Prog
U1 39SF040
U5 39SF040
U9 SDCard
U10 mSD_Card
74HCT32 U4C
Q1 BC548
TXB0104DR U6
CN1 ZX_CONNECTOR_SOLDER
U8 Arduino_Nano
J2 Joystick
SW2 ROMSEL
SW4 Joy_ON_OFF
SW5 PAUSE
D1 1N4148
D2 1N4148
U3D 74HCT32
U4E 74HCT32
U3E 74HCT32
H1 HOLE1
H2 HOLE2
H3 HOLE3
H4 HOLE4
MerlinKV
Sheet: /
File: ZX_Dandanator_MTD_1_7.kicad_sch
Title: ZX Dandanator MTD 1.7
Size: A3
Date: 10-08-2024
Rev: 1.7
KiCad E.D.A. 8.0.1
Id: 1/1