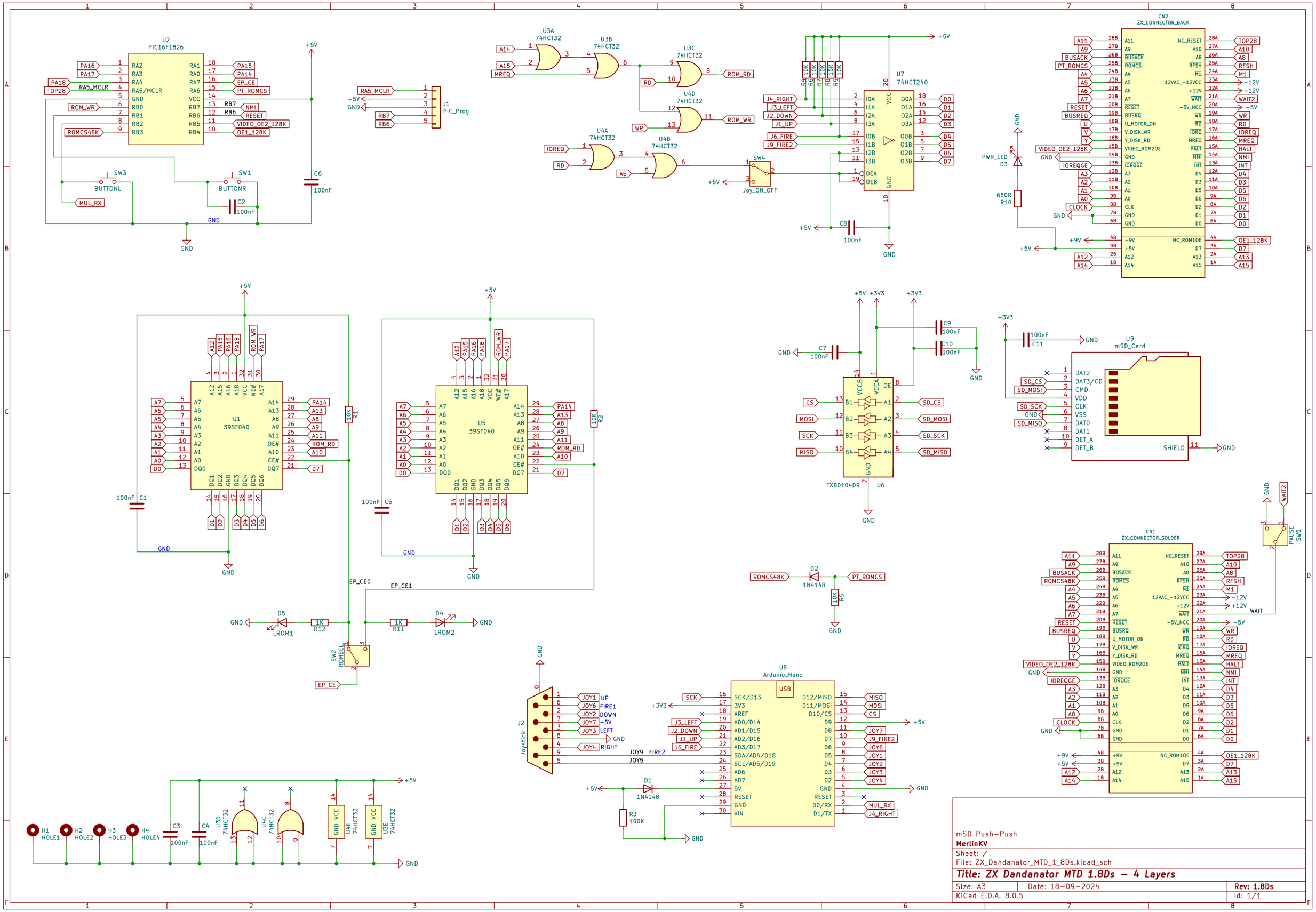
U2
PIC16F1826
U3A 74HCT32
U3B 74HCT32
U3C 74HCT32
U4D 74HCT32
U4A 74HCT32
U4B 74HCT32
J1 PIC_Prog
U7 74HCT240
CN2 ZX_CONNECTOR_BACK
U1 39SF040
U5 39SF040
U9 mSD_Card
U6 TXB0104DR
CN1 ZX_CONNECTOR_SOLDER
U8 Arduino_Nano
J2 Joystick
mSD Push-Push
MerlinKV
Sheet: /
File: ZX_Dandanator_MTD_1_8Ds.kicad_sch
Title: ZX Dandanator MTD 1.8Ds – 4 Layers
Size: A3
Date: 18-09-2024
Rev: 1.8Ds
KiCad E.D.A. 8.0.5
Id: 1/1