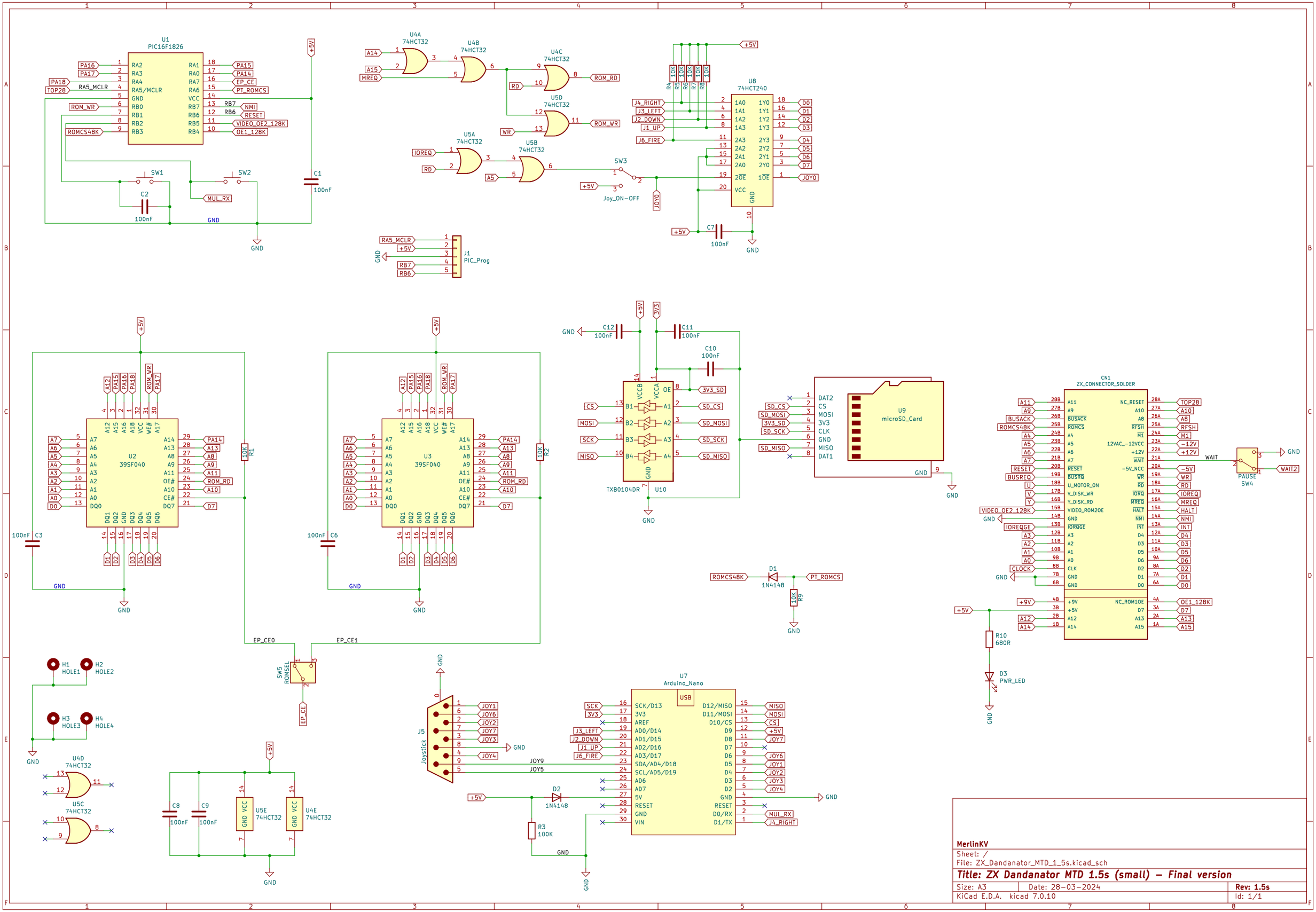
U1
PIC16F1826
U4A
74HCT32
U4B
74HCT32
U4C
74HCT32
U5D
74HCT32
U5A
74HCT32
U5B
74HCT32
U8
74HCT240
SW1
SW2
SW3
Joy_ON-OFF
J1
PIC_Prog
U2
39SF040
U3
39SF040
TXB0104DR
U10
U9
microSD_Card
CN1
ZX_CONNECTOR_SOLDER
PAUSE
SW4
SW5
ROMSEL
H1
HOLE1
H2
HOLE2
H3
HOLE3
H4
HOLE4
U4D
74HCT32
U5C
74HCT32
U5E
74HCT32
U4E
74HCT32
J5
Joystick
U7
Arduino_Nano
D1
1N4148
D2
1N4148
D3
PWR_LED
R10
680R
R3
100K
R9
10K
MerlinKV
Sheet: /
File: ZX_Dandanator_MTD_1_5s.kicad_sch
Title: ZX Dandanator MTD 1.5s (small) – Final version
Size: A3
Date: 28-03-2024
Rev: 1.5s
KiCad E.D.A. kicad 7.0.10
Id: 1/1