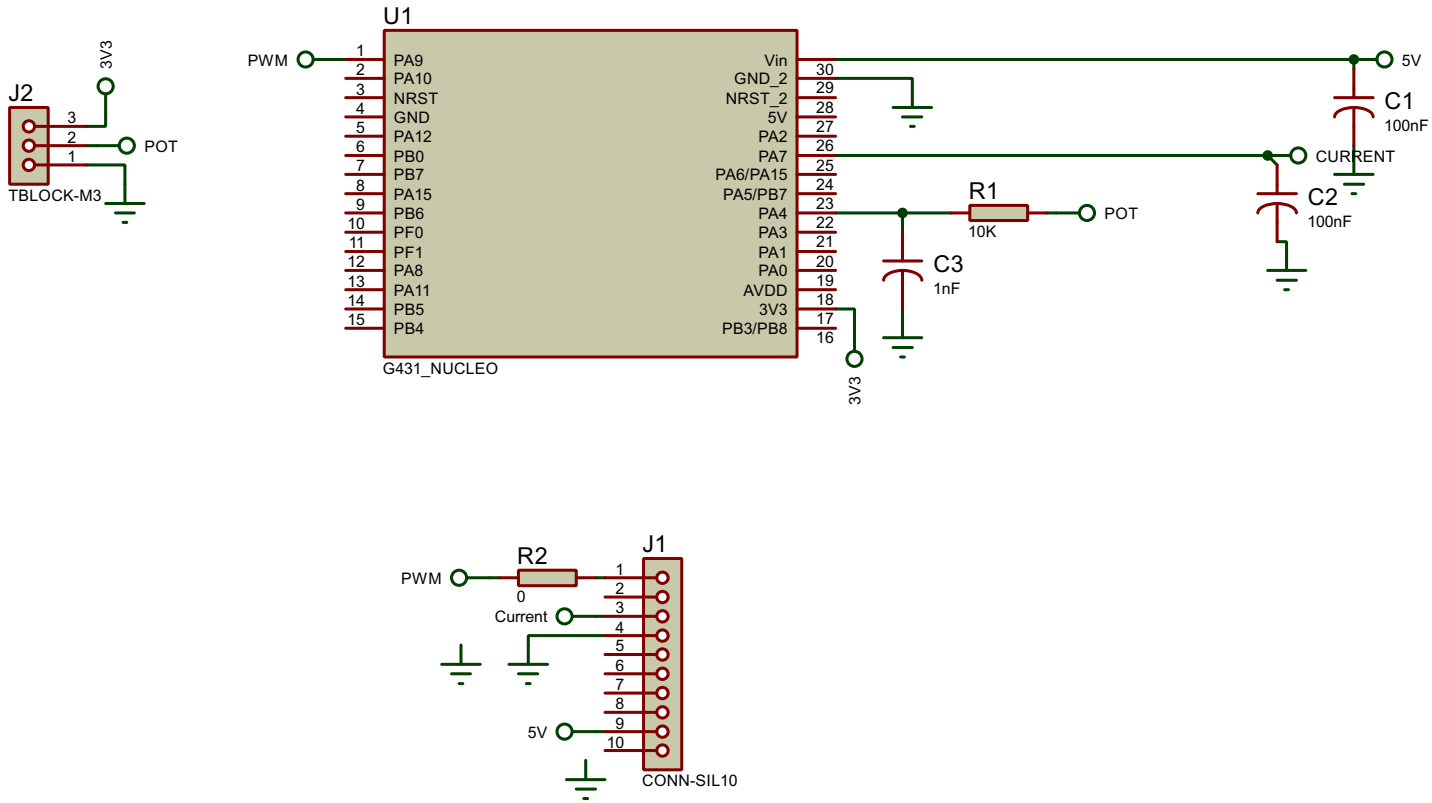
U1
PWM
1 PA9
2 PA10
3 NRST
4 GND
5 PA12
6 PB0
7 PB7
8 PA15
9 PB6
10 PF0
11 PF1
12 PA8
13 PA11
14 PB5
15 PB4
Vin 30
GND_2 29
NRST_2 28
5V 27
PA2 26
PA7 25
PA6/PA15 24
PA5/PB7 23
PA4 22
PA3 21
PA1 20
PA0 19
AVDD 18
3V3 17
PB3/PB8 16
G431_NUCLEO
3V3
J2
3V3
3
2
1
POT
TBLOCK-M3
5V
C1
100nF
CURRENT
C2
100nF
R1
10K
POT
C3
1nF
R2
PWM
0
Current
5V
J1
1
2
3
4
5
6
7
8
9
10
CONN-SIL10