MICROCONTROLLER STM32

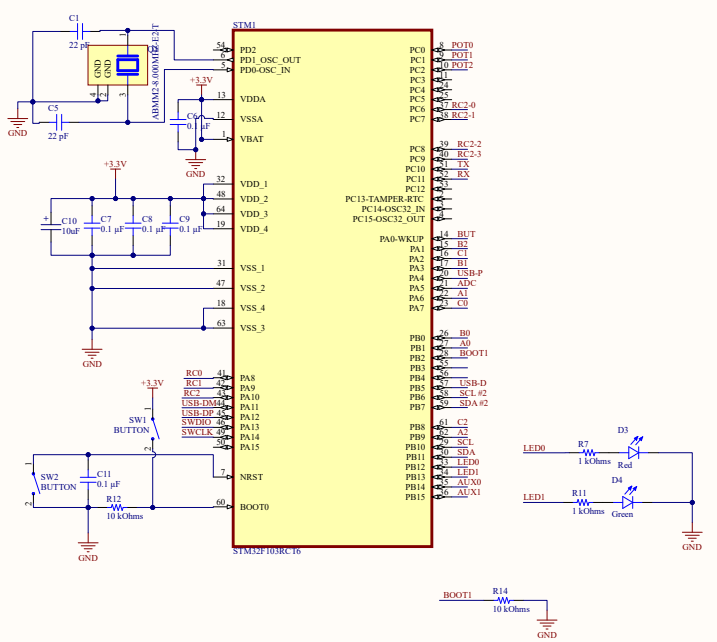

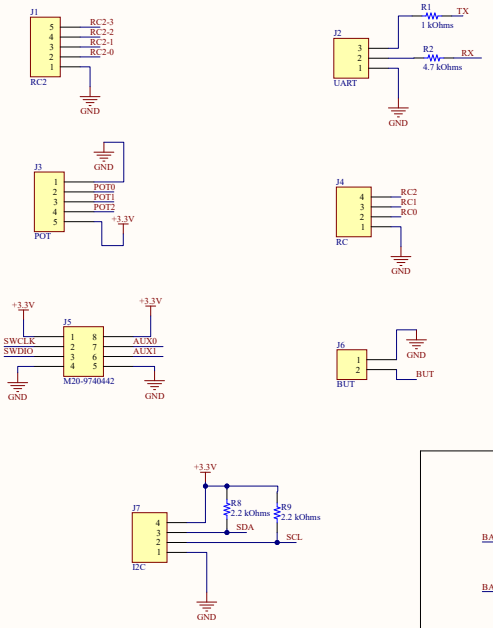

LM1117 REGULATOR

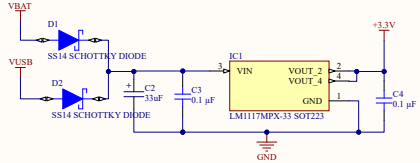

MINI USB PORT

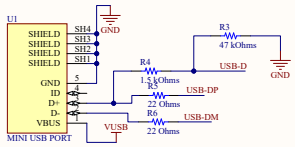

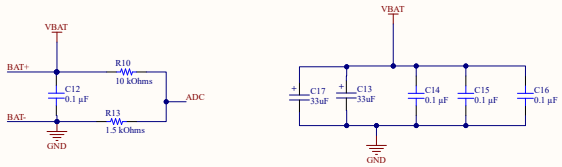

MPU6050

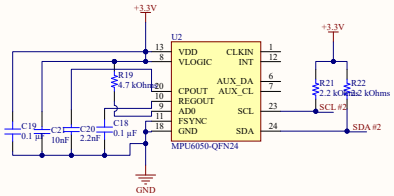

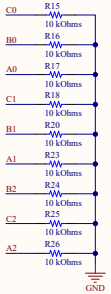

TC4420 MOTOR DRIVER

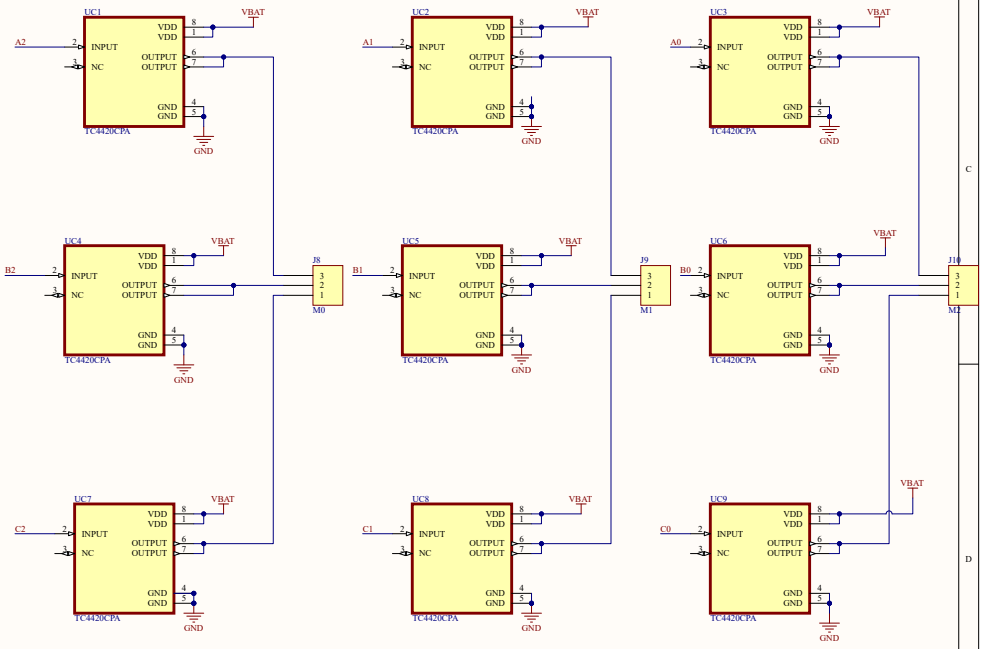

Title		
Size A4	Number	Revision
Date: 8/27/2025		Sheet of
File: C:\Users\...\Sheet2.SchDoc		Drawn By: