NOTES:
No anodizing

TOP (1 : 1)

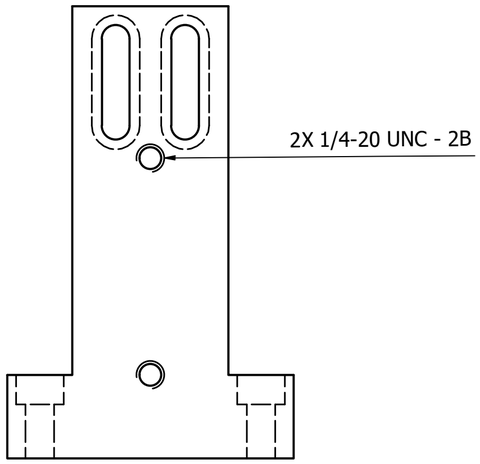

ISO (1 : 1)

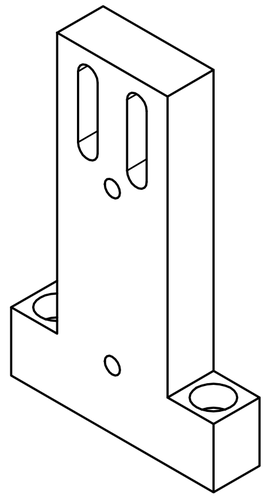

FRONT (1 : 1)

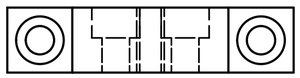

RIGHT (1 : 1)

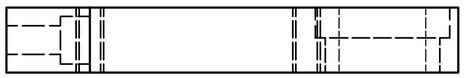

BOTTOM (1 : 1)

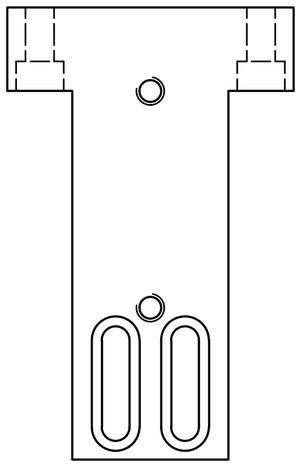

Designed by	Checked by	Approved by	Date	Date	
nvladi				27.02.2026	

AdapterBracket-Part1	Edition	Sheet 1 / 1