Document Title	Specification of Diagnostic Log and Trace
Document Owner	AUTOSAR
Document Responsibility	AUTOSAR
Document Identification No	351
Document Classification	Standard

Document Version	1.2.0
Document Status	Final
Part of Release	4.0
Revision	3

Document Change History			
Date	**Version**	**Changed by**	**Change Description**
09.12.2011	1.2.0	AUTOSAR Administration	• Added Dlt control messages for getting values of modifiable parameters • • Modification and update of Dem and Dcm interfaces • • Added FIBEX example for non verbose transmission mode
21.10.2010	1.1.0	AUTOSAR Administration	• Bug fixes and extension of Dlt control message specification • Update of communication with Dem (Dem_GetEventFreezeFrameData) • Update of interface to Dcm (Dlt_ReadData)
30.11.2009	1.0.0	AUTOSAR Administration	Initial Release

Disclaimer

This specification and the material contained in it, as released by AUTOSAR, is for the purpose of information only. AUTOSAR and the companies that have contributed to it shall not be liable for any use of the specification.

The material contained in this specification is protected by copyright and other types of Intellectual Property Rights. The commercial exploitation of the material contained in this specification requires a license to such Intellectual Property Rights.

This specification may be utilized or reproduced without any modification, in any form or by any means, for informational purposes only.
For any other purpose, no part of the specification may be utilized or reproduced, in any form or by any means, without permission in writing from the publisher.

The AUTOSAR specifications have been developed for automotive applications only. They have neither been developed, nor tested for non-automotive applications.

The word AUTOSAR and the AUTOSAR logo are registered trademarks.

Advice for users

AUTOSAR specifications may contain exemplary items (exemplary reference models, "use cases", and/or references to exemplary technical solutions, devices, processes or software).

Any such exemplary items are contained in the specifications for illustration purposes only, and they themselves are not part of the AUTOSAR Standard. Neither their presence in such specifications, nor any later documentation of AUTOSAR conformance of products actually implementing such exemplary items, imply that intellectual property rights covering such exemplary items are licensed under the same rules as applicable to the AUTOSAR Standard.

Table of Contents

Known Limitations ... 8

1 Introduction and functional overview ... 9

2 Acronyms and abbreviations ... 11

3 Related documentation ... 12

3.1 Input documents ... 12
3.2 Related standards and norms ... 13

4 Constraints and assumptions ... 14

4.1 Assumptions ... 14
4.1.1 Available RAM ... 14
4.1.2 Available NVRAM ... 14
4.1.3 Communication interface ... 14
4.2 Limitations ... 14
4.2.1 Runtime resources ... 14
4.2.2 VFB Trace ... 14
4.2.3 Security ... 15
4.2.4 Dlt communication module ... 15
4.3 Applicability to car domains ... 15

5 Dependencies to other modules ... 16

5.1 File structure ... 16
5.1.1 Code file structure ... 16
5.1.2 Header file structure ... 17

6 Requirements traceability ... 18

7 Functional specification ... 23

7.1 Dlt term definition ... 23
7.1.1 Log and trace message ... 23
7.1.2 User ... 23
7.1.3 Log ... 23
7.1.4 Trace ... 23
7.1.5 ECU ID ... 23
7.1.6 Session ID ... 24
7.1.7 Application ID ... 24
7.1.8 Context ID ... 24
7.1.9 Message ID ... 24
7.1.10 Log level and trace status ... 24
7.1.11 Payload ... 25
7.1.12 External client ... 25
7.2 Use Cases for logging and tracing with Dlt ... 25
7.2.1 Use Case general logging with Dlt ... 25
7.2.2 Use Case logging over UDS with Dlt ... 26
7.2.3 Use Case tracing of VFB ... 27
7.2.4 Use Case runtime configuration of Dlt ... 28
7.2.5 Use Case Dlt interaction only over Dlt communication module ... 29

7.3 Internal behavior of Dlt Module 29
7.3.1 Overview 29
7.3.1.1 Buffer strategy 30
7.3.1.2 Runtime configuration 31
7.3.2 Startup and Shutdown behavior 31
7.3.3 Communication with producer of log and trace messages 32
7.3.3.1 Communication with SW-C 33
7.3.3.2 VFB-Trace 38
7.3.3.3 Log Messages from BSW-Modules Dem and Det 41
7.3.4 Recommendation for generation of Message IDs 43
7.4 Communication from Dlt with external client 43
7.4.1 Communication over standard Dcm channel 43
7.4.1.1 Using ResponseOnEvent with Dcm 44
7.4.2 Communication over Dlt Communication Module 45
7.5 Security 46
7.5.1 Securing communication over Dcm 46
7.5.2 Security for communication over Dlt communication module 47
7.6 Runtime management and Implementation 47
7.6.1 Buffering Messages 47
7.6.2 Bandwidth management 48
7.6.3 Interfaces and behavior of Dlt communication module 48
7.6.4 Administration of pairs of Application ID and Context ID, log levels and trace status 49
7.6.4.1 Port Defined Argument Values and LogTraceSessionControl port interface 49
7.6.4.2 Configuration and usage of Dlt ServiceNeeds 53
7.6.4.3 Recommended tables in Dlt to hold information about Application and Context IDs 54
7.6.5 Message Filtering 56
7.6.5.1 Administration of log level for filtering 57
7.6.5.2 Administration of trace state for filtering 57
7.6.6 Storing Configuration in NVRAM 58
7.6.7 Processing of control messages 60
7.6.8 Message Handling 60
7.6.8.1 Filling the Header 60
7.6.8.2 Filling the extended Header 61
7.6.8.3 Switch between Verbose and Non Verbose Mode 62
7.7 Protocol Specification (for transmitting to a external client and saving on the client) 62
7.7.1 Dlt Message Format in General 62
7.7.2 Header Definition of the Dlt Protocol 63
7.7.3 Standard Header 63
7.7.3.1 Header Type (HTYP) 65
7.7.3.2 Message Counter (MCNT) 67
7.7.3.3 Length (LEN) 67
7.7.3.4 ECU ID (ECU) 67
7.7.3.5 Session ID (SEID) 68
7.7.3.6 Timestamp (TMSP) 68
7.7.3.7 Assembly of Standard Header 68
7.7.4 Dlt Extended Header 69

7.7.4.1 Message Info (MSIN) ... 71
7.7.4.2 Number of Arguments (NOAR) ... 74
7.7.4.3 Application ID (APID) ... 74
7.7.4.4 Context ID (CTID) ... 74
7.7.4.5 Assembly of Extended Header ... 75
7.7.5 Payload ... 75
7.7.5.1 Non-Verbose Mode ... 76
7.7.5.2 Verbose Mode ... 81
7.7.6 Additional Message Parts ... 94
7.7.6.1 Extensions for storing in a database/file ... 94
7.7.7 Predefined messages ... 95
7.7.7.1 Control messages ... 96
7.7.7.2 Timing messages ... 116
7.7.8 Connection management ... 117
7.8 Debugging ... 117
7.9 Error classification ... 118
7.10 Error detection ... 118
7.11 Error notification ... 119
7.12 Scheduling strategy ... 119
7.13 Version Checking ... 119

8 API specification ... 120

8.1 Overview ... 120
8.2 Imported types ... 121
8.3 Type definitions ... 122
8.3.1 Dlt_ConfigType ... 122
8.3.2 Dlt_MessageTypeType ... 122
8.3.3 Dlt_SessionIDType ... 122
8.3.4 Dlt_ApplicationIDType ... 122
8.3.5 Dlt_ContextIDType ... 123
8.3.6 Dlt_MessageIDType ... 123
8.3.7 Dlt_MessageOptionsType ... 123
8.3.8 Dlt_MessageLogLevelType ... 123
8.3.9 Dlt_MessageTraceType ... 124
8.3.10 Dlt_MessageControlInfoType ... 124
8.3.11 Dlt_MessageNetworkTraceInfoType ... 124
8.3.12 Dlt_ MessageArgumentCount ... 124
8.3.13 Dlt_MessageLogInfoType ... 125
⌋ () ... 125
8.3.14 Dlt_MessageTraceInfoType ... 125
8.3.15 Dlt_ReturnType ... 125
8.4 Function definitions ... 125
8.4.1 General provided Functions for BSW-modules ... 126
8.4.1.1 Dlt_Init ... 126
8.4.1.2 Dlt_GetVersionInfo ... 126
8.4.2 Provided functions for sending log messages from SW-Cs ... 126
8.4.2.1 Dlt_SendLogMessage ... 126
8.4.2.2 Dlt_SendTraceMessage ... 127
8.4.2.3 Dlt_RegisterContext ... 128
8.4.2.4 Provided functions for triggering DTC changes from Dem ... 129

8.4.2.5 Dlt_DemTriggerOnEventStatus ... 129
8.4.3 Provided function for fan-out capability of Det ... 129
8.4.3.1 Dlt_DetForwardErrorTrace ... 129
8.4.4 Provided interfaces for Dcm ... 130
8.4.4.1 Dlt_ActivateEvent ... 130
8.4.4.2 Dlt_ReadData ... 130
8.4.4.3 Dlt_ReadDataLength ... 131
8.4.4.4 Dlt_WriteData ... 131
8.4.4.5 Dlt_ConditionCheckRead ... 132
8.4.5 Interfaces provided by Dlt core module for internal use with Dlt communication module ... 132
8.4.5.1 Dlt_ComProvideRxBuffer ... 132
8.4.5.2 Dlt_ComProvideTxBuffer ... 133
8.4.5.3 Dlt_ComRxIndication ... 134
8.4.5.4 Dlt_ComTxConfirmation ... 135
8.5 Configurable interfaces ... 136
8.5.1 Expected Interfaces from SW-Cs ... 136
8.5.1.1 Dlt_SetLogLevel ... 136
8.5.1.2 Dlt_SetTraceStatus ... 136
8.5.1.3 Dlt_SetVerboseMode ... 137
8.5.1.4 Dlt_InjectCall ... 137
8.6 Expected Interfaces ... 138
8.6.1 Expected Interfaces from Dcm ... 138
8.6.1.1 Dcm_TriggerOnEvent ... 138
8.6.2 Expected Interfaces from Dlt communication module ... 139
8.6.2.1 Dlt_ComTransmit ... 139
8.6.2.2 Dlt_ComCancelTransmitRequest ... 139
8.6.2.3 Dlt_ComSetInterfaceStatus ... 140
8.7 Port Definition for Dlt module ... 140

9 Sequence diagrams ... 144

9.1 Dlt initialization ... 144
9.2 General logging with Dlt ... 145
9.3 Logging over UDS by using the Dcm interfaces ... 146
9.4 Tracing of VFB ... 148
9.5 Runtime configuration of Dlt ... 149
9.6 Dlt interaction only over Dlt communication module ... 150
9.7 Dlt interaction with Dem ... 151

10 Configuration specification ... 152

10.1 How to read this chapter ... 152
10.1.1 Configuration and configuration parameters ... 152
10.1.2 Variants ... 152
10.1.3 Containers ... 153
10.1.4 Specification template for configuration parameters ... 153
10.2 Containers and configuration parameters ... 155
10.2.1 Dlt ... 155
10.2.2 DltGeneral ... 156
10.2.3 DltMemory ... 159
10.2.4 DltVfbTrace ... 161

10.2.5 DltMultipleConfigurationContainer 162
10.2.6 DltBandwidth 163
10.2.7 DltMessageFiltering 164
10.2.8 DltProtocol 166
10.3 Published Information 169

11 Not applicable requirements 170

Known Limitations

The Dlt module is not prepared for multi-core systems. It works with a centralized buffer for storing messages if the Dlt module is not initialized. Hence, if data is handed to the Dlt module spontaneously from different cores in parallel, the unsynchronized access to the buffer will fail.

Therefore, code running on a core other than the main core must not spontaneously hand data to the dlt module. Configuration must be done accordingly or the usage of this buffer for storing messages at startup must be disabled.
Users of Dlt module which may affected on multi-core systems are the RTE (VFB tracing) and SWCs.

1 Introduction and functional overview

Dlt provides a generic Logging and Tracing functionality for SW-Cs and the BSW modules RTE, Det and Dem. Main focuses of this document are to specify the container, how data is buffered locally and exported over a communication interface.
The following figure shows, how Dlt is integrated into the AUTOSAR architecture and how the main functionality of Dlt shall be realized.

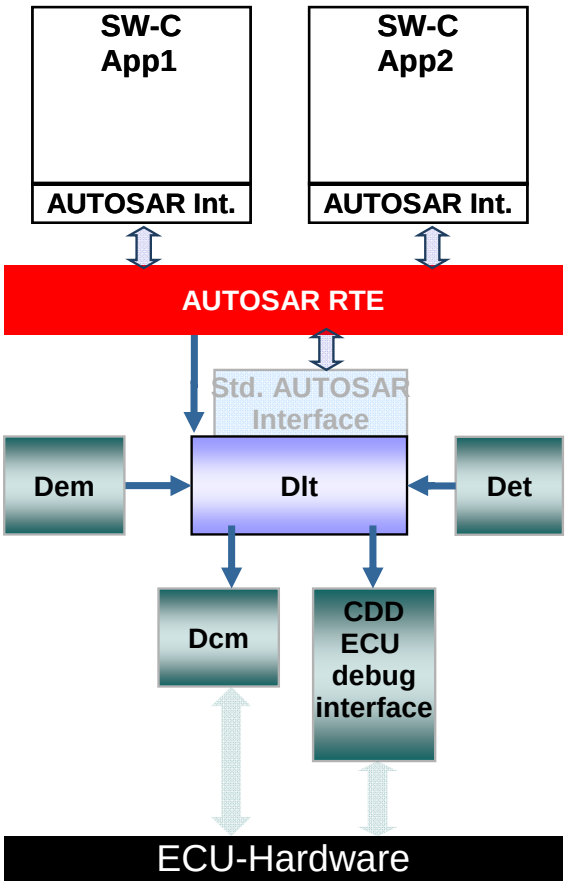

Figure 2 The position of Dlt in the AUTOSAR layered architecture

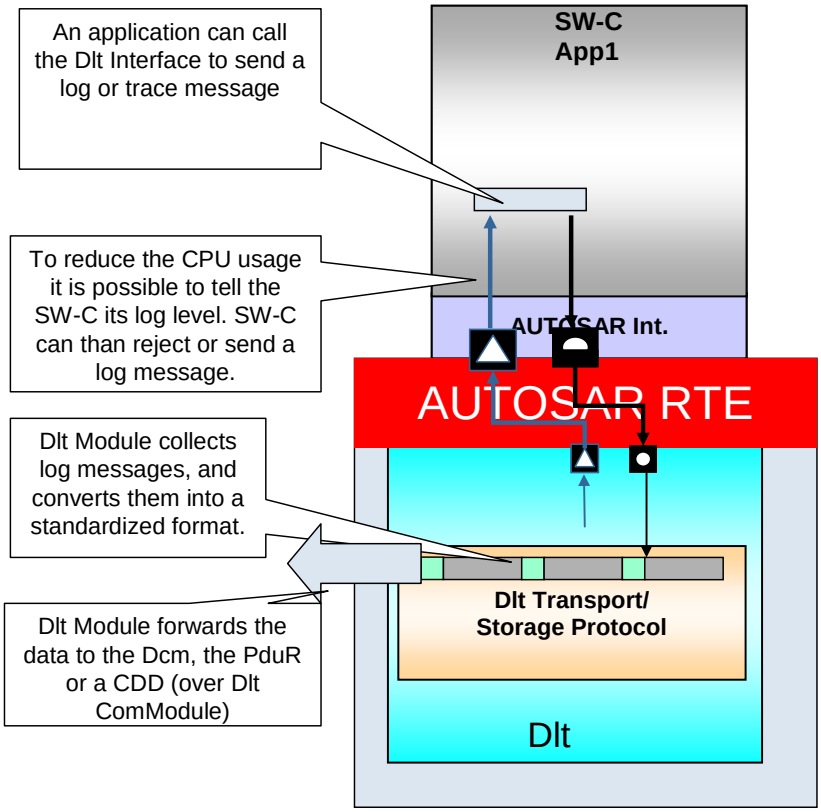

Figure 3 General workflow for sending log and trace messages over Dlt module

Dlt provide the following functionalities:

- Logging
  - Logging of errors, warnings and info messages from AUTOSAR SW-Cs, providing a standardized AUTOSAR interface
  - Gather all log and trace messages from all AUTOSAR SW-Cs in a centralized AUTOSAR service component (Dlt) in BSW
  - Log messages from Det
  - Log messages from Dem
- Tracing
  - Trace RTE/VFB
- Control
  - Enable/disable individual log and trace messages
  - Control trace levels individually by back channel
- Generic
  - Dlt available during debugging and production phase
  - Access over standard diagnosis or platform specific test interface
  - Security mechanisms to prevent misuse in production phase

2 Acronyms and abbreviations

Abbreviation / Acronym:	Description:
API	Application programming interface
Dlt	Diagnostic Log and Trace
LSB	Least Significant Bit
MSB	Most Significant Bit
OBD	On-Board-Diagnose
ODX	Open Diagnostic Data Exchange
ROE	Respond On Event
TCP/IP	Transmission Control Protocol/Internet Protocol
USB	Universal Serial Bus
XCP	Universal Measurement and Calibration Protocol

3 Related documentation

3.1 Input documents

[1] General Requirements on Basic Software Modules,
AUTOSAR_SRS_BSWGeneral.pdf

[2] Specification of PDU Router,
AUTOSAR_SWS_PDURouter.pdf

[3] Layered Software Architecture,
AUTOSAR_EXP_LayeredSoftwareArchitecture.pdf

[4] Specification of ECU Configuration,
AUTOSAR_TPS_ECUConfiguration.pdf

[5] Specification of Diagnostic Event Manager,
AUTOSAR_SWS_DiagnosticEventManager.pdf

[6] Specification of Diagnostic Communication Manager
AUTOSAR_SWS_DiagnosticCommunicationManager.pdf

[7] Basic Software Module Description Template,
AUTOSAR_TPS_BSWModuleDescriptionTemplate.pdf

[8] Software Component Template,
AUTOSAR_TPS_SoftwareComponentTemplate.pdf

[9] Specification of RTE Software,
AUTOSAR_SWS_RTE.pdf

[10] AUTOSAR Virtual Functional Bus,
AUTOSAR_EXP_VFB.pdf

[11] Specification of Development Error Tracer,
AUTOSAR_SWS_DevelopmentErrorTracer.pdf

[12] Specification of NVRAM Manager,
AUTOSAR_SWS_NVRAMManager.pdf

[13] Specification of Standard Types,
AUTOSAR_SWS_StandardTypes.pdf

[14] List of Basic Software Modules
AUTOSAR_TR_BSWModuleList.pdf

3.2 Related standards and norms

[i] ISO 14229, Road vehicles — Unified diagnostic services (UDS) — Specification and requirements , ISO, second edition 2006-12-01

[ii] ISO/IEC 9899 Programming languages – C

[iii] ISO 22901, Road vehicles -- Open diagnostic data exchange (ODX) – ODX-Standard (ASAM MCD-2D))

4 Constraints and assumptions

4.1 Assumptions

4.1.1 Available RAM

The ECU shall provide enough RAM to buffer temporarily the log and trace messages. The needed amount of memory depends on the number of log and trace message sources, the amount of data and the limited speed of the communication interface. During startup time, enough memory shall be available to store the data, until the log and trace external client is connected. If the available memory is too small, some log and trace messages may be lost.

Additionally the ECU shall provide memory for the log level table. The size depends on the amount of different Application IDs and Context IDs using Dlt.

4.1.2 Available NVRAM

The ECU shall provide enough NVRAM to store persistently the log level table. The size depends on the amount of different Application IDs and Context IDs using Dlt.

4.1.3 Communication interface

Dlt needs at least one communication interface to communicate with an external client. For security reasons the UDS communication interface of the Dcm can be used. Then the interface between Dcm and Dlt shall be used. For higher bandwidth e.g. CAN, FlexRay or Ethernet can be interfaced directly over the PDU router.

4.2 Limitations

4.2.1 Runtime resources

Dlt needs a small amount of runtime resources, even if all sources of log and trace messages are disabled. Only a single condition shall be checked for each log and trace message source. If sources of log and trace messages are enabled, it depends on the number of enabled sources, how much runtime resource is needed. Main runtime resource is needed for communication purposes.

4.2.2 VFB Trace

As VFB trace can produce a lot of traffic, this source shall be used very carefully. Only these values and function calls shall be traced, which are useful for analyzing

malfunction or value changes. Even the frequency of calls shall be regarded, not to produce too much traffic.

4.2.3 Security

An external client must be connected to change the log levels and to communicate over a diagnostic channel.

4.2.4 Dlt communication module

Dlt does not define a specific communication interface. The Dlt specification defines an API to an internal Dlt communication module. It is up to the implementer, how this communication module is implemented and how it communicates with a possible CDD (e.g. Serial or USB) or the PDU Router (e.g. CAN, FlexRay, Ethernet).

4.3 Applicability to car domains

This basic software module can be used in all car domains.

5 Dependencies to other modules

This section describes the relationship with other modules within the basic software. It describes the services that are used by these modules.

The Dlt module has dependencies to the following other AUTOSAR modules:

Det
Det has to forward all calls to *Det_ReportError()* to Dlt.

Dem
Dem has to forward all calls to *Dem_SetEventStatus() andDem_ResetEventStatus()* to Dlt.

Dcm
Dlt uses Dcm as a communication interface. The diagnostic services *ReadDataByIdentifier()*, *WriteDataByIdentifier()* and *ResponseOnEvent()* are used. Dcm provides an Interface to be used by Dlt. Dlt uses the security mechanisms of Dcm.

NVRAM-Manager
Dlt uses the NVRAM-Manager to store data persistently. NVRAM-Blocks are assigned to Dlt. In this blocks Dlt stores some data persistently.

RTE/VFB-Trace
Dlt traces RTE events. RTE provides Macros, which are implemented in Dlt, comparable to the VFB-Trace. Dlt decides which Macros to be implemented during configuration time and decides during runtime which traces are generated. Detailed description can be found in chapter 7.3.3.2.

SW-C
Dlt provides an interface for SW-Cs to generate log and trace messages. SW-C shall provide a client-server interface to be able to set log levels by Dlt.

5.1 File structure

5.1.1 Code file structure

[Dlt456] ⌈The code file structure shall not be defined within this specification completely. At this point it shall be pointed out that the code-file structure shall include the following files named:

1. Dlt_Lcfg.h – for link time configurable parameters and
2. Dlt_PBcfg.c, Dlt_PBcfg.h – for post build time configurable parameters and
3. Dlt_cfg.c, Dlt_cfg.h – for pre build time configurable parameters.

These files shall contain all link time and post-build time configurable parameters.⌋ (BSW00344, BSW00404, BSW00345, BSW00419, BSW00381, BSW00383)

[Dlt482] ⌈The module header file Dlt.h shall include Rte_Dlt_Type.h to include the types which are common used by BSW Modules and Software Components. Dlt.h and all Dlt*cfg.h files shall only contain types, that are not already defined in Rte_Dlt_Type.h. ⌋ ()

5.1.2 Header file structure

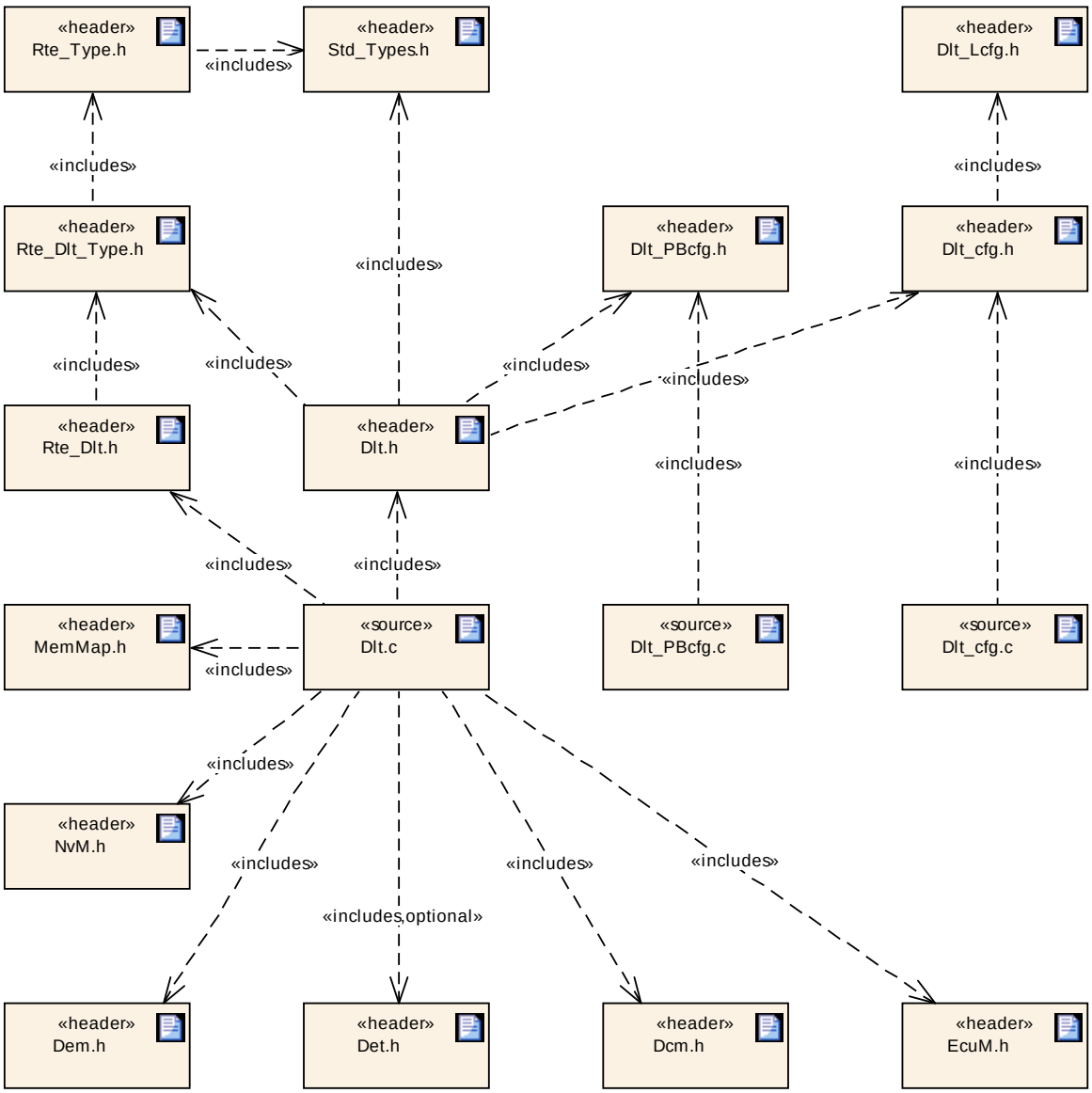

Figure 4 Header file structure recommended for Dlt source

6 Requirements traceability

Requirement	Description	Satisfied by
BSW003	The standardized common published parameters as required by BSW00402 in the General Requirements ...	Dlt510
BSW00307	These requirements are not applicable to this specification.	Dlt511
BSW00314	These requirements are not applicable to this specification.	Dlt511
BSW00318	The standardized common published parameters as required by BSW00402 in the General Requirements ...	Dlt510
BSW00325	These requirements are not applicable to this specification.	Dlt511
BSW00326	These requirements are not applicable to this specification.	Dlt511
BSW00327	Development error values are of type uint8.	Dlt447
BSW00336	These requirements are not applicable to this specification.	Dlt511
BSW00337	Development error values are of type uint8.	Dlt447
BSW00338	The detection of development errors is configurable (ON / OFF) at pre-compile time.	Dlt444, Dlt445, Dlt439
BSW00339	These requirements are not applicable to this specification.	Dlt511
BSW00342	These requirements are not applicable to this specification.	Dlt511
BSW00343	These requirements are not applicable to this specification.	Dlt511
BSW00344	The code file structure shall not be defined within this specification completely.	Dlt456, Dlt239
BSW00345	The code file structure shall not be defined within this specification completely.	Dlt456
BSW00347	These requirements are not applicable to this specification.	Dlt511
BSW00348	These requirements are not applicable to this specification.	Dlt511
BSW00353	These requirements are not applicable to this specification.	Dlt511
BSW00358		Dlt239
BSW00361	These requirements are not applicable to this specification.	Dlt511
BSW00373	These requirements are not applicable to this specification.	Dlt511
BSW00374	The standardized common published parameters as required by BSW00402 in the General Requirements ...	Dlt510
BSW00375	These requirements are not applicable to this	Dlt511

	specification.	
BSW00376	These requirements are not applicable to this specification.	Dlt511
BSW00377		Dlt238
BSW00379	The standardized common published parameters as required by BSW00402 in the General Requirements ...	Dlt510
BSW00381	The code file structure shall not be defined within this specification completely.	Dlt456
BSW00383	The code file structure shall not be defined within this specification completely.	Dlt456
BSW00385	Development error values are of type uint8.	Dlt447
BSW00386	These requirements are not applicable to this specification.	Dlt511
BSW00387	These requirements are not applicable to this specification.	Dlt511
BSW00395	These requirements are not applicable to this specification.	Dlt511
BSW00400	These requirements are not applicable to this specification.	Dlt511
BSW00402		Dlt271
BSW00404	The code file structure shall not be defined within this specification completely.	Dlt456, Dlt239
BSW00405		Dlt239
BSW00407		Dlt239
BSW00409	These requirements are not applicable to this specification.	Dlt511
BSW00413	These requirements are not applicable to this specification.	Dlt511
BSW00414		Dlt437, Dlt239
BSW00416	These requirements are not applicable to this specification.	Dlt511
BSW00417	These requirements are not applicable to this specification.	Dlt511
BSW00419	The code file structure shall not be defined within this specification completely.	Dlt456
BSW00422	These requirements are not applicable to this specification.	Dlt511
BSW00427	These requirements are not applicable to this specification.	Dlt511
BSW00431	These requirements are not applicable to this specification.	Dlt511
BSW00432	These requirements are not applicable to this specification.	Dlt511
BSW00434	These requirements are not applicable to this specification.	Dlt511
BSW00437	These requirements are not applicable to this specification.	Dlt511

BSW00439	These requirements are not applicable to this specification.	Dlt511
BSW005	These requirements are not applicable to this specification.	Dlt511
BSW101		Dlt239
BSW160	These requirements are not applicable to this specification.	Dlt511
BSW161	These requirements are not applicable to this specification.	Dlt511
BSW162	These requirements are not applicable to this specification.	Dlt511
BSW164	These requirements are not applicable to this specification.	Dlt511
BSW168	These requirements are not applicable to this specification.	Dlt511
BSW170	These requirements are not applicable to this specification.	Dlt511
BSW172	The Dlt Module works completely event driven.	Dlt468
BSW35000001	The function Dlt_SendLogMessage() shall be called for providing a log message.	Dlt007, Dlt333, Dlt339, Dlt040, Dlt461
BSW35000002	The messages as described in the Dlt protocol specification (see chapter 7.	Dlt039, Dlt043, Dlt301, Dlt467, Dlt302, Dlt117
BSW35000003	The function Dlt_SendLogMessage() shall be called for providing a log message.	Dlt007, Dlt333, Dlt241, Dlt243
BSW35000004	To be notified of a changing event a SW-C shall provide the system service interface LogTraceSess...	Dlt012, Dlt330, Dlt252, Dlt254
BSW35000005	Dlt shall generate for every service need from a SW-C the function calls for all corresponding Lo...	Dlt289, Dlt345, Dlt426
BSW35000006	Dlt shall provide the Dlt_DetForwardErrorTrace () function for the fan-out capability of Det.	Dlt430, Dlt431, Dlt432
BSW35000007	The log message generated for Dem Events shall have the following payload entries:	Dlt476, Dlt477, Dlt478, Dlt479, Dlt470
BSW35000008	The VFB-Trace works with defines included by the RTE at building time.	Dlt025, Dlt284
BSW35000009	Dlt shall provide the possibility to trace Client-Server communication as well as Sender-Receiver...	Dlt276, Dlt285, Dlt277
BSW35000013	The Dlt message shall consist at least of a Standard Header.	Dlt301, Dlt302, Dlt116, Dlt314, Dlt315
BSW35000014	If the MSBF bit is set, the most significant byte shall be first in payload (big endian format).	Dlt097, Dlt304, Dlt378
BSW35000016	The Standard Header shall consist of the following entries:	Dlt458, Dlt097, Dlt304
BSW35000017	The Standard Header shall consist of the following entries:	Dlt458, Dlt102, Dlt323, Dlt112
BSW35000018	The field Message Counter (MCNT) shall be incremented for every message which is put to the send ...	Dlt084, Dlt458, Dlt319, Dlt105, Dlt106

BSW35000019	The extended Header shall only be attached when the UEH flag is set.	Dlt086, Dlt088, Dlt457, Dlt122
BSW35000020	If the WSID bit is set, the Session ID shall be transmitted.	Dlt101, Dlt322, Dlt110, Dlt457
BSW35000021	The Extended Header shall contain these entries	Dlt457, Dlt127, Dlt128
BSW35000022	The Standard Header shall consist of the following entries:	Dlt458, Dlt098
BSW35000023	If the UEH bit is set, the payload shall adjoin the Extended Header.	Dlt314, Dlt315, Dlt378, Dlt459, Dlt409
BSW35000024	If the UEH bit is not set, the payload shall be interpreted as in non-verbose mode.	Dlt096, Dlt310, Dlt460, Dlt418
BSW35000025	Message ID shall be assigned unique for a single combination of static data.	Dlt352, Dlt400, Dlt420
BSW35000026	The ASAM Fibex Standard (Field Bus Exchange Format) Version 3.	Dlt418, Dlt398, Dlt401
BSW35000027	If non-verbose mode is used the packet format in Table 721 shall be used.	Dlt460, Dlt352, Dlt398
BSW35000028		Dlt207, Dlt208, Dlt221
BSW35000029	During development phase the log and trace communication interfaces may be usable without any sec...	Dlt044, Dlt290, Dlt046, Dlt048
BSW35000030	Dlt shall implement a traffic shaping for its communication interfaces (over Dcm interface [6] an...	Dlt054, Dlt055, Dlt056, Dlt344, Dlt202
BSW35000031	Also for every Context ID / Application ID pair the status of the trace status shall be stored in...	Dlt068, Dlt069, Dlt071, Dlt077, Dlt079
BSW35000032	Control messages are in general normal Dlt messages with a Standard Header, an Extended Header an...	Dlt187, Dlt194, Dlt195, Dlt380, Dlt381, Dlt196, Dlt383, Dlt197, Dlt198
BSW35000033	To be notified of a changing event a SW-C shall provide the system service interface LogTraceSess...	Dlt012, Dlt021, Dlt059, Dlt064, Dlt197, Dlt245
BSW35000034	The Dlt communication module shall implement an interface to a CDD or handle the communication ov...	Dlt040, Dlt042, Dlt043, Dlt461, Dlt462, Dlt463, Dlt250, Dlt251, Dlt272, Dlt273, Dlt263, Dlt264, Dlt265
BSW35000035	An interface between Dlt and Dcm shall be implemented.	Dlt339, Dlt435, Dlt037, Dlt340, Dlt434, Dlt039
BSW35000036	Dlt shall have a temporary C-initialized buffer (init buffer), where only the provided data from ...	Dlt003, Dlt004
BSW35000037	Dlt shall temporarily store a maximum number of log and trace messages in a local buffer, if no c...	Dlt052, Dlt341, Dlt342
BSW35000038	To be notified of a changing event a SW-C shall provide the system service interface LogTraceSess...	Dlt012, Dlt330, Dlt058, Dlt059, Dlt252, Dlt254
BSW35000039	If the configuration parameter DltImplementNVRamStorage is set, Dlt shall implement the possibili...	Dlt287, Dlt073, Dlt074, Dlt076, Dlt077, Dlt452, Dlt453, Dlt288
BSW35000040	To be notified of a changing event a SW-C shall provide the system service interface LogTraceSess...	Dlt012, Dlt330, Dlt065, Dlt067, Dlt068, Dlt347, Dlt071

BSW35000041	Dlt (Diagnostic Log and Trace) is a basic software module, which handles and stores log and trace...	Dlt464
BSW35000042	Dlt shall be available in development and in production phase.	Dlt466, Dlt465
BSW35000044	If the UEH bit is not set, the Extended Header shall not be transmitted after the Standard Header.	Dlt303, Dlt119, Dlt459, Dlt421, Dlt135

7 Functional specification

[Dlt464] ⌈Dlt (**Diagnostic Log and Trace**) is a basic software module, which handles and stores log and trace messages produced by SW-C it self or the interactions between SW-C and RTE/VFB and by the Basic Software Modules Dem and Det. The log and trace messages are generated by calling APIs provided by the Dlt module.⌋ (BSW35000041)

[Dlt466] ⌈Dlt shall be available in development and in production phase.⌋ (BSW35000042)

7.1 Dlt term definition

This chapter describes the parameters and content of a log and trace message and additional terms.

7.1.1 Log and trace message

A log and trace message contains all data and options to specify a log and trace event in a software. The log and trace message internally consist of a header and payload.

7.1.2 User

The user of Dlt is the programmer of the software, which uses the Dlt API to generate log and trace messages.

7.1.3 Log

The user generates log messages on demand. Each time the user wants to show some information about state changes or value changes, he adds an API call to Dlt.

7.1.4 Trace

Trace messages can be generated by instrumentation of the code (e.g. VFB traces). The instrumented code calls the API of Dlt.

7.1.5 ECU ID

ECU ID is the name of each ECU composed by four 8 bit ASCII characters for example ABS0 or COMB. If not all four characters are used the remaining characters shall be filled by null.

7.1.6 Session ID

Session ID is the identification number of a log or trace session. A session is the logical entity of the source of log or trace messages. If a SW-C is instantiated several times a new session with a new Session ID for every instance is used. A SW-C additionally can have several log or trace sessions if it has several ports opened to Dlt.
Since Session ID is not specified in AUTOSAR for SW-C the port defined argument values (see chapter 7.6.4) shall be used for this number. For BSW modules Dem and Det it is the module Id.

7.1.7 Application ID

Application ID is a abbreviation of the SW-C/BSW modules Dem and Det. It identifies the SW-C/BSW module in the log and trace message. It is composed by four 8 bit ASCII characters for example Det, Dem or ABS. If not all four characters are used the remaining characters shall be filled by null.

7.1.8 Context ID

Context ID is a user defined ID to group log and trace messages produced by a SW-C/BSW modules Dem and Det to distinguish functionality. Each Application ID can own several Context IDs. Context ID's are grouped by Application ID's. Context IDs shall be unique within an Application ID.
The identification of the source of a log and trace message is done with a pair of Application ID and Context ID.
It is composed by four 8 bit ASCII characters. If not all four characters are used the remaining characters shall be filled by null.

7.1.9 Message ID

Messaged ID is the ID to characterize the information, which is transported by the message itself. A Message ID identifies a log or trace message uniquely. It can be used for identifying the source (in source code) of a message and it can be used for characterizing the payload of a message. A message ID is statically fixed at development or configuration time.

7.1.10 Log level and trace status

A log level defines a classification for the severity grade of a log message.

The trace status provides information if a trace message should be send.
Time

Each log and trace message may contain a time attribute. The time attribute is a free defined time-value. It is the time since the start of the ECU. (see 7.6.8.1 and 7.7.3.6)

7.1.11 Payload

The Payload contains the message ID and user defined information of a log and trace message.

7.1.12 External client

An external client is a tool, which can be run on a PC or another ECU, which is connected to Dlt over Dcm [6] or over the Dlt communication module.

7.2 Use Cases for logging and tracing with Dlt

7.2.1 Use Case general logging with Dlt

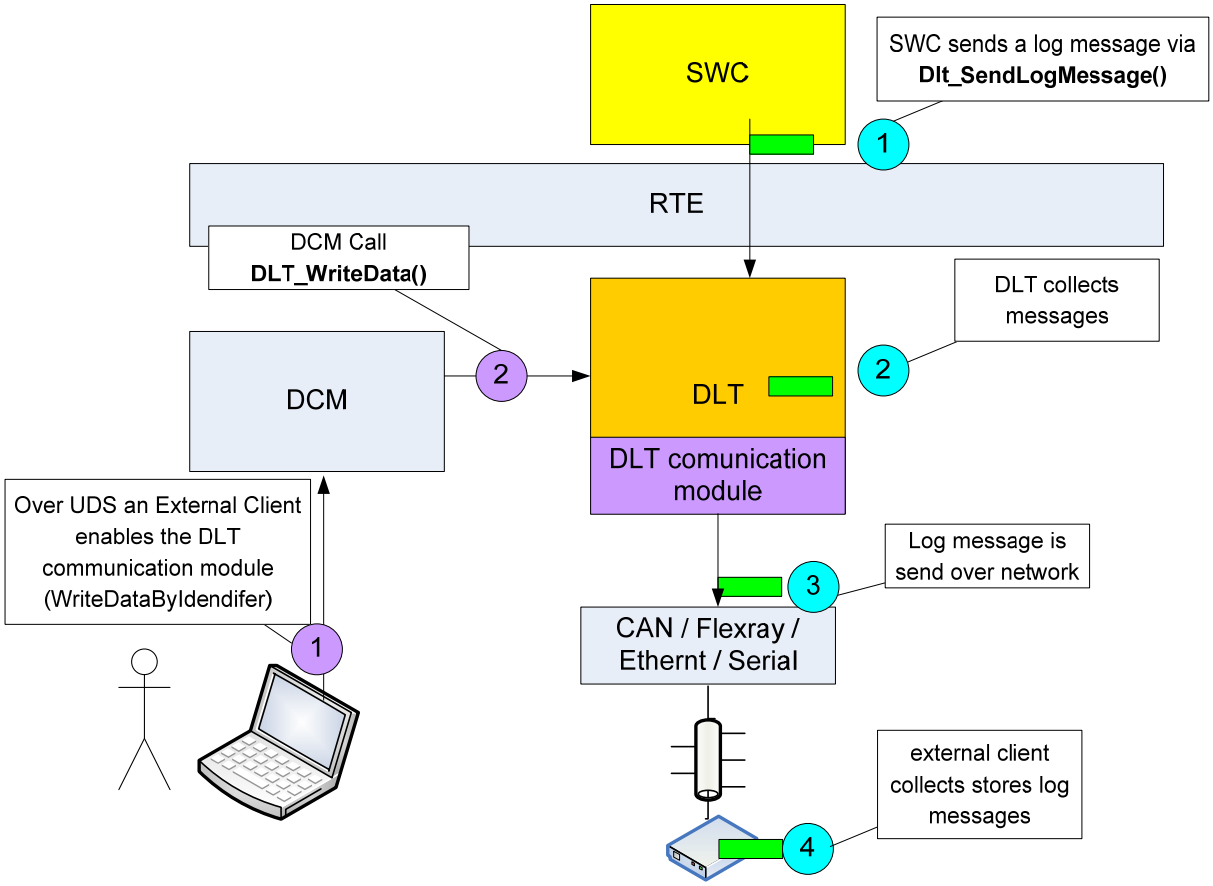

Figure 5: Use Case general logging with Dlt

The Dlt communication module is enabled by an external client. The external client has to set up a diagnostic session in a defined security level and sending control message to Dlt for enabling the Dlt communication module. A SW-C is generating a log message. The log message is sent to Dlt by calling the API provided by Dlt. Dlt sends the log message to the implemented Dlt communication module interface.

7.2.2 Use Case logging over UDS with Dlt

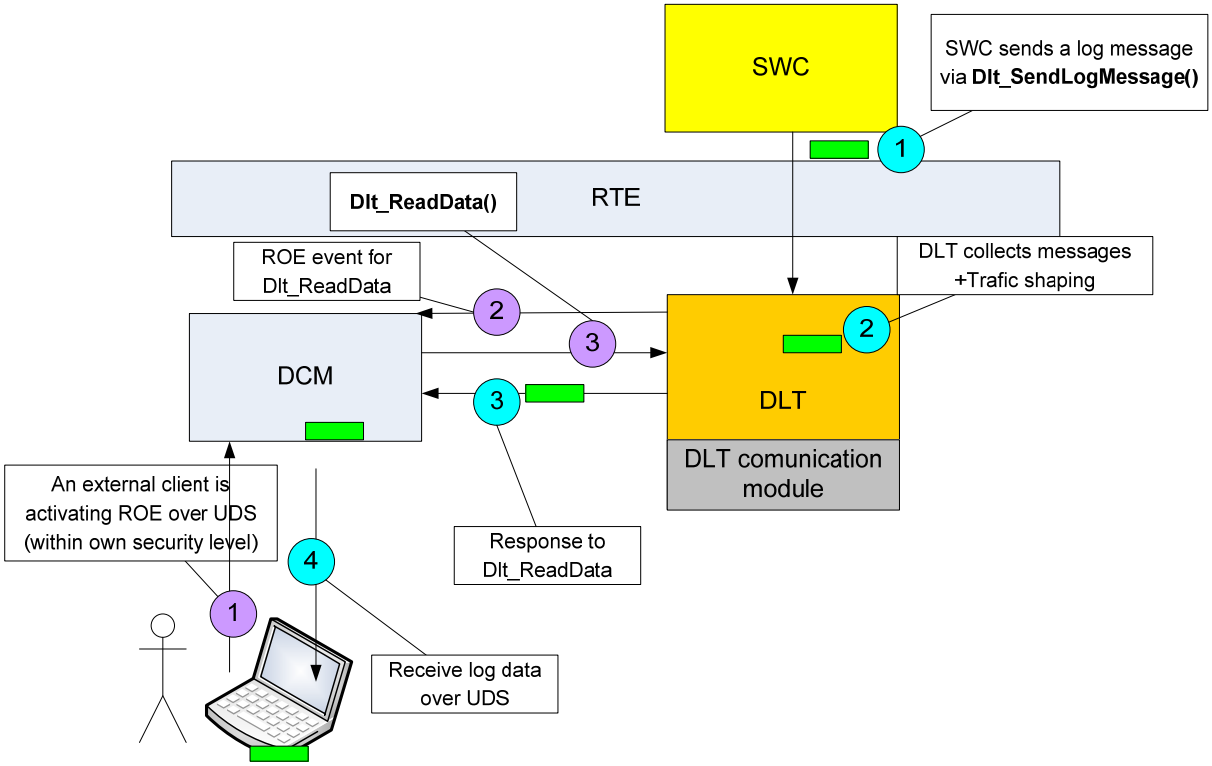

Figure 6: Use Case logging over UDS with Dlt

An external client enables the communication by setting up a diagnostic session in a defined security level. A SW-C is generating a log message. The log message is sent to Dlt by calling the API provided by Dlt. Dlt sends the log message over Dcm to the external (diagnostic) client.

7.2.3 Use Case tracing of VFB

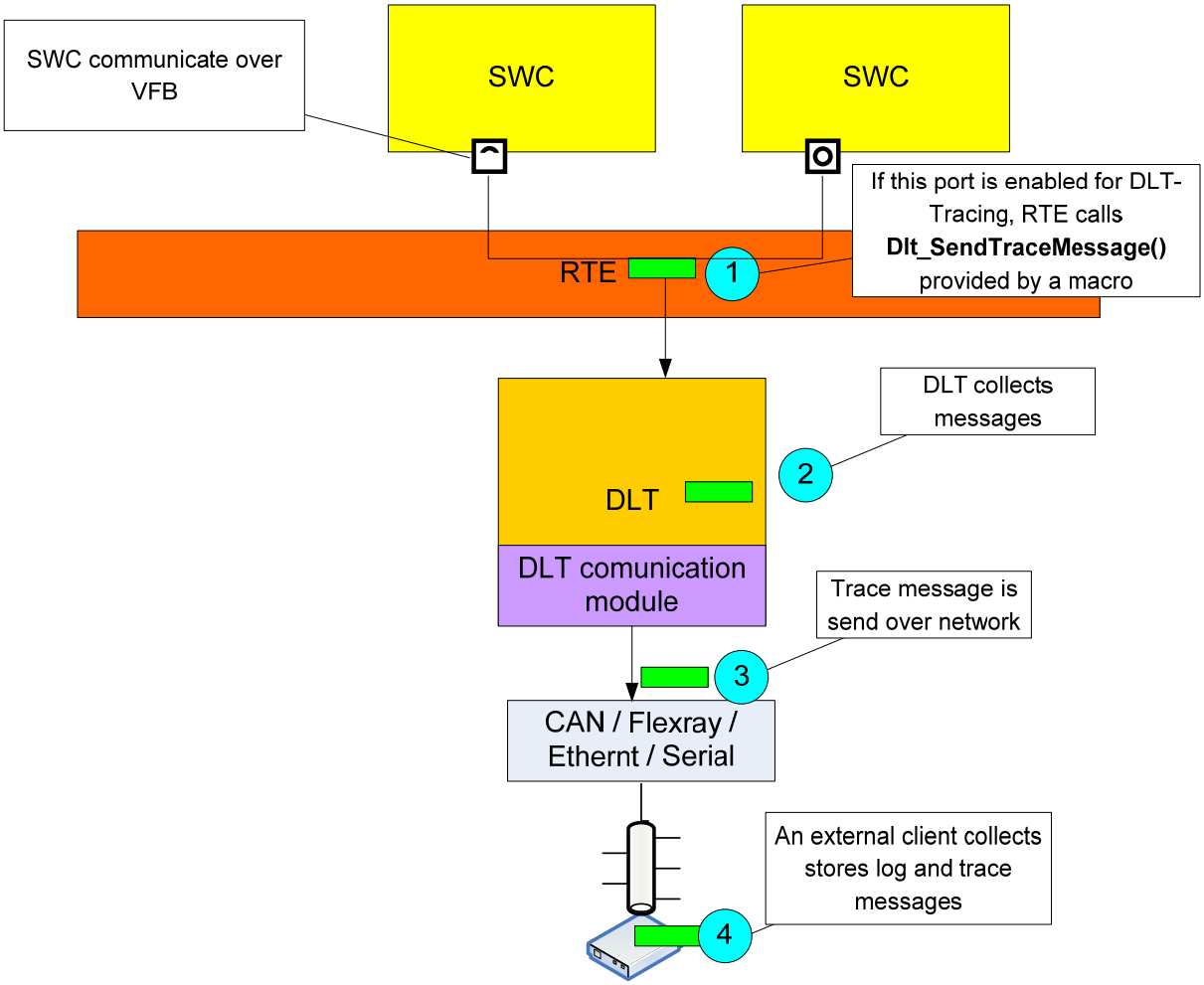

Figure 7: Use Case tracing of VFB

RTE calls the macro provided by Dlt, which calls the Dlt API generating the trace message. Dlt sends the trace message to the implemented Dlt communication module interface. The Dlt communication module forwards the trace message to the network. An external client receives and stores the trace messages from Dlt.

7.2.4 Use Case runtime configuration of Dlt

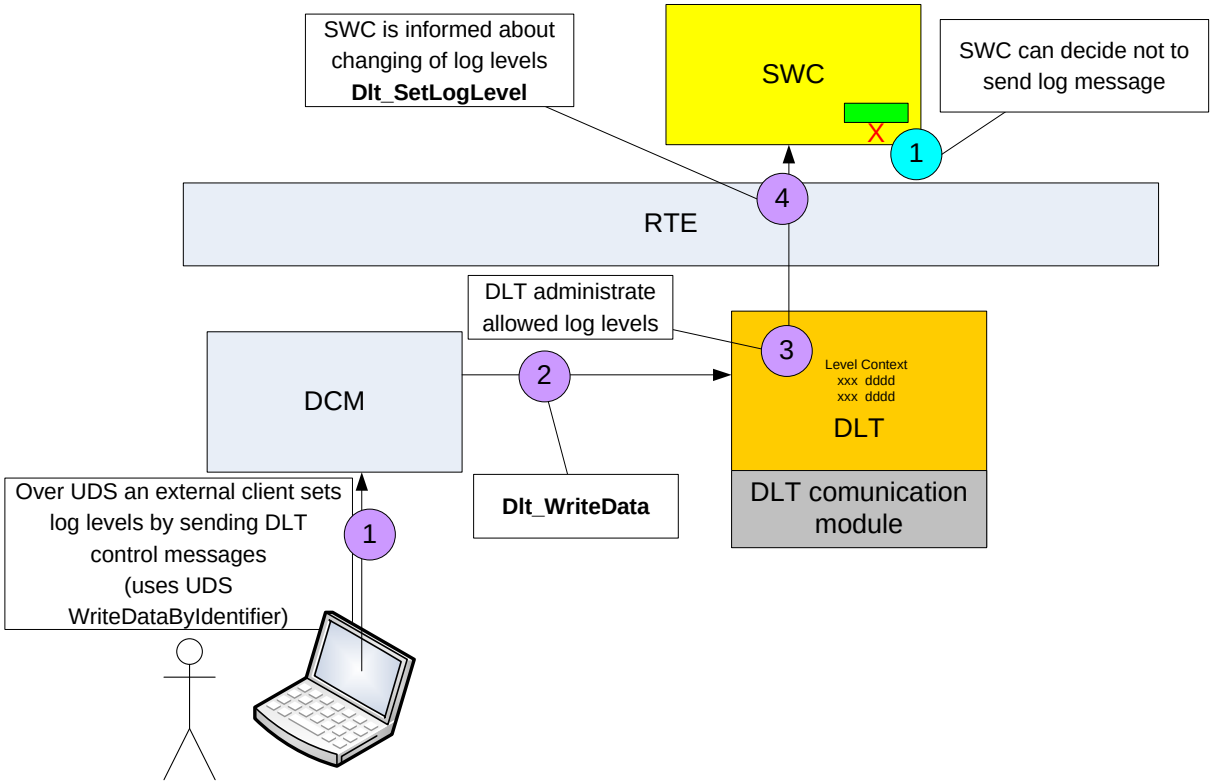

Figure 8: Use Case runtime configuration of Dlt

An external (diagnostic) client enables the communication by setting up a diagnostic session in a defined security level. The external client sets the log and trace level in Dlt. Dlt invokes the client-server interface of the SW-C to inform the SW-C about the new log level.

7.2.5 Use Case Dlt interaction only over Dlt communication module

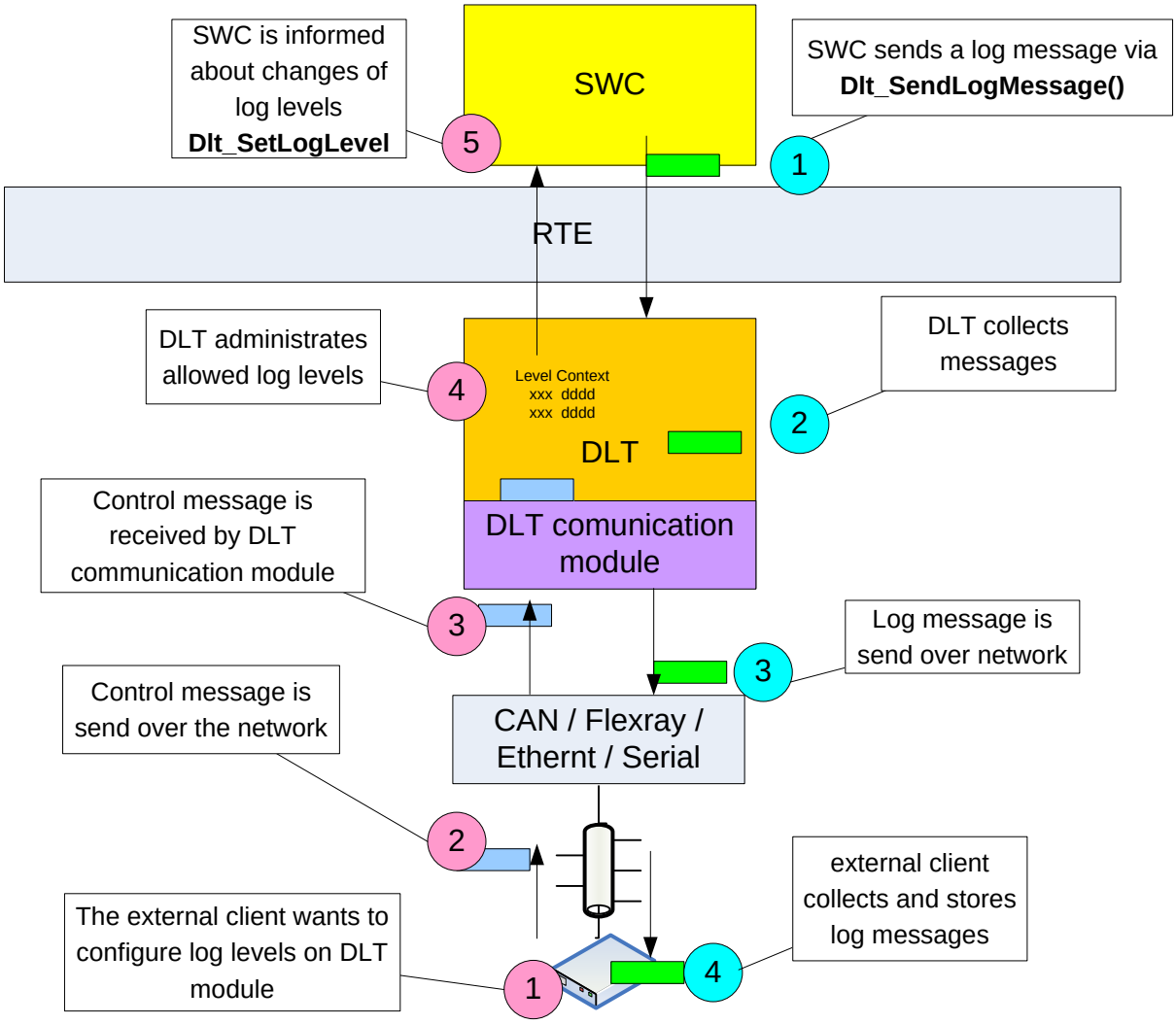

Figure 9: Communication of an external client only over the Dlt communication module

En external client is connected over a standard network/interface of the ECU to the Dlt. In this case not the UDS interface over the Dcm is used and a high bandwidth interface of the ECU can be used. The external client sends some control messages to the Dlt module to configure some log levels. In the other direction the Dlt sends log or trace messages to the external client.

7.3 Internal behavior of Dlt Module

7.3.1 Overview

The Dlt module communicates with the software modules, which generate the log and trace messages, and with the external client used by an operator. Different phases of a software life cycle (developing and production) shall be considered.

The Dlt module shall support the various functionality in the different operating modes of the ECU (start-up, runtime, shutdown).
The following figure shows a very high-level architecture for the component. This architecture is only a logical representation.

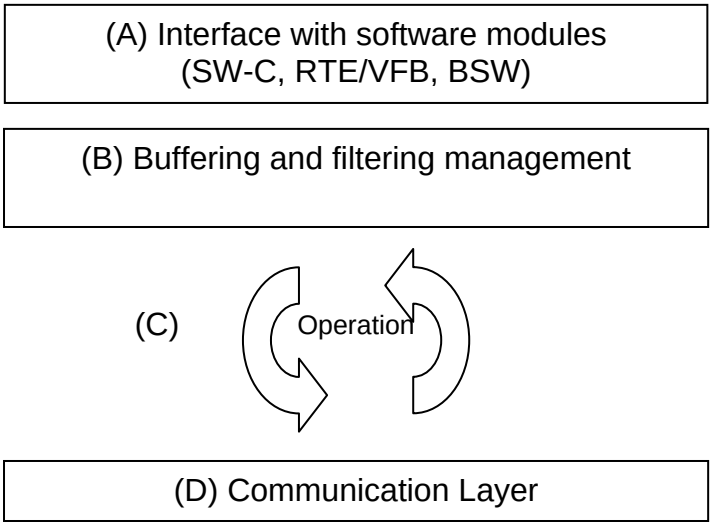

Figure 10 Overview Dlt module logical representation

(A) provides the interface used by the software module (SW-Cs, BSW modules) to generate the log and trace message.
(B) manages the buffering of the messages received by SW-Cs or BSW modules before they are sent over the network to the external client. Also the implementation of additional filtering is done by this module.
(C) is the core of Dlt which has to communicate with the external client to engage the necessary actions for driving the behavior of Dlt itself. This component has multiple objectives:

4. interpret and implement the commands from the external client
5. extracting the messages from the buffer to be sent to the external client
6. manage the application protocol to transport the log and trace message to the external client.

(D) represents the functionality of Dlt for communication with the external client.

7.3.1.1 Buffer strategy

The Dlt module shall implement a buffer management to solve the following issues:

- the rate of receiving log and trace messages by the SW-Cs is temporary faster than the communication channels available bit rate
- to store some log and trace messages if no external client is connected

The overall definition of the characteristic of the buffer and its management policy are up to the implementation.

[Dlt490] ⌈Dlt control messages (see 7.7.7.1) should be handled separately. If any control messages are to send, this messages should be send before any normal log/trace message.⌋ ()

7.3.1.2 Runtime configuration

Dlt provides the functionality for an external client to change the log level or trace status of the registered Context IDs and Application IDs. It shall be secured by running a diagnostic session.

As explained in chapter 7.3.3.1.6 each SW-C has to register it's Context ID's and Application IDs. Dlt sets up a table of all registered pairs of Application IDs and Context ID. At every message reception, the Dlt module shall check the log level of the provided messages (see 7.6.5). If the log level of the message is in the pass through range, the message will be forwarded to the external client.

Example of pass through range:
The pass through range is the range of log levels of log messages to forward to an external client. For example the pass through range is set to log level 0 to log level 4, all messages with in log level 0-4 are passed all other (5-7) are rejected.

Runtime configuration of Dlt means, that the pass through range shall be modifiable at runtime.

7.3.2 Startup and Shutdown behavior

Dlt is using the NVRamManager and is to be initialized very late in the ECU startup phase. The Dlt_Init() function should be called after the NVRamManager is initialed.

Because of BSW modules Dem and Det may send log messages to Dlt before Dlt is initialized, Dlt shall handle this data in accurate way.

[Dlt003] ⌈Dlt shall have a temporary C-initialized buffer (init buffer), where only the provided data from the Dlt_SendLogMessage are stored. The size of this buffer is configurable with DltInitBufferSize.⌋ (BSW35000036)

NOTE: After initialization, it is possible to re-use the buffer within the normal message buffer or to use the normal message buffer as temporary buffer before initialization.

[Dlt004] ⌈Only if Dlt is not initialized, Dlt shall store these data in the init buffer. When the init-routine is called this init buffer shall be read and the stored data encapsulated in a complete log and trace message shall be forwarded to the Dlt message buffer.⌋ (BSW35000036)

[Dlt005] ⌈If Dlt module is initialized, the incoming data from BSW modules shall be directly encapsulated in a log and trace message and forwarded to the Dlt message buffer.

Because at ECU startup before Dlt initialization a correct time is not available the following behavior should be implemented.⌋ ()

[Dlt483] ⌈The timestamp field (TMSP) of the transferred log or trace message (see 7.7.3.6) for all log or trace messages transferred from the init buffer to the Dlt (see **[Dlt004**) shall be zero (0x0).⌋ ()

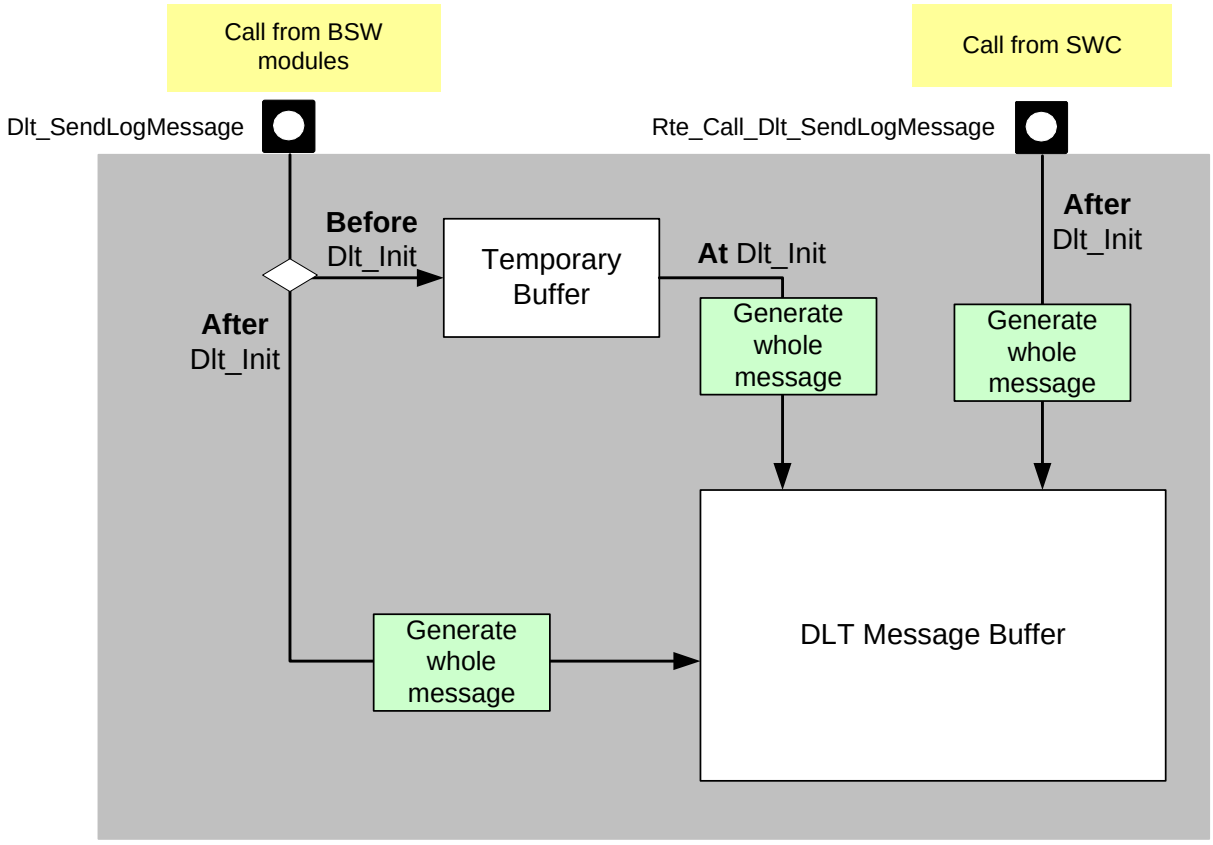

Figure 11 For system startup Dlt shall have a temporary buffer where incoming messages from BSW modules con be stored.

7.3.3 Communication with producer of log and trace messages

There are two kinds of communication with the Dlt module. The connection between the ECU and the external client can be a communication interface like Ethernet or a serial line, a standard CAN or FlexRay interface with reserved messages for Dlt communication or at least a connection over the OBD-Diagnostic connector of the vehicle with the UDS protocol.
There are different communication scenarios. On one side the Dlt module collects log and trace messages from the SW-Cs on the other side Dlt shall transport the log and trace messages to an external client, which can store these data permanently.
Additionally for changing the log levels at runtime, Dlt shall receive commands from an external client.

7.3.3.1 Communication with SW-C

The goal of Dlt is to collect log and trace messages. In the view of a SW-C, it shall provide an interface for SW-Cs for explicitly sending log or trace messages.
This interface shall be a ClientServerInterface, where the Dlt module provides the port (it is the server). All SW-Cs can call the DltService port to forward log or trace messages to the Dlt module.

[Dlt007] ⌈The function `Dlt_SendLogMessage()` shall be called for providing a log message.⌋ (BSW35000001, BSW35000003)

[Dlt333] ⌈The `Dlt_SendTraceMessage()` shall be called for providing a trace message by a SW-C.

Every call from the SW-C to Dlt contains an assigned Application ID and Context ID. This pair of IDs ensures the correct reassignment to a specific part of an application.
Dlt itself assigns to every pair a log level or a trace status for filtering the messages at receiving time.

Each SW-C shall register all pairs of Application- and Context IDs to Dlt. Because Dlt shall handle specific log levels and trace status for several Application IDs and Context IDs (see 7.3.3.1.2 and 7.3.3.1.6) it is important for Dlt to know the corresponding Application and Context IDs for each connected port interface.⌋ (BSW35000001, BSW35000003)

7.3.3.1.1 Sending messages to Dlt

[Dlt009] ⌈For sending log or trace messages from a SW-C to Dlt every time an Application ID and Context ID shall be assigned to the message.⌋ ()

[Dlt295] ⌈For reducing the overall system load, SW-Cs shall check (before sending a log message to Dlt), that the log level of the Context ID is the same or a higher log level as in the message.

The `Dlt_SendLogMessage()`interface is the logging interface for SW-Cs. Here a software developer (user of Dlt) can explicitly provide some information for logging the SW-C's behavior.⌋ ()

[Dlt010] ⌈Within a log message, a log level shall be provided. Possible values of log levels are:

DLT_LOG_FATAL	fatal system errors, should be very rare
DLT_LOG_ERROR	errors occurring in a SW-C with impact to correct functionality
DLT_LOG_WARN	log messages where a incorrect behavior can not be ensured

DLT_LOG_INFO	log messages providing information for better understanding the internal behavior of a software
DLT_LOG_DEBUG	should be used for messages which are only for debugging of a software usable
DLT_LOG_VERBOSE	log messages with the highest communicative level, here all possible states, information and everything else can be logged

Table 7-1 Log levels defined, most important is DLT_LOG_FATAL and less important is DLT_LOG_VERBOSE

⌋()

[Dlt011] ⌈The Dlt_SendTraceMessage() function may be in production phase a dummy function.

Trace messages can be something like a trace of starting and returning a function or tracing variables at some points and so on. In a SW-C the code can be instrumented automatically by some tools for providing a trace in significant manner. These tools are used for generating e.g. code coverage or function coverage and so on.⌋()

[Dlt296] ⌈For these purposes, the following trace events shall be used:

DLT_TRACE_VARIABLE	for tracing the value of a variable
DLT_TRACE_FUNCTION_IN	for tracing the calling of a function
DLT_TRACE_FUNCTION_OUT	for tracing the returning of a function
DLT_TRACE_STATE	for tracing a state of a state machine

Table 7-2 Trace info for providing a trace message

⌋()

7.3.3.1.2 Notifying SW-C about change of log level or trace status of a Context ID

The log level or trace status of a Context ID can change at runtime.

[Dlt012] ⌈To be notified of a changing event a SW-C shall provide the system service interface `LogTraceSessionControl`.

The Dlt module shall know the relation between the Session ID (the port defined argument value) and the specific `LogTraceSessionControl` interface of a SW-C.

This relation is specified at configuration time and can be extracted from the specific port interface of a SW-C/runnable (see chapter 7.6.4.1.).

Each SW-C shall provide such an interface if it uses the Dlt service. It shall store the state of the log level and trace status locally. Before a call to `Dlt_SendLogMessage()or Dlt_SendTraceMessage()`is done the stored log level shall be checked. The call shall only be done if the log level of the message to be sent is the same or a more important log level. This is for reducing consumption of ECU performance.(see Figure 12)⌋ (BSW35000004, BSW35000033, BSW35000038, BSW35000040)

[Dlt330] ⌈If a log level or trace status of a specific pair of Application ID and Context ID changes, Dlt shall notify the registered SWS/runnable through out the corresponding interface.⌋ (BSW35000004, BSW35000038, BSW35000040)

[Dlt331] ⌈The function to call shall be taken from the table specified in chapter 7.6.4.1.

This function is not a direct call to the SW-C's interface. It is a call to the RTE with the RTE API Rte_call_XXX (the correct linker symbol is something like Rte_call_XXX). The RTE forwards the call to the SW-C/runnable.

For a description of managing pairs of Application ID and Context ID and its corresponding log levels see chapter 7.6.4.

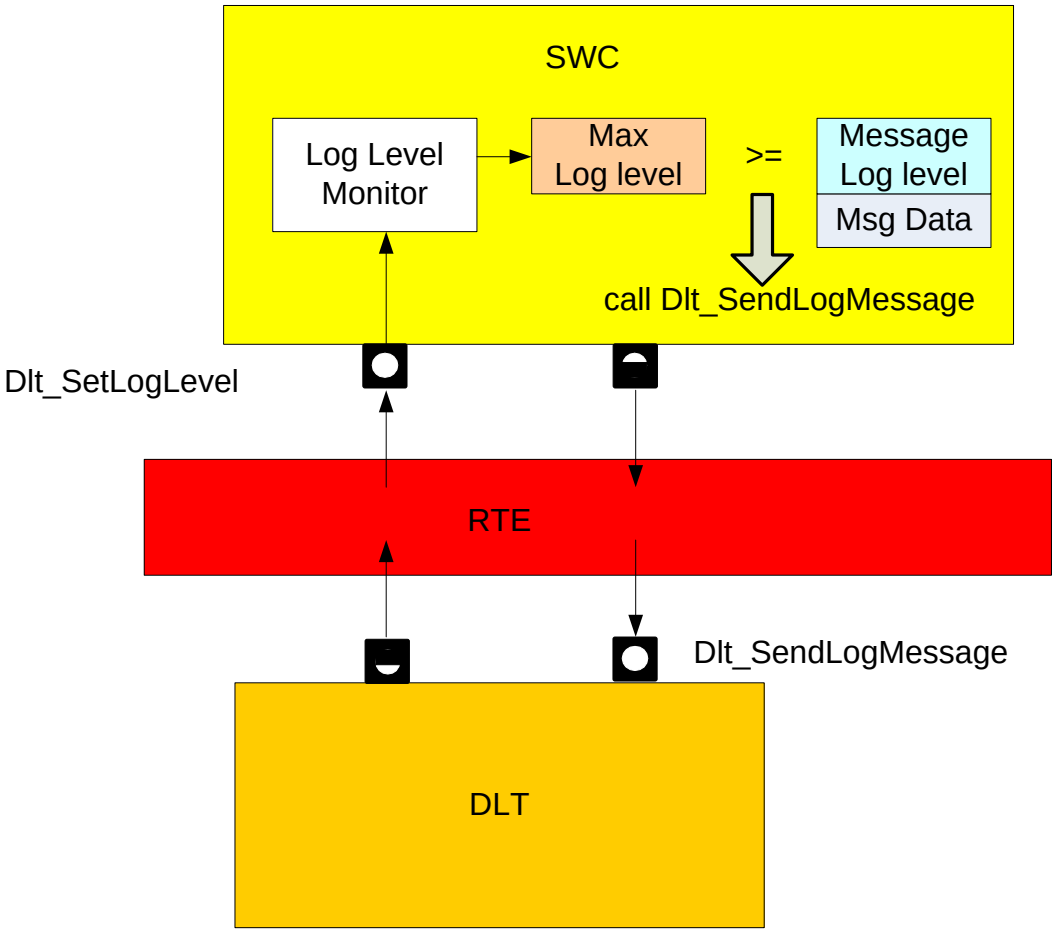

Figure 12 SW-C shall be aware of the status of log level and trace status

⌋()

7.3.3.1.3 Message Filtering by SW-C

All SW-Cs shall check their log level or trace status of a Context ID and Application ID pair. A SW-C/runnable shall hold the maximum allowed log level and the enable flag for tracing, for a given pair of Application ID and Context ID. Before a message is sent to Dlt, these values shall be checked and only if the log level of the message is in the pass-through range, the message shall be send.

```
if (message_log_level <= max_log_level){
     Dlt_SendLogMessage(…);
}
```

Figure 13 Code sample for SW-C to check the log level of the message before call of Dlt_SendLogMessage

If a SW-C doesn't check the log level of a log message, the log message is send to Dlt. Then if the feature DltImplementFilterMessages is enabled, the message is filtered by the Dlt again. If this feature is not enabled, the message is transmitted to the external client (if connected).
So it is up to the developer to implement this feature. If he do not want to filter messages in the SW-C he can enable the feature DltImplementFilterMessages and the Dlt will do the filtering. But this increases ECU load.

7.3.3.1.4 Notifying SW-C about switch between Verbose Mode and Non Verbose Mode

If on an ECU the Verbose Mode is supported, the SW-C shall be informed when Dlt switches between Non Verbose Mode and Verbose Mode. Because of the payload provided by a call to Dlt_SendXXXMessage is either in Verbose Mode or Non Verbose Mode.

[Dlt014] ⌈It shall be possible to enabled or disabled this feature via the configuration Parameter DltImplementVerboseMode.⌋()

[Dlt015] ⌈Dlt shall call the interface VerboseModeControl with the function Dlt_SetVerboseMode of each registered SW-C/runnable if the state of verbose mode changes.
The identification of the correct port to call by Dlt shall work in the same way as it works by calling Dlt_SetLogLevel (see 7.3.3.1.2, 7.3.3.1.7 and 7.6.4.1).⌋()

[Dlt016] ⌈In the case of implementing this feature, the tables specified in 7.6.4.1 shall be expanded with the pointer to the provided functions by the RTE. (The RTE forwards the call to the SW-Cs)⌋()

7.3.3.1.5 Injection of function calls in SW-C from Dlt

This functionality is for injection function calls in SW-Cs. This shall only be used for testing issues. The intention for this feature is an extended testing procedure where some special functions in the SW-C are provided for triggering some testing procedures.

[Dlt017] ⌈This feature shall be enabled and disabled via the configuration parameter DltImplementSWCInjection.⌋ ()

[Dlt018] ⌈Dlt calls the interface InjectionCallback of each registered SW-C/runnable. The identification of the correct port to call by Dlt shall work in the same way as it works by calling Dlt_SetLogLevell (see 7.3.3.1.2, 7.3.3.1.7 and 7.6.4.1).⌋ ()

[Dlt019] ⌈The function to call by Dlt is Dlt_InjectCall (the correct linker symbol is something like Rte_call_XXX). In the case of implementing this feature, the tables specified in 7.6.4.1 are to expand with the pointer to the provided functions by the RTE.⌋ ()

7.3.3.1.6 Registering Context IDs and Application IDs to Dlt

Dlt shall handle a log level and a trace state for every pair of Context ID and Application ID. To know what pairs are defined in an ECU a SW-C shall register this pairs at runtime to the Dlt module. Because of the developing of SW-C shall not be object of this specification the Dlt module shall collect this information at runtime. In addition a dynamic registration supports the possibility to see which SW-C/runnable is active and which not.
When a SW-C is calling the `Dlt_RegisterContext()`method of the DLTServicel interface, a port defined argument value is provided (SessionID) to the Dlt module.
The value of this port defined argument corresponds to LogTraceSessionControl interface of the SW-C/runnable for providing information about the changing of a log level to the SW-C/runnable.

[Dlt021] ⌈Dlt shall remember the relation between the registered Application ID + Context ID and the port interface where this pair is registered.⌋ (BSW35000033)

7.3.3.1.7 Port Defined Argument Values and LogTraceSessionControl interface

For every function call of Dlt_SendLogMessage, Dlt_SendTraceMessage and Dlt_RegisterContext a Port Defined Argument Value shall be provided.

[Dlt022] ⌈This Port defined Argument Values shall be used by Dlt as session identifiers.

A session is the part of a SW-C for which a log level monitor (see Figure 12) is responsible. For each log level monitor the same session number (Port Defined Argument Value) shall be used.⌋ ()

[Dlt023] ⌈The port defined argument value corresponds to the defined Session ID (in this document). The value shall start at 0x1000 (for BSW modules the module ID is taken, starts at 0x0).⌋ ()

[Dlt332] ⌈For connecting a Dlt Service Port to a SW-C the port defined argument value is incremented every time. Therefore, the value is of 0x1000 + n, where n is a continuous number.⌋ ()

7.3.3.2 VFB-Trace

In contrast to the communication with SW-Cs the meaning of trace is different here. The VFB-Trace is specified in RTE [9] and VFB [10]. This chapter describes the interaction of the Dlt module with the VFB-Trace and the internal control of the trace data.
The meaning VFB-Trace is an implicit (system inherent) forwarding of SW-C communication data (which flows over the RTE) to the Dlt module. Trace means in this case that no explicit call by the SW-C is made to forward this data to Dlt.

[Dlt024] ⌈All explicit communication mechanism used by a SW-C shall be traceable by Dlt. These are data, transported over a Client-Server-Port or a Sender-Receiver-Port.⌋ ()

[Dlt334] ⌈In addition the implicit communication over a Sender-Receiver-Port shall be traceable.⌋ ()

7.3.3.2.1 Interfaces provided by Dlt for VFB-Trace

VFB-Trace needs from the Dlt module the header file Dlt_Rte_Hook.h. In this file Dlt tells the RTE which traces to enable. This works simply by providing some #defines in this header file. Each define stands for a separate hook function in the VFB-Trace. This hook function is than called by the RTE if the corresponding RTE-API is called. The hook function it self is provided by the Dlt module.
To ensure the correct prototype of this function the RTE module exports all expected prototypes in it BSW-ModulDescription.

[Dlt025] ⌈The VFB-Trace works with defines included by the RTE at building time. These defies shall be provided by Dlt in the file Dlt_Rte_Hook.h.⌋ (BSW35000008)

[Dlt284] ⌈Dlt shall be compliant to the VFB-Trace described in the AUTOSAR_RTE_SWS [9].⌋ (BSW35000008)

[Dlt276] ⌈Dlt shall provide the possibility to trace Client-Server communication as well as Sender-Receiver communication. The RTE – API functions Rte_Send, Rte_Write, Rte_Receive, Rte_Read, Rte_call and Rte_Result shall be support at least.⌋ (BSW35000009)

[Dlt026] ⌈Every signal or event which shall be traceable by Dlt shall be configured at configuration time. The so called event-name in VFB Trace or function name for each trace event is provided in the configuration container DltVfbTrace within the configuration parameter `DltVfbTraceFunction`.⌋ ()

[Dlt027] ⌈Dlt shall provide the implementation of the hook functions for every configured event given by DltVfbTraceFunction in the file Dlt_Rte_hook.c⌋ ()

[Dlt335] ⌈The prototype of this function is to take from the BSW-ModulDescription of the RTE.⌋ ()

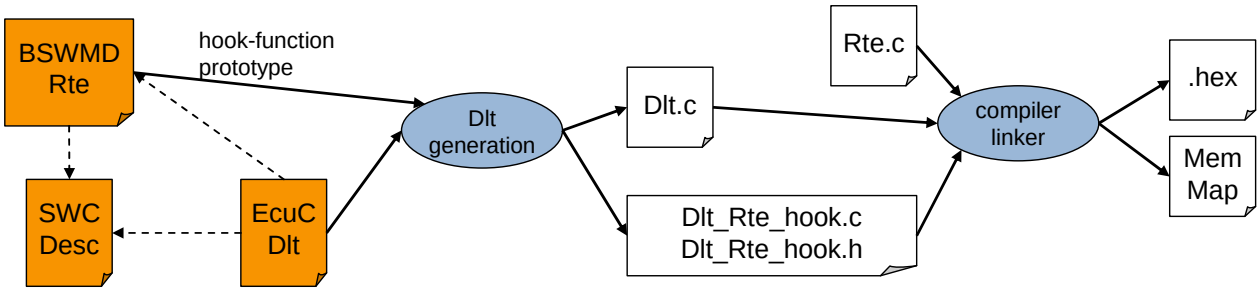

Figure 14 Dependencies and generation process for VFB-Trace implementation in Dlt.

7.3.3.2.2 Generating hook functions

[Dlt285] ⌈Because of the interface Dlt_SendTraceMessage is a SW-C interface, a internal function which is equivalent to Dlt_SendTraceMessage shall be implemented to call by the generated hook functions.⌋ (BSW35000009)

[Dlt277] ⌈In the hook function the internal representation of Dlt_SendTraceMessage shall be called. This call shall be in non verbose mode.⌋ (BSW35000009)

[Dlt278] ⌈The payload for this call shall be filled with the arguments provided by the hook function. All data transported with the arguments shall be provided.⌋ ()

[Dlt336] ⌈If pointers to structures are given, the structure shall be interpreted and send to the internal representation of Dlt_SendTraceMessage.

For more information about the contents of the arguments the information from the corresponding SW-C Description can be taken. This is to find with the event name over the ECU configuration.⌋ ()

[Dlt279] ⌈Every hook function shall get its own Context ID.
In some cases some events can be bundled to the same Context ID. This shall mostly be done if e very large number of signals are to trace.⌋ ()

[Dlt337] ⌈The Application ID shall be “VFBT” ⌋ ()

[Dlt484] ⌈Message Type (MSTP) entry in the generated trace message shall be DLT_TYPE_NW_TRACE, the Message Trace Info (MSTI) entry in this case shall be DLT_NW_TRACE_IPC.⌋ ()

[Dlt280] ⌈Because of non-verbose mode is used, a unique Message ID shall be generated for each call to Dlt_SendTraceMessage.⌋ ()

[Dlt338] ⌈Additionally the description (see 7.7.5.1.3) for this Message ID - payload shall be generated and provided.
This description can be generated from the SW-C description file, were the interface is described.⌋ ()

[Dlt281] ⌈In each hook function the trace status of the Context ID shall be checked.

```
if (vfb_actual_trace_status_contextXY){
     Dlt_SendTraceMessage(…);
}
```

Figure 15 Requirement for hook function to check the trace status of the Context ID before call of Dlt_SendTraceMessage (`vfb_actual_trace_status_contextXY` is a freely named variable to hold the actual trace status for a specific Context ID)

Dlt shall handle for every VFB-Trace hook function an own Context ID and for that reason Dlt shall handle for every VFB-Trace Context ID a separate trace status. This can be done with a separate variable (compare vfb_actual_trace_status_contextXY in Figure 14) ⌋ ()

[Dlt283] ⌈A separate function shall be implemented to modify the trace status of VFB-Trace hook functions. This function shall be harmonized with the SW-C LogTraceSessionControl interfaces (see chapter 7.6.4) ⌋ ()

7.3.3.3 Log Messages from BSW-Modules Dem and Det

For a better understanding of system behavior in the case of a system error, the BSW modules Dem and Det shall forward incoming reported events to the Dlt module.
The Dem in this case shall notify Dlt if the status of events changes. The Det shall forward reported development errors to the Dlt module.

7.3.3.3.1 Log Messages from Dem

Dem [5] stores internally events generated by SW-Cs and BSW modules. These events are characterized by event IDs.
To an event in Dem belonging some additional information. This are a Diagnostic Trouble Code (DTC), Extended Data Records and a Freeze Frame. Each time the state of an event changes Dem calls the Dlt_DemTriggerOnEventStatus() function to notify Dlt of this change.

[Dlt474] ⌈Dlt shall provide the function Dlt_DemTriggerOnEventStatus.

Dem provides within this function the EventID of the event which status has changed. With this EventId Dlt shall request additional information about the event.⌋ ()

[Dlt475] ⌈In Dlt_DemTriggerOnEventStatus Dlt shall compare the EventStatusOld an EventStatusNew. If the event status is not the same Dlt shall build a Dlt log-message with the status of this event and send it by calling internally Dlt_SendLogMessage().⌋ ()

[Dlt476] ⌈The log message generated for Dem Events shall have the following payload entries:

Number	***Type***	***Name***	***Description***
1	uint32	EventId	the EventId
2	uint32	DTCOfEvent	the DTC of the Event
3	RAW	EventExtendedDataRecord	all extended data records
4	RAW	EventFreezeFrameData	the most resent FreezeFrame

Table 7-3 The payload attached the log message generated for an event change by Dem (See 7.7.5 Payload and 8.4.2.1 Dlt_SendLogMessage)

⌋ (BSW35000007)

[Dlt377] ⌈The ApplicationID, ContextID and MessageID of the send log message shall have the following values:

ApplicationID = “DEM”
ContextID = “STD0”
MessageID = 0x00000001

⌋()

[Dlt477] ⌈The DTCOfEvent entry from **[Dlt476]** shall requested from the Dem by calling the function Dem_GetDTCOfEvent() on Dem with the EventId provided in Dlt_DemTriggerOnEventStatus() and DTCKind “all DTCs”.⌋ (BSW35000007)

[Dlt478] ⌈The EventExtendedDataRecord entry from **[Dlt476]** shall be filled by calling the Dem_DltGetAllExtendedDataRecords() function of Dem with the EventId provided in Dlt_DemTriggerOnEventStatus().⌋ (BSW35000007)

[Dlt479] ⌈The EventFreezeFrameData entry from **[Dlt476]** shall be filled by calling the Dem_DltGetMostRecentFreezeFrameRecordData() function of Dem with the EventId provided in Dlt_DemTriggerOnEventStatus().⌋ (BSW35000007)

NOTE: The data in the ExtendedDataRecord and the FreezeFrame are not interpreted by the Dlt module. They are send as raw data and the interpretation should be done at the external client. There some description files like specified in the ODX standard [iii] could be used.

7.3.3.3.2 Log Messages from Det

SW-Cs and BSW modules report errors to the Det module [11]. Such errors shall be forwarded to Dlt as messages with a suitable content using the function Dlt_DetForwardErrorTrace ().
All parameters from the Det function Det_ReportError() shall be forwarded to Dlt function Dlt_DetForwardErrorTrace () by the Det fan-out capability.

[Dlt430] ⌈Dlt shall provide the Dlt_DetForwardErrorTrace () function for the fan-out capability of Det.⌋ (BSW35000006)

[Dlt431] ⌈In the Dlt_DetForwardErrorTrace () function a Dlt log-message shall be build and send by calling internally the Dlt_SendLogMessage() function.⌋ (BSW35000006)

[Dlt376] ⌈The ApplicationID, ContextID and MessageID of the send log message shall have the following values:

ApplicationID	=	“DET”
ContextID	=	“STD”
MessageID	=	0x00000002

⌋()

[Dlt480] ⌈The log message generated in the function Dlt_DetForwardErrorTrace shall have the following payload entries:

Number	Type	Name	Description
1	uinit16	ModuleId	see Det_ReportError() in [11]
2	uint8	InstanceId	
3	uint16	ApiId	
4	unit8	ErrorID	

Table 7-4 The payload attached the log message generated Dlt_DetForwardErrorTrace (See 7.7.5 Payload, 8.4.2.1 Dlt_SendLogMessage and 8.4.3.1 Dlt_DetForwardErrorTrace)

The meaning of this entries is equivalent to the arguments provided to the Det_ReportError() function specified in Det [11].⌋ ()

7.3.4 Recommendation for generation of Message IDs

The payload of a Non Verbose Message contains the Message ID. The Message ID shall be unique for a ECU. The problem is that Message IDs are provided by a SW-C (the user of Dlt) and at the point in time of the coding of the log and trace message call there is no instance to guarantee the uniqueness of the Message ID.

A possible solution is to map all log messages in a virtual memory segment and then use the memory address as Message ID. Another solution is to have an authoring tool that is responsible for the uniqueness of the Message IDs.
In addition, it could be possible to assign Message ID values in the post build process, so uniqueness for the ECU can be guaranteed
Important is that for every Message ID a description for the associated message is provided.

[Dlt031] ⌈Message IDs used for Dem (0x00000001) and Det (0x00000002) are reserved and not usable for SW-Cs.⌋ ()

7.4 Communication from Dlt with external client

Dlt provides two possible ways to permit an external client the receiving of log and trace message. The communication can be realized by standard diagnostic services, but this is very limited in bandwidth. The alternative is realizing communication over a board specific communication interface, which could be implemented as a Complex Device driver, or as another standard interface like CAN, Flexray or Ethernet. Dlt provides an internal interface to a Dlt communication module, which is not part of the specification of Dlt.

7.4.1 Communication over standard Dcm channel

One possible communication interface uses standard diagnostic communication over UDS. Dcm [6] provides the access to this service. Dlt shall be aware of using diagnostic interfaces of Dcm to send log and trace messages (see chapter 7.7) and to send and receive control messages (see chapter 7.7.7.1).

The diagnostic services ReadDataByIdentifier (SID 0x22) and WriteDataByIdentifier (SID 0x2E) shall be used to transport Dlt messages in both direction. (From Dlt to external client and from external client to Dlt). The Dlt messages is completely placed in the data section of these services. Dlt defines its own PDU within this transported data. The DIDs specified by UDS are only used for addressing the Dlt module.

NOTE: Mostly diagnostic service (UDS over the OBD car connector) are very limited in bandwidth, log and trace messages shall be used and transmitted very carefully. The log and trace levels shall be set very limited, to prevent loose of messages.
Dcm provides security mechanisms during production phase which shall be used by Dlt (see chapter 7.5). When an external diagnostic client is connected to the ECU over Dcm, the external client shall set up a “diagnostic session” and hold this active.

The DID (Diagnostic identifier) used within Dlt shall be configured in Dcm. Therefore, the normal configuration parameter of Dcm can be used. Then each ReadDataByIdentifier() and WriteDataByIdentifier () service call is forwarded from Dcm to Dlt. For this purpose, the configuration container “DcmDspDid” of the Dcm module shall be used. There the provided functions of Dlt and the corresponding DID shall be configured.

[Dlt339] ⌈An interface between Dlt and Dcm shall be implemented. This interface shall consist as the following routines described in chapter 8.4.4 provided by Dlt for calling from Dcm:

- Dlt_ReadData
- Dlt_ReadDataLength
- Dlt_WriteData
- Dlt_ConditionCheckRead
- Dlt_DcmActivateEvent

For sending Dlt control messages from external client to the Dlt modulfe, the external client shall use the WriteDataByIdentifier (SID 0x2E) functionality of UDS.⌋ (BSW35000001, BSW35000035,)

[Dlt435] ⌈The Dlt_WriteData function provided by Dlt shall be called by Dcm if the WriteDataByIdentifier () service of UDS is requested. The argument “data” contains a complete Dlt control message. This message shall be interpreted by Dlt.⌋ (BSW35000035)

7.4.1.1 Using ResponseOnEvent with Dcm

Dlt shall use the ResponseOnEvent (ROE (0x86)) functionality provided by UDS and supported from Dcm for sending log and trace messages.
For this reason the Dcm [6] shall be configured to alow ROE functionality with the ReadDataByIdentifier (SID 0x22) with the Dlt module.
The secence for the ROE is shown in chapter 9.3

[Dlt469] ⌈If an external client enables the ROE for the ReadDataByID (0x22) for the Dlt module, the Dcm module calles the Dlt_DcmActivateEvent.⌋ ()

[Dlt037] ⌈The Dcm_TriggerOnEvent(eventID) diagnostic service shall be used, so that Dlt can send a message on request, each time there is a new log and trace message in its send buffer.⌋ (BSW35000035)

NOTE: Only if the ROE is enabled Dlt is allowed to use the Dcm_TriggerOnEvent() function.

[Dlt340] ⌈Dlt triggers the event by calling the function Dcm_TriggerOnEvent(eventID) of Dcm. The eventID used in this function shall be equal to the eventID provided by the the function call of Dlt_DcmActivateEvent.⌋ (BSW35000035)

[Dlt434] ⌈The Dlt_ReadData function provided by Dlt shall be called by Dcm if the ReadDataByIdentifier() service of UDS is requested. The argument “data” shall contain a complete Dlt message, which Dlt wants to send.⌋ (BSW35000035)

[Dlt039] ⌈The messages as described in the Dlt protocol specification (see chapter 7.7) shall be transported over UDS without any change or additional header.

UDS can transport up to 4095 Bytes in one packet. The lower layers of the diagnostic stack are responsible for necessary segmentation and reassembly.⌋ (BSW35000002, BSW35000035)

7.4.2 Communication over Dlt Communication Module

The alternative communication interface for high bandwidth is the Dlt communication module. Dlt defines an internal interface to a Dlt communication module.

[Dlt040] ⌈The Dlt communication module shall implement an interface to a CDD or handle the communication over the PduRouter.[2]

Dlt specifies a packet format for transmitting log and trace messages out of a ECU in the chapter protocol specification (see 7.7). This format shall be understood as a high-level protocol. It dose not care about the used transport medium and its characteristic. It is up to the system designer to choose or define a proper transport channel.

Possible channels are standard CAN and FlexRay Frames, a Serial Line, a XCP transmission or an IP connection. Dlt specifies the interface to a Dlt communication module, which is responsible for encapsulating the Dlt messages in a communication channel, sending and receiving them to and from a communication interface.
For example, the Dlt Communication Module can add in front of each packet a pattern like “DLT”+0x01 for identifying a send packet on a serial communication line.
⌋ (BSW35000001, BSW35000034)

[Dlt042] ⌈The Dlt Communication Module is responsible for segmentation and reassembly of the messages.⌋ (BSW35000034)

[Dlt043] ⌈One call of the API of the Dlt communication module for transmitting a log and trace message, encapsulates every time a complete log and trace message.⌋ (BSW35000002, BSW35000034)

7.5 Security

Dlt is used for testing and diagnostic purposes.

[Dlt044] ⌈During development phase the log and trace communication interfaces may be usable without any security mechanisms.⌋ (BSW35000029)

[Dlt465] ⌈To be able to use Dlt also during production phase, security mechanisms shall be implemented. Instead of implementing new security mechanisms, the security mechanisms of Dcm [6] shall be used.
Standard diagnostic channels over Dcm already implements diagnostic sessions and corresponding security levels.
Transmitting log and trace messages shall only be possible during a running diagnostic session.
The required diagnostic security level is configured in Dcm.⌋ (BSW35000042)

7.5.1 Securing communication over Dcm

Dcm [6] configures, in which session which diagnostic service can be used. When the diagnostic messages has passed Dcm, the messages are forwarded to Dlt.

[Dlt290] ⌈Log and trace messages and the Dlt control messages shall only be handled during a running diagnostic session except the default session.
As a consequence a diagnostic tester or a diagnostic master must be connected to the ECU, running a non-default session all the time.⌋ (BSW35000029)

[Dlt046] ⌈The diagnostic services ResponseOnEvent (0x86), ReadDataByIdentifier (0x22) and WriteDataByIdentifier (0x2E) shall be configured to be enabled in a specific diagnostic session.

A corresponding security level is activated from the diagnostic tester. The security level for call of ReadDataByIdentifier (0x22) and WriteDataByIdentifier (0x2E) for the corresponding DID shall be configured in Dcm.⌋ (BSW35000029)

7.5.2 Security for communication over Dlt communication module

The communication over the Dcm diagnostic session has a very good security procedure. Unlike the Dlt communication module sends directly over a given interface and do not care about any security. Therefore, it is very important to **enable** this interface only in a secured connection.

[Dlt048] ⌈The communication over the Dlt communication module shall be disabled per default.⌋ (BSW35000029)

[Dlt049] ⌈The enabling of the Dlt communication module shall only be possible by sending a control message in a secured diagnostic session as described in chapter 7.5.1.⌋ ()

[Dlt050] ⌈At development phase the Dlt communication module may be enabled per default.⌋ ()

[Dlt051] ⌈If the communication over the Dlt communication module is enabled there is no restriction to this interface for sending Dlt messages but also for receiving Dlt control messages.⌋ ()

7.6 Runtime management and Implementation

7.6.1 Buffering Messages

[Dlt052] ⌈Dlt shall temporarily store a maximum number of log and trace messages in a local buffer, if no connection to a external client is established.⌋ (BSW35000037)

[Dlt341] ⌈This buffer shall store incoming messages from SW-C and BSW modules for transmitting to the Dcm or the Dlt communication module.⌋ (BSW35000037)

[Dlt342] ⌈The size of this buffer is configured by the configuration parameter DltMessageBufferSize.⌋ (BSW35000037)

[Dlt053] ⌈If the buffer is full the oldest messages in the buffer shall be overwritten to store new incoming messages from SW-Cs or BSW modules.

For this behavior, a ring-buffer is recommended. The oldest messages in this case are lost.⌋ ()

[Dlt297] ⌈If message loose happens the Dlt control message MessageBufferOverflow shall be send. Additionally an internal flag shall be set for remembering this messages loose.⌋ ()

7.6.2 Bandwidth management

[Dlt054] ⌈Dlt shall implement a traffic shaping for its communication interfaces (over Dcm interface [6] and over Dlt communication module).⌋ (BSW35000030)

[Dlt055] ⌈The configured parameter DltBandwidthForDiagChannel and DltBandwidthForComModule are to use for limiting the bandwidth of the according channels.⌋ (BSW35000030)

[Dlt056] ⌈Traffic shaping shall be implemented as an integral addition of transmitted bits in relation to the passed time. The configuration parameter DltTimePeriodTrafficShaping specifies the time for adding traffic from the past (Time window for integral).⌋ (BSW35000030)

NOTE: For traffic shaping a sliding time window should be used. This means that a time window for calculating the transmitted data in the past shall be taken. For example this can be done by adding all transmitted data within the last 10 seconds (time window) to calculate the total transmitted data volume (e.g 10 kbit) within the time window. Then this volume shall be divided through 10 seconds to get the used bandwidth (in this case 1 kbit per second). This time window is sliding, this means that every time the used bandwidth is checked the traffic of the last 10 seconds (the time window) should be analyzed.

[Dlt344] ⌈If the bandwidth with in this window is too high Dlt shall add additional delays before it can send new messages over its interfaces.⌋ (BSW35000030)

7.6.3 Interfaces and behavior of Dlt communication module

[Dlt461] ⌈The Dlt communication module shall have the interfaces specified by chapter 8.6.2. ⌋ (BSW35000001, BSW35000034)

[Dlt462] ⌈The Dlt core module shall provide the interfaces specified in chapter 8.4.5⌋ (BSW35000034)

[Dlt463] ⌈The concert realization of the Dlt communication module is implementation specific, but it shall meet the specified behavior of its interfaces. ⌋ (BSW35000034)

7.6.4 Administration of pairs of Application ID and Context ID, log levels and trace status

Each SW-C/runnable shall register its used Application IDs and Context IDs.

[Dlt057] ⌈Dlt shall be aware of the registered Application- and Context IDs and store it internally as long as the ECU is running.

At runtime the log levels of different Application IDs and Context IDs can be changed by an external client. Dlt shall manage this runtime configuration.⌋ ()

7.6.4.1 Port Defined Argument Values and LogTraceSessionControl port interface

For every function call of Dlt_SendLogMessage, Dlt_SendTraceMessage and Dlt_RegisterContext a Port Defined Argument Value is associated with the corresponding Port. This Port Defined Argument Value is called within the Dlt "Session ID". It defines a connection of a specific log or trace endpoint like a port interface of a runable (service need).

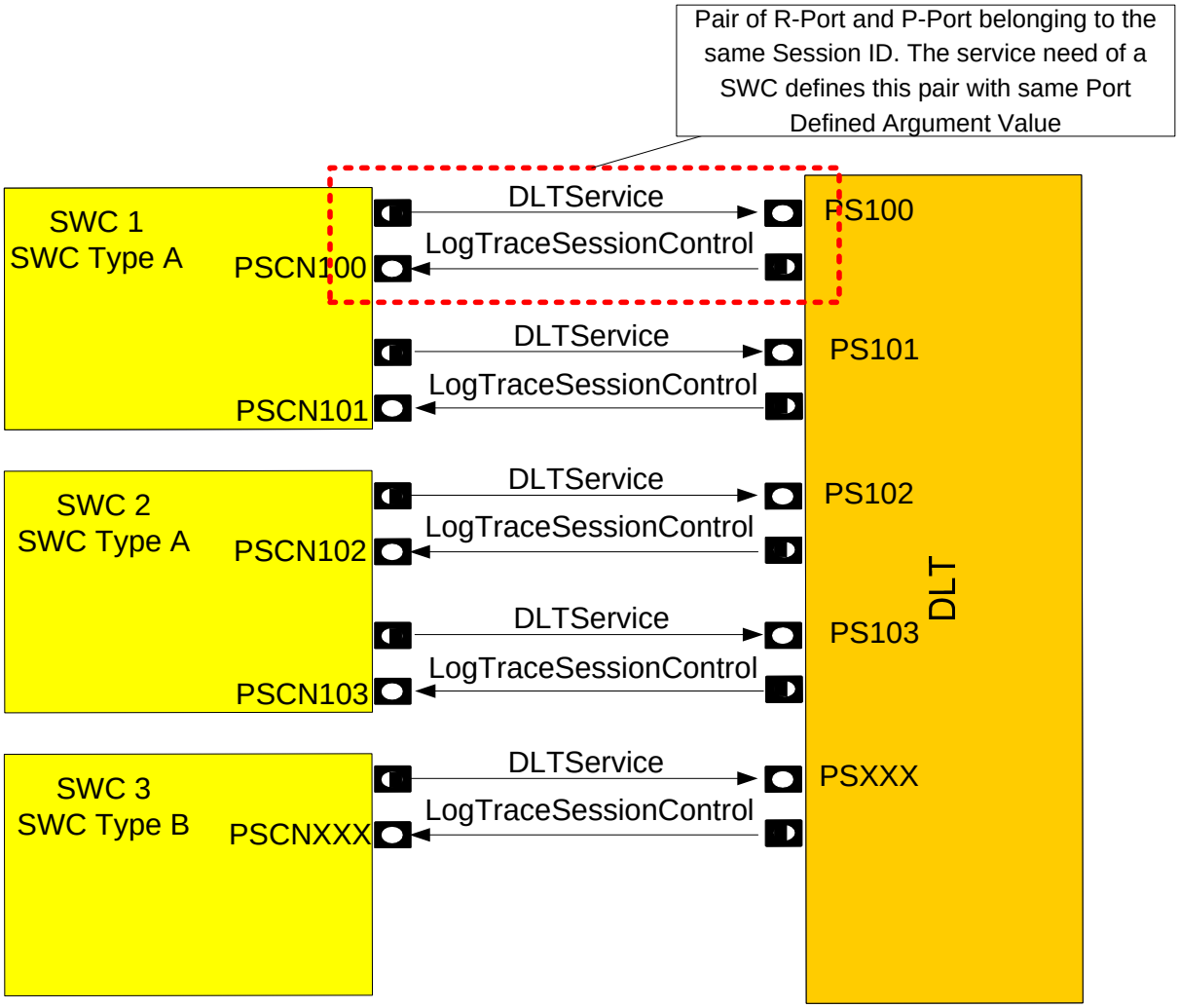

Figure 16 Logical view of R-Port and P-Port connections between SW-Cs and Dlt. SW-C uses the P-Port DLTService of Dlt for sending log or trace messages. Dlt tells the SW-Cs changes about the log level over the P-Port LogTraceSessionControl of the SW-C. DLTService Interface provides a port defined argument value to identify the sender of messages.

The communication between SW-Cs is in some kinds different in modeling and implementing as the communication between SW-Cs and BSW modules. Because of that, when a client server interface between the SW-C and a BSW module is used, some differences are to manage.

If the Dlt provides a port, it is the very same procedure like between SW-Cs. The SW-C calls the provide function from the RTE. The RTE translates the call and forwards it to the P-Port (the Dlt module). Because Dlt provides only one C-function the RTE adds the port defined argument value. Than Dlt can distinguish between the different sources (R-Ports of the SW-Cs).

In the other direction (if Dlt wants to call a P-Port of a SW-C) it is a little bit more complicated. Because of the RTE dose not multiplex the connection (as it did de-multiplex by calling from different SW-Cs) Dlt has to do the multiplexing functionality (see Figure 17). For every P-port of a SW-C, Dlt wants to notify, Dlt hast to call a separate function provided by the RTE.

At the time the Dlt module is to be build or generated it has to know all communication partners. This partners are the SW-Cs which define a R-port and a P-port interface for use with the Dlt. This ports are provided within the SW-C description. In this document the „ServiceNeeds“ holding the information which ports are required from Dlt or provided to Dlt. Also the „ServiceNeeds“ holds the information which pair of DLTService and LogTraceSessionControl ports belonging together. These ports shall have the same port defined argument value which is later on used by Dlt as Session ID.

If the Dlt module is up to generate, all SW-C descriptions of the ECUs SW-C shall be scanned for according ports and collect all „ServiceNeeds“. Than with this information a service component description for the Dlt module shall be generated. This can be done manually or by an automated process. The service component description for the Dlt is an equivalent to the SW-C description and used by the RTE to generate all needed functions.

In the „ServiceNeeds“ of the SW-Cs the pairs of DLTService and LogTraceSessionControl ports are given with their corresponding port defined argument value. This information shall be ported to the Dlt SW-C description. From this description the information about the Session IDs and the corresponding functions in the RTE can be extracted (see Figure 16).

[Dlt058] ⌈The Port defined Argument Values shall be used for identifying a session used on an ECU.⌋ (BSW35000038)

[Info]:
The port defined argument value corresponds to the defined Session ID (in this document). The value shall start at 0x1000 (for BSW modules the module ID is taken, starts at 0x0). For connecting a Dlt Service Port to a SW-C the port defined argument value is incremented every time. Therefore, the value is of 0x1000 + n, where n is a continuous number.

[Dlt059] ⌈Every SW-C/runnable which wants to use the Dlt Service shall provide a LogTraceSessionControl client server interface.

This interface is for telling the runnable the new log levels or trace status by Dlt.⌋ (BSW35000033, BSW35000038)

[Dlt289] ⌈Dlt shall generate for every service need from a SW-C the function calls for all corresponding LogTraceSessionControl interfaces on the RTE (compare Figure 17). ⌋ (BSW35000005)

[Dlt060] ⌈Dlt shall handle a table which holds the SessionIDs and the pointers to the interface functions.

SessionID (Port Defined Argument Value)	Pointer to interface function for **LogTraceSessionControl** interface
0x1001	Rte_Call_PSC001_Dlt_SetLogLevel
	Rte_Call_ PSC001Dlt_SetTraceStatus
0x1002	Rte_Call_ PSC002_Dlt_SetLogLevel
	Rte_Call_ PSC002_Dlt_SetTraceStatus
…	…

Table 7-5 Table which SessionIds and interface functions to hold by Dlt

⌋()

[Dlt345] ⌈The prototypes for the functions to be stored in the table above shall be taken from the Dlt SW-C description.⌋ (BSW35000005)

[Dlt426] ⌈The Session IDs and the connection to the corresponding functions shall be taken form the Dlt SW-C description. The Session ID corresponds to the port defined argument value given in the Dlt SW-C description.⌋ (BSW35000005)

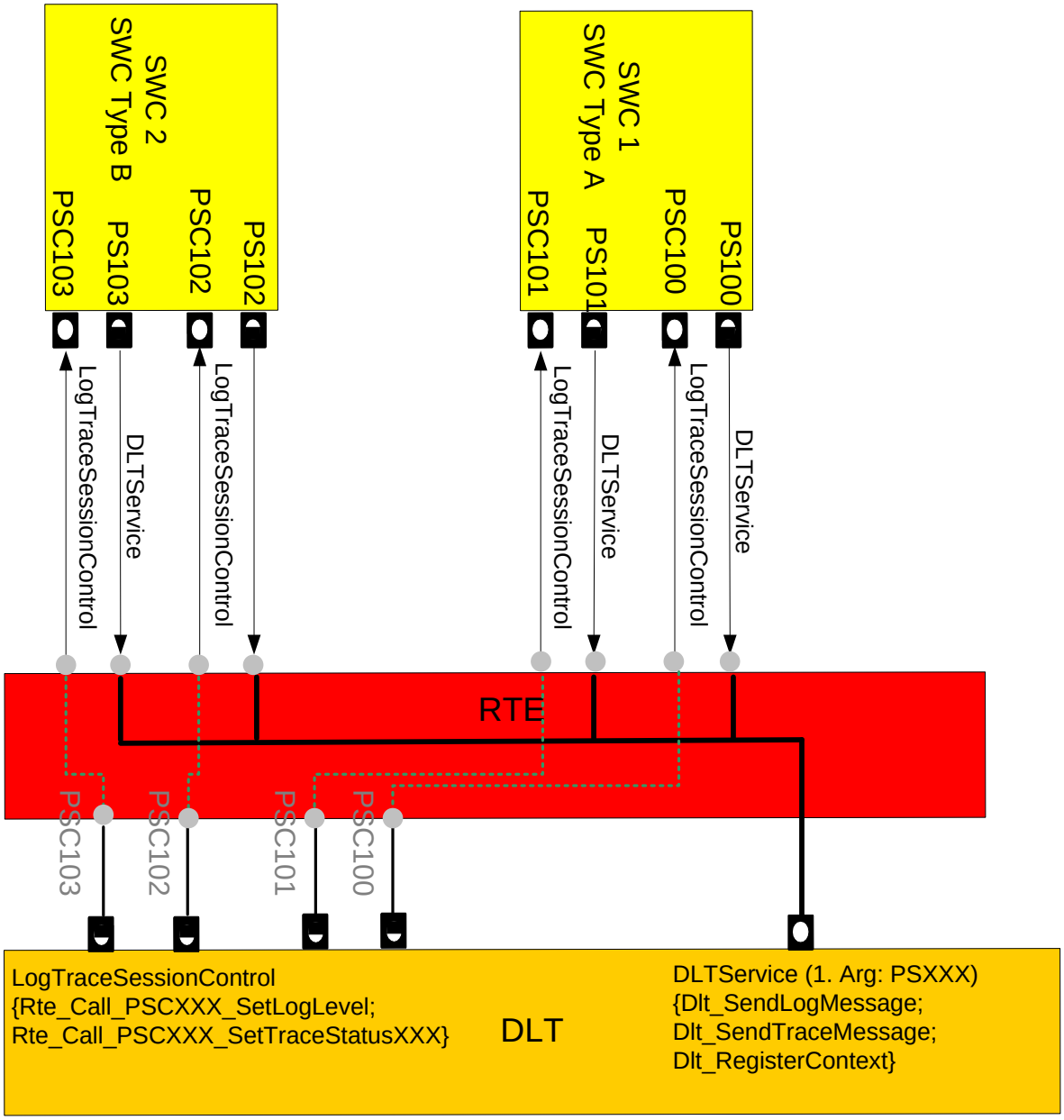

Figure 17 View of a programmer for communication between Dlt and SWS over the RTE. The port interface DLTService is forwarded by the RTE from SW-C to Dlt (by adding a port defined argument value). If Dlt wants to call the LogTraceSessionControl port of a SW-C it shall call a function provided by the RTE (Rte_Call_XXX), then RTE forwards the call to the SW-C P-Port.

7.6.4.2 Configuration and usage of Dlt ServiceNeeds

The “SoftwareComponentTemplate” [8] specifies for the communication between SW-Cs and BSW modules so called “ServiceNeeds”. An instance of the class “ServiceNeeds” is referenced by the “SwcServiceDependency”. The SoftwareComponentTemplate specifies a meta class called “DltUserNeeds”. For the use of a specific port interface with Dlt by a SW-C for each used SessionID a new instance of “SwcServiceDependency” shall be referenced by the “SwcInternalBehavior” instance of the SW-C. This attached

“SwcServiceDependency” shall reference a “ServiceNeeds” class which shall be derived from the class “DltUserNeeds”.

[Requirement for SW-C configuration]
The SW-C description shall be build as follows:
For each group of ports which belong to one SessionID and shall be handled with one PortDefinedArgumentValue by the Dlt service:

- For each used SessionID create one "SwcServiceDependency" as part of the "SwcInternalBehavior"
- Add the "DltUserNeeds" to this "SwcServiceDependency"
- For each included Port add one "RoleBasedPortAssignment" with a reference to the "PortPrototype"
- The role of "RoleBasedPortAssignment" can be left empty
- Create a new “PortAPIOption” with the value of the SessionID as “PortDefinedArgumentValue”
- Attach to "RoleBasedPortAssignment" all “PortPrototype” elements which shall belong to this SessionID

[workflow for Dlt generation tool]
At the generation phase the generation tool of Dlt shall scan the SW-C-description files of the SW-Cs. There it shall perform the following steps to generate the dependencies of SessionID and assinged port interfaces.

- Go thru all “SwcInternalBehavior” instances of a SW-C and search the “SwcServiceDependency” classes which contain a “DltUserNeeds”
- Go thru all attached “RoleBasedPortAssignments” and create a list of all attached “PortPrototype” elements.
- Find for all found PPorts in the “PortPrototype” the “PortDefinedArgumentValue”. This can be done by searching the “PortAPIOption” elements which belong to the “InternalBehavior”
- Fill the tables described in 7.6.4.3 with the references to the PPorts of the SW-Cs and the belonging SessionIDs
- Generate the SW-C-description file for the Dlt module which contain the RPort matching the PPorts found at the SW-Cs.

[Dlt471] ⌈At generation phase the Dlt generation tool shall scan the SW-C description files from the SW-Cs running on the local ECU (see ECU Configuration Specification [4]).⌋ ()

[Dlt472] ⌈With the information from the SW-C description files of the SW-Cs Dlt shall generate its own SW-C-description file for specifying the provided port interfaces.⌋ ()

7.6.4.3 Recommended tables in Dlt to hold information about Application and Context IDs

Figure 1 shows a solution with four tables. This is for a large number of Application and Context IDs. Here a hierarchical search can be done. The size (number of lines) of table (i) corresponds to DltMaxCountAppIds. The number of rows of table (ii) corresponds to DltMaxCountContextIdsPerAppId. The number of lines of table (iii)

corresponds to DltMaxCountContextIds. Table (iv) is generated form the „ServiceNeeds“ of all connected SW-Cs/runnables and the corresponding Port Defined Argument Value.

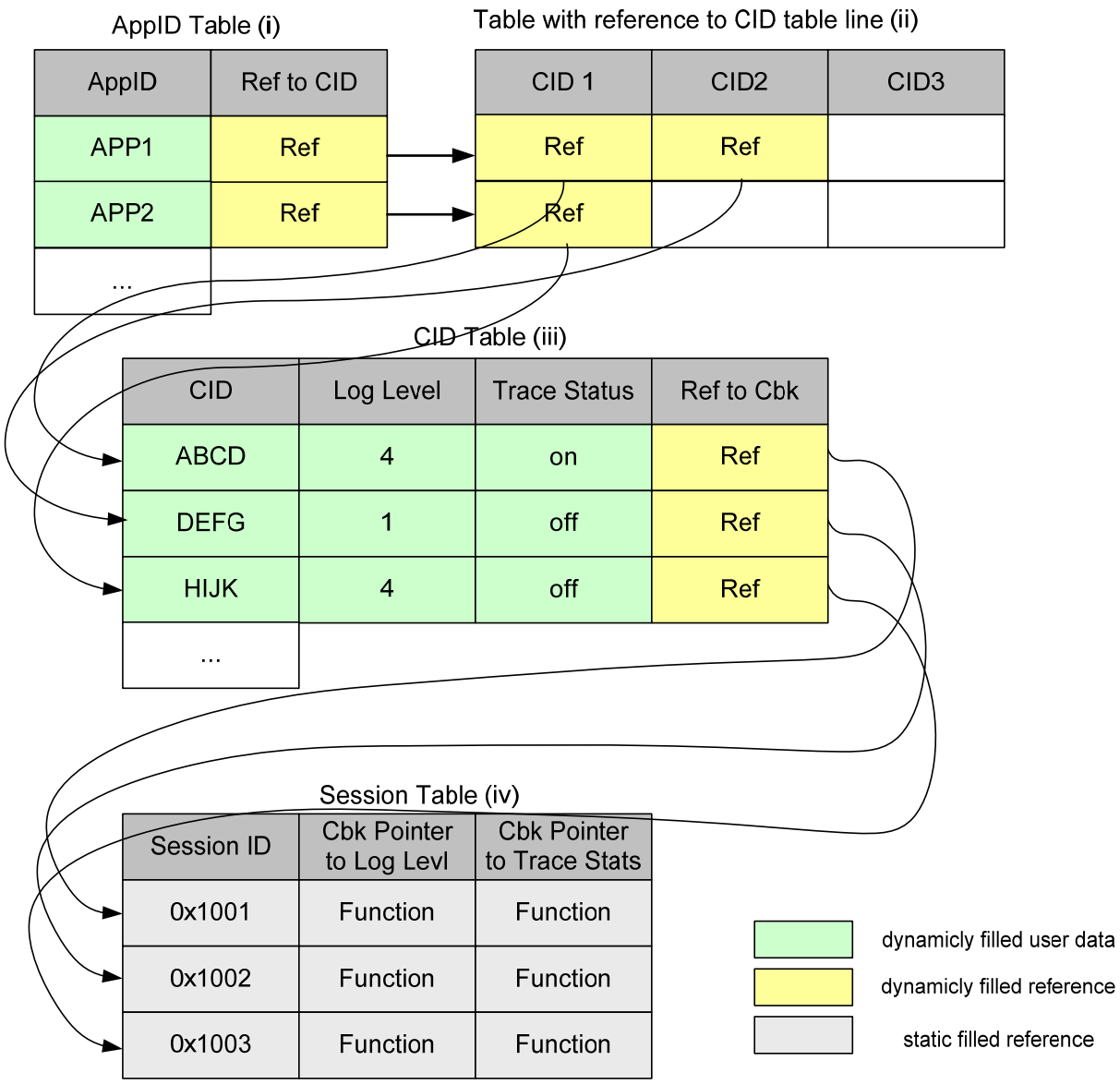

Figure 18 For large numbers of pairs of Application IDs and Context IDs several tables can be used for holding the information. For a faster search table (i) holds the Application IDs and references to an array (ii) which holds references to the Context IDs with additional information. So a two step search can be done. (CID == Context ID; AppID == Application ID)

Figure 2 shows a solution with two tables. This is for a smal number of Application and Context IDs. Here a linear search must be done. The size (number of lines) of table (i) corresponds to DltMaxCountAppIds. The number of rows of table (ii) corresponds to DltMaxCountContextIds. Table (ii) is generated form the „ServiceNeeds“ of all connected SW-Cs/runnables and the corresponding Port Defined Argument Value.

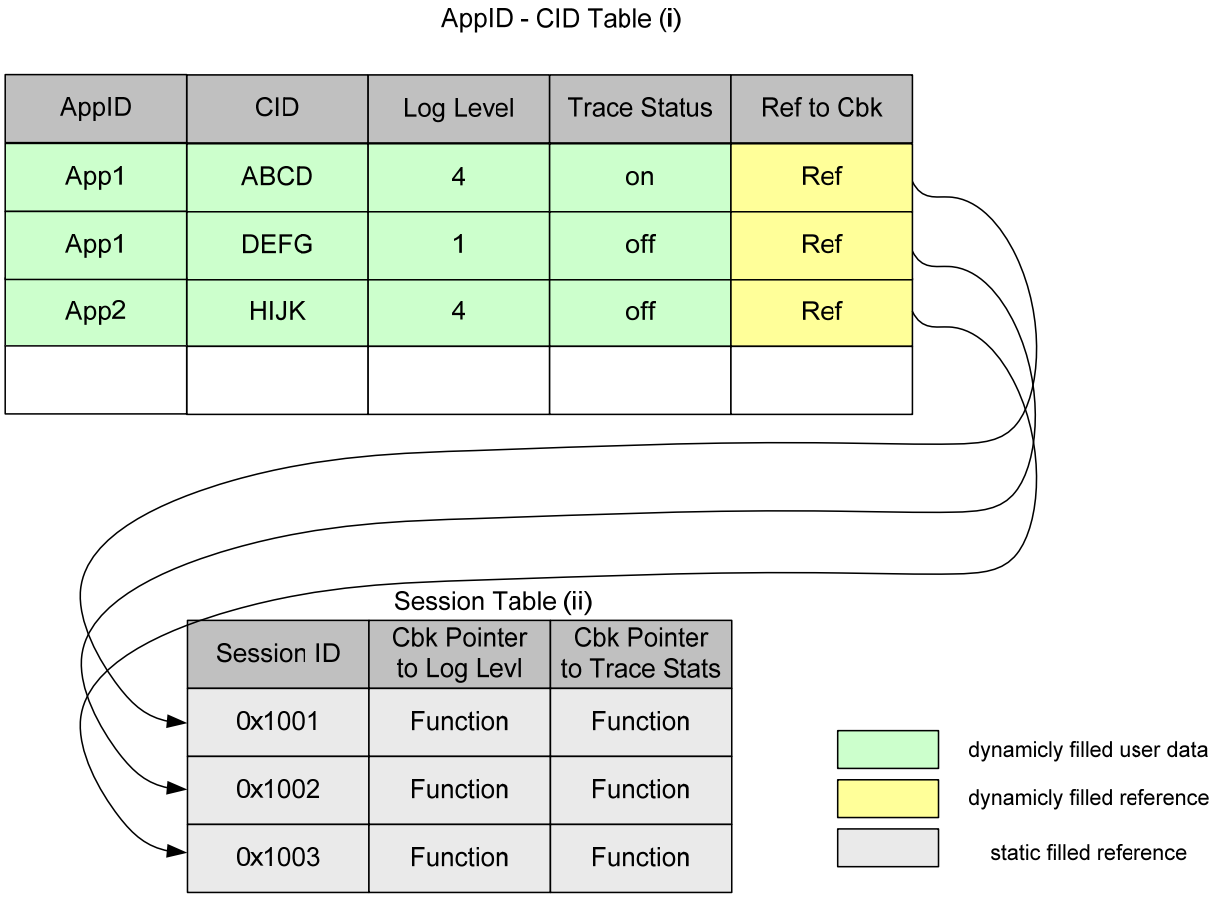

Figure 19 Alternatively a more simple can be used where only one table holds information of Application ID and Context ID. But here a linear search for all pairs is needed. (CID == Context ID; AppID == Application ID)

[Dlt061] ⌈The contents of the described tables (except the Session Table) shall be the contents to store in the NVRAM, if a persistent storage of the configuration of log levels and trace status is requested.

The implementation and representation of the tables can be done in a different way than the described tables here, but the function shall be the same.⌋ ()

[Dlt064] ⌈If DltImplementAppIdContextIdQuery is true additionally to each Application ID and Context ID a description string shall be storable.⌋ (BSW35000033)

7.6.5 Message Filtering

Dlt shall check if the log level of the incoming log message is the same or below as the maximum log level stored for this Context ID - Application ID pair (the log level of the incoming message shall be in the pass through range).
If the check is not successful, the messages shall be discarded, otherwise the message shall be transmitted to the external client.

[Dlt065] ⌈If DltImplementFilterMessages is enabled and DltUseFilterMessages is set, Dlt shall filter all incoming log and trace messages.⌋ (BSW35000040)

[Dlt066] ⌈If DltImplementFilterMessages is not enabled all functionality for filtering messages in Dlt from SW-Cs and BSW modules shall be left.⌋ ()

[Dlt067] ⌈If no explicit log level or trace status is set the vale of DltDefaultMaxLogLevel shall be used instead.⌋ (BSW35000040)

[Dlt068] ⌈Also for every Context ID / Application ID pair the status of the trace status shall be stored in Dlt.⌋ (BSW35000031, BSW35000040)

[Dlt347] ⌈If the trace status for a pair is disabled, the incoming trace messages shall be discarded, even if a connection to an external client is available.⌋ (BSW35000040)

7.6.5.1 Administration of log level for filtering

[Dlt069] ⌈If the maximum log level for a Application ID and Context ID is changed by an external client at runtime, Dlt shall store this changes in the corresponding tables. ⌋ (BSW35000031)

NOTE: These tables are in RAM, that means that storing in the table is not persistent after next startup. Additionally SW-Cs shall be informed of the log level change (see 7.3.3.1.4).

[Dlt070] ⌈At startup the parts of the table which are changeable at runtime shall be restored from stored data in NVRAM.⌋ ()

7.6.5.2 Administration of trace state for filtering

[Dlt071] ⌈If the trace status for a Application ID and Context ID is changed by an external client at runtime, Dlt shall store this changes in the corresponding tables.⌋ (BSW35000031, BSW35000040)

NOTE: These tables are in RAM that means that storing in the table is not persistent after next startup. Additionally SW-Cs shall be informed of the trace status change (see 7.3.3.1.4).

[Dlt072] ⌈At startup the parts of the table which are changeable at runtime shall be restored from stored data in NVRAM.⌋ ()

7.6.6 Storing Configuration in NVRAM

[Dlt287] ⌈If the configuration parameter DltImplementNVRamStorage is set, Dlt shall implement the possibility to store some initial values of runtime variables persistent. The Block ID in the NVRam module [12] shall be DltNvramBlockId.⌋ (BSW35000039)

[Dlt073] ⌈If DltImplementNVRamStorage is enabled the log levels and trace status, which are explicitly set for a pair of Application ID and Context ID by an External Client at runtime, shall be storable persistent.⌋ (BSW35000039)

[Dlt074] ⌈If DltImplementNVRamStorage is enabled the information about enabling or disabling any interfaces of the Dlt communication module shall be stored persistent.⌋ (BSW35000039)

[Dlt076] ⌈If DltImplementNVRamStorage is enabled the bandwidth adjustments shall be storable persistent.⌋ (BSW35000039)

[Dlt077] ⌈Dlt shall have a runtime variable for the following configuration parameters:

- DltHeaderUseEcuId
- DltHeaderUseTimestamp
- DltFilterMessages
- DltDefaultMaxLogLevel
- DltHeaderUseTimestamp
- DltHeaderUseEcuId
- DltHeaderUseExtendedHeader
- DltHeaderUseSessionId
- DltHeaderUseVerboseMode
- DltBandwidthForDiagChannel
- DltBandwidthForComModule
- DltVfbTraceLogLevel
- DltDefaultTraceStatus

to allow a reconfiguration at runtime.⌋ (BSW35000031, BSW35000039)

NOTE: The runtime variables required by Dlt077 shall be used in the implementation instead of directly accessing the configuration parameters.

[Dlt451] ⌈If DltImplementNVRamStorage is enabled, non-volatile memory blocks (configurable in size by the NVRAM module) shall be used by the Dlt module to achieve permanent storage of variables values required in Dlt077.⌋ ()

[Dlt449] ⌈If DltImplementNVRamStorage is enabled, the Dlt module has to verify the validity of its non volatile blocks.⌋ ()

[Dlt350] ⌈If DltImplementNVRamStorage is enabled the value of the configuration parameter from Dlt077 are to understand as the initial value for the data in the NVRAM.⌋ ()

NOTE: Initial values in this case are the initial values for the persistent stored values for the first startup of the ECU.

[Dlt078] ⌈The storing of information to NVRAM memory RAM blocks shall only be done when the external client requests the storing persistently of this data and if DltImplementNVRamStorage is enabled.⌋ ()

[Dlt452] ⌈If DltImplementNVRamStorage is enabled the Dlt module shall use the API NvM_WriteBlock of the NVRAM module for persistent storing.

If this explicit store request is not done, Dlt restores the untouched NVRAM data at next ECU startup in the Dlt_Init function.⌋ (BSW35000039)

[Dlt453] ⌈If DltImplementNVRamStorage is enabled the Dlt module shall use the API NvM_ReadBlock of the NVRAM module for restoring the values from persistent storage for the variables required by Dlt077.⌋ (BSW35000039)

[Dlt491] ⌈The restoring of the parameters mentioned in **[Dlt453]** shall be done in the Dlt_Init() function.⌋ ()

[Dlt450] ⌈After the API Dlt_Init the Dlt shall be fully operational.⌋ ()

[Dlt288] ⌈If DltImplementNVRamStorage is not set, persistent storage shall not be used.

Runtime variables shall be used to allow reconfiguration at runtime. The different is that this configuration is not persistent stored into NVRAM and the defaults are restored at ECU startup.

If requested, a factory default of log level and trace status of all Context IDs and Application IDs shall be set.⌋ (BSW35000039)

[Dlt348] ⌈Reset to factory default shall be done by deleting the individual settings for Application IDs and Context IDs and setting the maximum default log level to DltFactoryDefaultMaxLogLevel. Also the reset to factory default shall set the initial values for the variables required in Dlt077 to the values of the corresponding configuration parameters.⌋ ()

7.6.7 Processing of control messages

Dlt uses control messages for reconfiguration at runtime (see chapter 7.7.6.1). Control messages are mostly send by an external client and interpreted by Dlt. Afterwards Dlt sends control messages as answer back to the external client.

[Dlt079] ⌈Dlt shall process control messages. It shall receive these messages, process it (by doing an accurate action) and response to the request.

The response is also a normal Dlt message, which is to place in the send-buffer.⌋ (BSW35000031)

[Dlt351] ⌈The size of the generated control messages to send shall not exceed DltMaxMessageLength.⌋ ()

7.6.8 Message Handling

If Dlt receives a message from SW-Cs or BSW modules by a call to Dlt_SendLogMessage or Dlt_SendTraceMessage the following procedure shall be performed.

[Dlt080] ⌈Dlt shall copy the provided payload to the send buffer of Dlt. In most cases the payload provided by a SW-C or BSW module is attached to a message without modification. (exception see 7.6.8.3)⌋ ()

[Dlt298] ⌈Dlt shall add the message header (see 7.7) for transmitting the message over the network. The content of the header depends on the provided information by the call of Dlt_SendLogMessage and Dlt_SendTraceMessage and on some configuration parameters.⌋ ()

[Dlt081] ⌈If the message length exceeds DltMaxMessageLength the message shall be discarded and the call of Dlt_SendLogMessage and Dlt_SendTraceMessage shall return with NOT_OK.⌋ ()

7.6.8.1 Filling the Header

As described in 7.7 Dlt uses a protocol for transmitting messages. If a log or trace message is received by Dlt some entries of this protocol shall be filled.

[Dlt082] ⌈Table 7-6 shows the connection between the configuration parameters and equivalent bit entries in the field header type (HTYP), which Dlt shall implement.

Protocol parameter	Configuration parameter
Use Extended Header (UEH)	DltHeaderUseExtendedHeader
MSB First (MSBF)	DltHeaderPayloadEndianes

With ECU ID (WEID)	DltHeaderUseEcuId
With Session ID (WSID)	DltHeaderUseSessionID
With Timestamp (WTMS)	DltHeaderUseTimestamp
Version Number (VERS)	Version number of Dlt protocol used by this Dlt implementation
ECUID (ECU)	DltEcuId

Table 7-6 Header Type (HTYP) bit entries in dependency on configuration parameters.

⌋()

[Dlt083] ⌈The related entries in the header TMSP and ECU shall be done in dependency to the bits set in the HTYP.
The timestamp shall be generated at the moment the Dlt_SendXXXMessage was called. It shall be the local time from the ECU (uptime). One hardware free running timer (HWFRT) of the AUTOSAR GPT module can be used to get a timestamp.⌋()

[Dlt084] ⌈The field Message Counter (MCNT) shall be incremented for every message which is put to the send buffer (see 7.6.1).⌋(BSW35000018)

[Dlt085] ⌈The field Length (LEN) shall contain the overall length of the send message in byte.
The filed Session ID (SEID) shall be filled with the Session ID (Port Defined Argument Value) provided by the call off Dlt_SendLogMessage and Dlt_SendTraceMessage.⌋()

7.6.8.2 Filling the extended Header

[Dlt086] ⌈The extended Header shall only be attached when the UEH flag is set. The information for the extended header shall be taken from the log_info/trace_info parameter from the function Dlt_SendLogMessage/Dlt_SendTraceMessage.⌋(BSW35000019)

[Dlt087] ⌈The functionality for filling the extended header can be left if DltImplementExtendedHeader is not set.⌋()

[Dlt088] ⌈

Protocol parameter	Description of source

Verbose (VERB)	log_info.options.verbose_mode
Message Type (MSTP)	DLT_TYPE_LOG if call to Dlt_SendLogMessage DLT_TYPE_APP_TRACE if call to Dlt_SendTraceMessage DLT_TYPE_NW_Trace if call from RTE trace
Number of arguments (NOAR)	log_info.options.arg_count
Application ID (APID)	log_info.app_id
Context ID (CTID)	log_info.context_id

Table 7-7 Fields of the extended Header and how to fill them

⌋(BSW35000019)

7.6.8.3 Switch between Verbose and Non Verbose Mode

[Dlt089] ⌈Normally the payload of a Dlt message is passed without modification. It is up to the SW-C to manage the payload in Verbose or Non Verbose Mode.⌋ ()

[Dlt090] ⌈If DltImplementVerboseMode is not true, a call to Dlt_SendLogMessage or Dlt_SendTraceMessage shall return NOT_OK to the caller of the function and reject the message if it sends a message in Verbose Mode (verbose mode flag set).⌋ ()

7.7 Protocol Specification (for transmitting to a external client and saving on the client)

Dlt translates and serializes the messages transferred from the user API into a byte stream.This protocol specification describes the format of this byte stream. The stream data can also be saved in a file in the external client.

The protocol supports a verbose and a non-verbose mode. In the verbose mode, the complete description of the transferred data is provided within the protocol. The result is a self-describing data format. In the non-verbose mode, only data of non-static information is transmitted (see 7.7.5.1) and the description is provided externally.

[Dlt300] ⌈Depending on the configuration parameter DltUseVerboseMode, the protocol shall support verbose or non-verbose mode.⌋ ()

7.7.1 Dlt Message Format in General

The byte stream consists of one or more Dlt messages that are ordered back-to-back, without any separation marks. One Dlt Message consists of a mandatory Standard Header, which contains essential information for processing the message,

of an optional Extended Header, which provides detailed information about the message and of optional payload.
Reducing the size of the Standard Header by skipping optional fields have advantages if bandwidth is very limited.

[Dlt301] ⌈The Dlt message shall consist at least of a Standard Header.⌋ (BSW35000002, BSW35000013)

[Dlt467] ⌈Following table (Table 7-8) shows a general assembly of one Dlt message. Every Dlt message shall consist of the shown entries.

Length (bytes)	Name	Description
4,8,12 or16	**Standard Header (Mandatory)**	Contains essential information for interpreting the Dlt message
10	**Extended Header (Optional)**	Can be added optionally for providing more information or for use in control messages
x	**Payload (Optional)**	Contains information about a specific log and trace message

Table 7-8 General Dlt message format

⌋ (BSW35000002)

7.7.2 Header Definition of the Dlt Protocol

[Dlt091] ⌈The Standard Header and the Extended Header shall be in big endian format (MSB first).⌋ ()

7.7.3 Standard Header

[Dlt302] ⌈The Standard Header shall be at the beginning of a Dlt Message.

The following table gives an overview of the composition of the Standard Header. Detailed description of the entries follows.⌋ (BSW35000002, BSW35000013)

[Dlt458] ⌈The Standard Header shall consist of the following entries:

Position in bytes	Number of bits	Name	Short Description
0	8	Header Type (HTYP)	

Position in bytes	Number of bits	Name	Short Description
	bit 0	Use Extended Header (UEH)	If set, the Extended Header is transmitted. If not set, the Extended Header is not transmitted and the message is in non-verbose mode.
	bit 1	MSB First (MSBF)	If set, the payload data is in big endian format, else in little endian format.
	bit 2	With ECU ID (WEID)	If set, the ECU ID (ECU) is attached in the Standard Header.
	bit 3	With Session ID (WSID)	If set the Session ID (SEID) is attached in the Standard Header.
	bit 4	With Timestamp (WTMS)	If set, the timestamp (TMSP) is attached in the Standard Header.
	bit 5-7	Version Number (VERS)	Version number of Dlt Data protocol
1	8	Message Counter (MCNT)	Continuous number of message, for detection of lost messages. Counter is increased for every received message by the Dlt API message in local buffer.
2-3	16	Length (LEN)	Length of the complete message in bytes
Optional if WEID is set			
4-7	32	ECU ID (ECU)	Unique address of sender (Diag-Addr / ECU Name / ...), interpreted as 4 ASCII characters
Optional if WSID is set			
8-11	32	Session ID (SEID)	Session number
Optional if WTMS is set			
12-15	32	Timestamp (TMSP)	Continuous time / ticks from the ECU at the moment the message is sent to Dlt.

Table 7-9 Overview of the Standard Header

⌋ (BSW35000016, BSW35000017, BSW35000018, BSW35000022)

7.7.3.1 Header Type (HTYP)

[Dlt094] ⌈The Header Type shall be interpreted as an 8-bit field. The included bits are UEH, MSBF, WEID, WSID, WTMS, VERS (3 bit), as shown in following table:

	Bit Position							
Offset	**0**	**1**	**2**	**3**	**4**	**5**	**6**	**7**
0	UEH	MSBF	WEID	WSID	WTMS	VERS	VERS	VERS

Table 7-10 Assembly of the Header Type in Standard Header

⌋()

7.7.3.1.1 Use Extended Header (UEH)

[Dlt406] ⌈The Use Extended Header (UEH) bit is set depending on the configuration parameter DltHeaderUseExtendedHeader.
If it's set, Extended Header (see 7.7.4) adjoins the Standard Header else the Extended Header is skipped.⌋()

[Dlt095] ⌈If the UEH bit is set, the Extended Header shall be transmitted after the Standard Header.⌋()

[Dlt303] ⌈If the UEH bit is not set, the Extended Header shall not be transmitted after the Standard Header.⌋(BSW35000044)

[Dlt096] ⌈If the UEH bit is not set, the payload shall be interpreted as in non-verbose mode.⌋(BSW35000024)

7.7.3.1.2 Most Significant Byte First (MSBF)

The MSBF bit specifies the byte order of the payload. It depends on the configuration parameter DltHeaderPayloadEndianes.

[Dlt097] ⌈If the MSBF bit is set, the most significant byte shall be first in payload (big endian format).⌋(BSW35000014, BSW35000016)

[Dlt304] ⌈If the MSBF bit is not set, least significant byte shall be first in payload (little endian format).⌋(BSW35000014, BSW35000016)

7.7.3.1.3 With ECU ID (WEID)

With this parameter the sender of a message can be identified unique. The WEID bit is set depending on the configuration parameter DltHeaderUseEcuId.

[Dlt098] ⌈If the WEID bit is set, the ECU ID (ECU) shall be transmitted.⌋ (BSW35000022)

[Dlt305] ⌈If the WEID bit is not set, ECU ID (ECU) field shall be skipped and is not located in the Standard Header.⌋ ()

7.7.3.1.4 With Session ID (WSID)

[Dlt407] ⌈The WSID bit is set depending on the configuration parameter DltHeaderUseSessionID.⌋ ()

[Dlt101] ⌈If the WSID bit is set, the Session ID shall be transmitted.⌋ (BSW35000020)

[Dlt306] ⌈If the WSID bit is not set, the Session ID field shall be skipped and is not located in the Standard Header.⌋ ()

7.7.3.1.5 With Timestamp (WTMS)

[Dlt408] ⌈The WTMS bit is set depending on the configuration parameter DltHeaderUseTimestamp.⌋ ()

[Dlt102] ⌈If the WTMS bit is set, the timestamp shall be transmitted.⌋ (BSW35000017)

[Dlt307] ⌈If the WTMS bit is not set, the timestamp (TMSP) field shall be skipped and is not located in the Standard Header.⌋ ()

7.7.3.1.6 Version Number (VERS)

The sender sets the Version Number of the Dlt Data Protocol in the Standard Header according to the used version. The receiver checks the Version Number and interprets the Dlt message according to the Version Number. Future versions of Dlt Data Protocol may exist.

[Dlt318] ⌈The Version Number of the Dlt Data Protocol consists of 3 bit.⌋ ()

[Dlt103] ⌈The Version Number shall always be set.⌋ ()

[Dlt104] ⌈The receiver of a Dlt message shall check the Version Number and shall only interpret the Dlt message if the Version Number is supported.⌋ ()

[Dlt299] ⌈The Version Number for this Dlt Data Protocol is 0x1.⌋ ()

7.7.3.2 Message Counter (MCNT)

The Message Counter counts Dlt messages received by the Dlt module. With the Message Counter, lost messages can be recognized to a certain level.

[Dlt319] ⌈The Message Counter is an unsigned 8-bit (0-255) integer.⌋ (BSW35000018)

[Dlt105] ⌈The Dlt module shall increment the Message Counter by one at every message received via the Dlt API.⌋ (BSW35000018)

[Dlt106] ⌈If Message Counter reaches 255, it starts by 0 at the next message.⌋ (BSW35000018)

7.7.3.3 Length (LEN)

Length (LEN) includes the Standard Header, the optional Extended Header and the optional payload.

[Dlt320] ⌈Length is a 16-bit unsigned integer.⌋ ()

[Dlt107] ⌈Length (LEN) shall hold the total length of the Dlt message in byte.⌋ ()

7.7.3.4 ECU ID (ECU)

The ECU ID identifies the ECU (see 7.1.5).

[Dlt321] ⌈ECU ID is a 32-bit field interpreted as four 8-bit ASCII characters.⌋ ()

[Dlt108] ⌈ECU ID shall be unique within the used domain.⌋ ()

[Dlt308] ⌈If the ECU ID is shorter than four 8-bit ASCII characters, the remaining characters shall be filled by 0x00.

For instance, it can be a diagnostic address or a name consisting of 4 ACSII characters like “ABS1”.⌋ ()

7.7.3.5 Session ID (SEID)

Session ID is the identification number of a log or trace session (see 7.1.6).

[Dlt322] ⌈Session ID is a 32-bit unsigned integer.⌋ (BSW35000020)

[Dlt110] ⌈Session ID shall be the Session ID of the port interface (see 7.3.3.1.7), which sends the message.⌋ (BSW35000020)

7.7.3.6 Timestamp (TMSP)

[Dlt323] ⌈Timestamp is a 32-bit unsigned integer.⌋ (BSW35000017)

[Dlt112] ⌈The TMSP bit field shall hold the timestamp from the moment SW-C sends the message to Dlt.⌋ (BSW35000017)

[Dlt309] ⌈The time resolution is in 0.1 milliseconds.⌋ ()

[Dlt113] ⌈Timestamp shall be the uptime of the ECU.⌋ ()

[Dlt481] ⌈One hardware free running timer (HWFRT) of the AUTOSAR GPT module shall be used to get a timestamp. The configuration parameter DltGptChannel devotes the channel to use within the GPT module.⌋ ()

7.7.3.7 Assembly of Standard Header

		Bit position							
Offset to Standard Header start pos in byte	**Field Name**	**0**	**1**	**2**	**3**	**4**	**5**	**6**	**7**
0	**HTYP**	UEH	MSBF	WEID	WSID	WTMS	VERS	VERS	VERS
1	**MCNT**	MCNT	MCNT	MCNT	MCNT	MCNT	MCNT	MCNT	MCNT
2	**LEN**	LEN	LEN	LEN	LEN	LEN	LEN	LEN	LEN
3		LEN	LEN	LEN	LEN	LEN	LEN	LEN	LEN
4	**ECU (optio-nal)**	ECU	ECU	ECU	ECU	ECU	ECU	ECU	ECU
5		ECU	ECU	ECU	ECU	ECU	ECU	ECU	ECU
6		ECU	ECU	ECU	ECU	ECU	ECU	ECU	ECU
7		ECU	ECU	ECU	ECU	ECU	ECU	ECU	ECU
8	**SEID**	SEID	SEID	SEID	SEID	SEID	SEID	SEID	SEID

		Bit position							
Offset to Standard Header start pos in byte	**Field Name**	**0**	**1**	**2**	**3**	**4**	**5**	**6**	**7**
9	**(optio-nal)**	SEID	SEID	SEID	SEID	SEID	SEID	SEID	SEID
10		SEID	SEID	SEID	SEID	SEID	SEID	SEID	SEID
11		SEID	SEID	SEID	SEID	SEID	SEID	SEID	SEID
12	**TMSP (optio-nal)**	TMSP	TMSP	TMSP	TMSP	TMSP	TMSP	TMSP	TMSP
13		TMSP	TMSP	TMSP	TMSP	TMSP	TMSP	TMSP	TMSP
14		TMSP	TMSP	TMSP	TMSP	TMSP	TMSP	TMSP	TMSP
15		TMSP	TMSP	TMSP	TMSP	TMSP	TMSP	TMSP	TMSP

Table 7-11 Assembly of the Standard Header

7.7.4 Dlt Extended Header

The Extended Header will be transmitted if the UEH bit (Use Extended Header) is set in the Standard Header.

[Dlt116] ⌈The Extended Header shall be transmitted in the case of a verbose mode of the payload because it holds information about the Dlt log or trace message like Context ID and Application ID.
In the case of a non-verbose mode this information can be stored in an external file and reassigned (by an external client) with the Message ID which is provided in the payload. ⌋(BSW35000013)

[Dlt117] ⌈The Extended Header shall be transmitted in case of transmitting control messages (see chapter 7.7.7.1).

The following table gives an overview of the composition of the Extended Header. Detailed description of the entries follows. ⌋(BSW35000002)

[Dlt457] ⌈The Extended Header shall contain these entries

Position in bytes	Number of bits	Name	Short Description
0	8	Message Info (MSIN)	

Position in bytes	Number of bits	Name	Short Description
	bit 0	Verbose (VERB)	If set, a description of the transmitted data is provided within the payload. If not set, this information will be given within a file.
	bit 1-3	Message Type (MSTP)	Enum of following types: DLT_TYPE_LOG 0x0 DLT_TYPE_APP_TRACE 0x1 DLT_TYPE_NW_TRACE 0x2 DLT_TYPE_CONTROL 0x3
		Message Type Info (MTIN) depends on **Message Type (MSTP)**	
	bit 4-7	**Message Log Info (MSLI)** *If* MSTP == DLT_TYPE_LOG	DLT_LOG_FATAL 0x1 DLT_LOG_ERROR 0x2 DLT_LOG_WARN 0x3 DLT_LOG_INFO 0x4 DLT_LOG_DEBUG 0x5 DLT_LOG_VERBOSE 0x6
		Message Trace Info (MSTI) *If* MSTP == DLT_TYPE_APP_TRACE	DLT_TRACE_VARIABLE 0x1 DLT_TRACE_FUNCTION_IN 0x2 DLT_TRACE_FUNCTION_OUT 0x3 DLT_TRACE_STATE 0x4 DLT_TRACE_VFB 0x5
		Message Bus Info (MSBI) *If* MSTP == DLT_TYPE_NW_TRACE	DLT_NW_TRACE_IPC 0x1 DLT_ NW_TRACE _CAN 0x2 DLT_ NW_TRACE _FLEXRAY 0x3 DLT_ NW_TRACE _MOST 0x4 Reserved 0x5-0x7 UserDefined 0x8-0x15
		Message Control Info (MSCI) *If* MSTP == DLT_TYPE_CONTROL	DLT_CONTROL_REQUEST 0x1 DLT_CONTROL_RESPONSE 0x2 DLT_CONTROL_TIME 0x3
1	8	Number of arguments (NOAR)	Number of arguments in the message payload
2-5	32	Application ID (APID)	Number / ID of application – interpreted as 4 ASCII characters

Position in bytes	Number of bits	Name	Short Description
6-9	32	Context ID (CTID)	Unique ID of logging / tracing context – interpreted as 4 ASCII characters

Table 7-12 Overview of the Extended Header

⌋(BSW35000019, BSW35000020, BSW35000021)

7.7.4.1 Message Info (MSIN)

[Dlt118] ⌈Message Info shall be interpreted as an 8-bit field. The included bits are VERB, MSTP (3 bit) and MTIN (4 bit).

	Bit Position							
Offset	**0**	**1**	**2**	**3**	**4**	**5**	**6**	**7**
0	VERB	MSTP	MSTP	MSTP	MTIN	MTIN	MTIN	MTIN

Table 7-13 Assembly of the Message Info in Extended Header

⌋()

7.7.4.1.1 Verbose (VERB)

The VERB bit indicates, if the payload is transmitted in verbose or in non-verbose mode. If the VERB bit is not set, a description of the transmitted data is provided externally, e.g. in an external file.

[Dlt119] ⌈If the VERB bit is set, the payload shall be transmitted in verbose mode.⌋ (BSW35000044)

[Dlt310] ⌈If the VERB bit is not set, the payload shall be transmitted in non-verbose mode.⌋ (BSW35000024)

7.7.4.1.2 Message Type (MSTP)

The value of this field describes the transmitted Dlt message

[Dlt324] ⌈Message Type is a 3-bit unsigned integer. ⌋()

[Dlt120] ⌈Message Type shall have one of the following values:

Value	Name	Description
0x0	DLT_TYPE_LOG	The transmitted message is a log message
0x1	DLT_TYPE_APP_TRACE	The transmitted message is a trace of a SW-C or VFB [1].
0x2	DLT_TYPE_NW_TRACE	The transmitted message contains a trace of received or sent network messages.
0x3	DLT_TYPE_CONTROL	The transmitted message is a control message. This message can be sent from and to an ECU. It contains control information for connection management, timing issues and for configuration of the Dlt BSW module.

Table 7-14 Message Types of Dlt messages (MSTP)

⌋()

7.7.4.1.3 Message Type Info (MTIN)

[Dlt325] ⌈Message Type Info is a 4-bit unsigned integer. ⌋()

[Dlt121] ⌈The content of the MTIN field depends on the MSTP field according to the following table:

Message Type (MSTP)	Corresponding Message Type Info (MTIN)
DLT_TYPE_LOG	Message Log Info (MSLI)
DLT_TYPE_APP_TRACE	Message Trace Info (MSTI)
DLT_TYPE_NW_TRACE	Message Bus Info (MSBI)
DLT_TYPE_CONTROL	Message Control Info (MSCI)

Table 7-15 Relation between Message Type Info (MTIN) and Message Type (MSTP)

⌋()

7.7.4.1.4 Message Log Info (MSLI)

[Dlt122] ⌈If MSTP equals DLT_TYPE_LOG, MTIN shall have one of following values:

Value	Name	Description
0x1	DLT_LOG_FATAL	Fatal system errors, should be very rare
0x2	DLT_LOG_ERROR	Errors occurring in a SW-C with impact to correct functionality
0x3	DLT_LOG_WARN	Log messages where a incorrect behavior can not be ensured

[1] Unlike in a log message a trace can only be turned on or off. Trace messages can have additional attributes like function-in/out. Trace may not be enabled in production phase.

Value	Name	Description
0x4	DLT_LOG_INFO	Log messages providing information for better understanding of the internal behavior of a software
0x5	DLT_LOG_DEBUG	Log messages, which are usable only for debugging of a software
0x6	DLT_LOG_VERBOSE	Log messages with the highest communicative level, here all possible states, information and everything else can be logged

Table 7-16 Possible MSLI values

⌋(BSW35000019)

7.7.4.1.5 Message Trace Info (MSTI)

[Dlt123] ⌈If MSTP equals DLT_TYPE_APP_TRACE, MTIN shall have one of following values:

Value	Name	Description
0x1	DLT_TRACE_VARIABLE	For tracing the value of a variable
0x2	DLT_TRACE_FUNCTION_IN	For tracing the calling of a function
0x3	DLT_TRACE_FUNCTION_OUT	For tracing the returning of a function
0x4	DLT_TRACE_STATE	For tracing a state of a state machine
0x5	DLT_TRACE_VFB	For tracing RTE Events

Table 7-17 Possible MSTI values

⌋()

7.7.4.1.6 Message Control Info (MSCI)

[Dlt124] ⌈If MSTP equals DLT_TYPE_CONTROL, MTIN shall have one of following values:

Value	Name	Description
0x1	DLT_CONTROL_REQUEST	For sending a request message from an external client to the Dlt module
0x2	DLT_CONTROL_RESPONSE	For answering the request message by the Dlt module with a response message
0x3	DLT_CONTROL_TIME	For keep-alive messages

Table 7-18 Possible MSCI values

⌋()

7.7.4.1.7 Message bus Info (MSBI)

[Dlt125] ⌈If MSTP equals DLT_TYPE_NW_TRACE, MTIN shall have one of following values:

Value	Name	Description
0x1	DLT_NW_TRACE_IPC	Inter-Process-Communication
0x2	DLT_NW_TRACE_CAN	Controller Area Network Bus
0x3	DLT_NW_TRACE_FLEXRAY	FlexRay Bus
0x4	DLT_NW_TRACE_MOST	Media Oriented Systems Transport Bus
0x5 – 0x7	Reserved	Reserved for future use
0x8 – 0x15	User Defined	User Defined settings

Table 7-19 Possible MSBI values

⌋()

7.7.4.2 Number of Arguments (NOAR)

Number of Arguments is number of consecutive parameters in the payload of one Dlt message.

[Dlt326] ⌈Number of Arguments is an 8-bit unsigned integer. ⌋()

[Dlt126] ⌈Number of Arguments shall contain in Verbose Mode the number of provided arguments within the payload. In Non Verbose Mode it shall contain 0x0. ⌋()

7.7.4.3 Application ID (APID)

Application ID is an abbreviation of the SW-C/BSW module (see 7.1.7).

[Dlt127] ⌈Application ID is a 32-bit field interpreted as four 8-bit ASCII characters.⌋(BSW35000021)

[Dlt312] ⌈If the Application ID is shorter than four 8-bit ASCII characters, the remaining characters shall be filled by 0x00. ⌋()

7.7.4.4 Context ID (CTID)

Context ID is a user defined ID to group log and trace messages (see 7.1.8).

[Dlt128] ⌈Context ID is a 32-bit field interpreted as four 8-bit ASCII characters.⌋ (BSW35000021)

[Dlt313] ⌈If the Context ID is shorter than four 8-bit ASCII characters, the remaining characters shall be filled by 0x00.

It represents the context, which the message belongs to. ⌋ ()

7.7.4.5 Assembly of Extended Header

		Bit position							
Offset to Extended Header start pos in byte	**Field Name**	**0**	**1**	**2**	**3**	**4**	**5**	**6**	**7**
0	**MSIN**	VERB	MSTP	MSTP	MSTP	MTIN	MTIN	MTIN	MTIN
1	**NOAR**	NOAR	NOAR	NOAR	NOAR	NOAR	NOAR	NOAR	NOAR
2	**APID**	APID	APID	APID	APID	APID	APID	APID	APID
3		APID	APID	APID	APID	APID	APID	APID	APID
4		APID	APID	APID	APID	APID	APID	APID	APID
5		APID	APID	APID	APID	APID	APID	APID	APID
6	**CTID**	CTID	CTID	CTID	CTID	CTID	CTID	CTID	CTID
7		CTID	CTID	CTID	CTID	CTID	CTID	CTID	CTID
8		CTID	CTID	CTID	CTID	CTID	CTID	CTID	CTID
9		CTID	CTID	CTID	CTID	CTID	CTID	CTID	CTID

Table 7-20 Assembly of Extended Header

7.7.5 Payload

The payload holds the parameters that will be logged or traced. More precisely the payload consists of the buffer that will be passed in the API containing the parameters to be logged or traced. For detailed information, see 8.4.2 and 8.4.2.4.

The payload adjoins next to the Standard Header or the Extended Header, depending on the UEH bit.

[Dlt314] ⌈If the UEH bit is set, the payload shall adjoin the Extended Header. ⌋ (BSW35000013, BSW35000023)

[Dlt315] ⌈If the UEH bit is not set, the payload shall adjoin the Standard Header.

There are two modes for transmitting the payload – Verbose Mode and Non-Verbose Mode. The bit Verbose (VERB) in the Extended Header specifies which mode is used. ⌋(BSW35000013, BSW35000023)

7.7.5.1 Non-Verbose Mode

There are two types of data relevant in the Non-Verbose Mode – static data and non-static data, detailed description of the data types follows. Non-static data with its unique identifier ID is transmitted in the payload in Non-Verbose Mode. This unique Message ID (see 7.7.5.1.1) is assigned to the non-static data in order that the receiver can reassign the data. Only the Message ID with the non-static data are transmitted within the Dlt message. Static data is not transmitted in the payload in Non-Verbose Mode.

The assembly of a Dlt message in Non-Verbose Mode is shown in the following table.

[Dlt460] ⌈If non-verbose mode is used the packet format in Table 7-21 shall be used.

Length in Byte	Name	Description
4,8,12 or 16	**Standard Header**	Essential information for interpreting the Dlt message
	Payload	
4	Message ID	Message ID is unique for a specific Dlt message. All static information like parameter name and description and static text are associated to this ID. This information is provided by an external file.
x	Non-Static Data	All non-static information of a Dlt message is transmitted here. Static information is associated with the Message ID and is not transmitted.

Table 7-21 Assembly of a Dlt Message in Non-Verbose Mode

Static data are all data that are not modifiable at runtime, like:

- Name of variables
- Unit or description of variables
- Position in the source code (file name and line number)
- Static text

A set of static data is assigned to a unique Message ID.⌋ (BSW35000024, BSW35000027)

[Dlt129] ⌈Static data shall not be transmitted in the Non-Verbose Mode.

Non-static data are all modifiable data, like values of variables. Only non-static data shall be transmitted within non-verbose mode.
The Non-Verbose Mode can be used in small ECU's with low memory and / or within a network with limited bandwidth. Because static data are not transmitted, the data also need not to be stored on the ECU's RAM/ROM. ⌋()

7.7.5.1.1 Message ID

The Message ID is associated with additional information that contains all static data and allows the receiver to interpret all non-static data received. This additional information is provided externally (e.g. by an external file). Any number of data and any data type can be associated with a single Message ID. The receiver can interpret the data with the external description. For one Message ID there is only one unique description of the transmitted data and one combination of static data is assigned to one unique Message ID.

[Dlt329] ⌈Message ID is a 32-bit unsigned integer. ⌋()

[Dlt352] ⌈Message ID shall be assigned unique for a single combination of static data.⌋(BSW35000025, BSW35000027)

[Dlt353] ⌈With the combination of a Message ID and an external description, following information shall be recoverable that is otherwise provided in the Type Info:
- Type Length
- Data Type
- String Coding
- Variable Info
- Fixed Point ⌋()

[Dlt134] ⌈With the combination of a Message ID and an external description, following information shall be recoverable that is otherwise provided in the Extended Header:
- Message Type (MSTP)
- Message Info (MSIN)
- Number of arguments (NOAR)
- Application ID (APID)
- Context ID (CTID) ⌋()

7.7.5.1.2 Assembly of Non-Static Data

This example will demonstrate how the non-static data is assembled, transmitted and interpreted.

Following information will be transmitted to an external client by the sending of a log message:

- static text: “Temperature measurement”
- 8-bit unsigned integer: measurement_point = 1 (no unit)
- 32-bit float: reading = 22.1 Kelvin

There is a unique Message ID that characterize this log message call on this specific position in the source code. Following information is associated with this Message ID:

- position in source code: source file “temp_meas.c”, line number 42
- static text: “Temperature measurement”
- expecting the value of a 8-bit unsigned integer with variable name = “measurement_point” and unit = “”
- expecting the value of a 32-bit float with variable name = “reading” and unit = “Kelvin”

All static data is already associated with the Message ID and only the non-static data will be transmitted:

Length in Bit	Value	Description
8	1	8-bit unsigned integer
32	22.1	32-bit float

Table 7-22 Assembly of non-static data in Non-Verbose Mode

Based on the Message ID, the receiver can reassemble all static data of this Dlt message (position in source code, static text, variable names and units). The non-static data will be transmitted consistently packed. The interpretation is possible by using the information associated with the Message ID. Also the ordering of the arguments is associated with the Message ID.

[Dlt378] ⌈The non-static data shall be transmitted consistently packed and byte aligned.⌋ (BSW35000014, BSW35000023)

7.7.5.1.3 Description Format for transmitted Data

An external file holds the information how the payload shall be interpreted. For describing transmitted messages which are in non verbose mode the ASAM Fibex (Field Bus Exchange Format) shall be used.
The software supplier of a SW-C or the BSW shall provide this description file. Because Dlt can have several sources of log or trace messages (several SW-Cs, Dem, Det) the provided description files can be merged to one file for a given ECU.

Each Fibex description file for describing Non Verbose messages only corresponds to log or trace messages for one ECU. This is because Message IDs are only unique

per ECU. Additionally the Software Version Number of the ECU has to be provide by the description file.

[Dlt402] ⌈Each description file shall contain only one ECU XML-element. ⌋()

[Dlt403] ⌈The ECU XML-element shall be extended by a SW_VERSION XML-element.

In principle each log or trace message is comparable to a PDU known in some network protocols. Here the description of a log or trace message shall be equivalent to a CAN-Frame specified by Fibex. The information from the Extended Header is put in additionally XML-elements inside the FRAME-TYPE XML-element. The Non-Static Data is described by PDU and SIGNAL XML-elements.

As seen from the user, a log or trace message has several arguments. These arguments can be static text or non static variables. Only the non static variables data is transmitted. To reassemble the whole message with all arguments, a FRAME XML-element shall contain some empty PDU XML-elements which represents arguments with static text. This text shall be placed in the DESC XML-element of the PDU XML-element. ⌋()

[Dlt418] ⌈The ASAM Fibex Standard (Field Bus Exchange Format) Version 3.0 shall be used for describing a Non Verbose message.⌋(BSW35000024, BSW35000026)

[Dlt396] ⌈One log or trace message shall be represented by one FRAME XML-element in Fibex. ⌋()

[Dlt397] ⌈The Message ID shall be the ID attribute of the <FRAME> XML-element. ⌋ ()

[Dlt398] ⌈The <FRAME-TYPE> XML-element shall be extended by the following XML-elements:

- Message Type (MSTP) – MESSAGE_TYPE
- Message Info (MSIN) – MESSAGE_INFO
- Application ID (APID) – APPLICATION_ID
- Context ID (CTID) – CONTEXT_ID
- Source file – MESSAGE_SOURCE_FILE
- line number – MESSAGE_LINE_NUMBER ⌋(BSW35000026, BSW35000027)

[Dlt399] ⌈The user data of the log or trace message shall be represented by several PDU XML-elements. Each argument shall get one PDU XML-element. ⌋()

[Dlt400] ⌈If the argument contains only static text, this text shall be placed in the DESC XML-element of the PDU. In this case the BYTE-LENGTH of the PDU XML-element shall be zero.⌋(BSW35000025)

[Dlt401] ⌈If the argument contains “Non-Static Data” the data transported in the message is described within the PDU as SIGNAL XML-element.⌋ (BSW35000026)

The following example shows the description of a sample Dlt message in FIBEX XML.

```
<fx:FRAME ID="ID 1">
     <ho:SHORT-NAME>Dlt Message with ID 1</ho:SHORT-NAME>
     <fx:BYTE-LENGTH>1</fx:BYTE-LENGTH>
     <fx:FRAME-TYPE>OTHER</fx:FRAME-TYPE>
     <fx:PDU-INSTANCES>
          <fx:PDU-INSTANCE ID="P 1 0">
               <fx:PDU-REF ID-REF="PDU 1 0"/>
               <fx:SEQUENCE-NUMBER>0</fx:SEQUENCE-NUMBER>
          </fx:PDU-INSTANCE>
          <fx:PDU-INSTANCE ID="P 1 1">
               <fx:PDU-REF ID-REF="PDU 1 1"/>
               <fx:SEQUENCE-NUMBER>1</fx:SEQUENCE-NUMBER>
          </fx:PDU-INSTANCE>
          <fx:PDU-INSTANCE ID="P 1 2">
               <fx:PDU-REF ID-REF="PDU 1 2"/>
               <fx:SEQUENCE-NUMBER>2</fx:SEQUENCE-NUMBER>
          </fx:PDU-INSTANCE>
     </fx:PDU-INSTANCES>
     <fx:MANUFACTURER-EXTENSION>
          <MESSAGE TYPE>DLT TYPE LOG</MESSAGE TYPE>
          <MESSAGE INFO>DLT LOG DEBUG</MESSAGE INFO>
          <APPLICATION ID>APPI</APPLICATION ID>
          <CONTEXT ID>CONI</CONTEXT ID>
          <MESSAGE SOURCE FILE>demo.c</MESSAGE SOURCE FILE>
          <MESSAGE LINE NUMBER>72</MESSAGE LINE NUMBER>
     </fx:MANUFACTURER-EXTENSION>
</fx:FRAME>
<!--================ 1. Parameter ==================-->
<fx:PDU ID="PDU 1 0">
     <ho:SHORT-NAME></ho:SHORT-NAME>
     <ho:DESC>Temperature measurement</ho:DESC>
     <fx:BYTE-LENGTH>0</fx:BYTE-LENGTH>
     <fx:PDU-TYPE>OTHER</fx:PDU-TYPE>
</fx:PDU>
<!--================ 2. Parameter ==================-->
<fx:PDU ID="PDU 1 1">
     <ho:SHORT-NAME>measurement point</ho:SHORT-NAME>
     <fx:BYTE-LENGTH>1</fx:BYTE-LENGTH>
     <fx:PDU-TYPE>OTHER</fx:PDU-TYPE>
     <fx:SIGNAL-INSTANCES>
       <fx:SIGNAL-INSTANCE ID="S 1 0">
          <fx:SEQUENCE-NUMBER>0</fx:SEQUENCE-NUMBER>
          <fx:SIGNAL-REF ID-REF="S UINT8"/>
       </fx:SIGNAL-INSTANCE>
     </fx:SIGNAL-INSTANCES>
</fx:PDU>
<!--================ 3. Parameter ==================-->
<fx:PDU ID="PDU 1 2">
     <ho:SHORT-NAME>reading</ho:SHORT-NAME>
     <fx:BYTE-LENGTH>1</fx:BYTE-LENGTH>
```

```
      <fx:PDU-TYPE>OTHER</fx:PDU-TYPE>
      <fx:SIGNAL-INSTANCES>
        <fx:SIGNAL-INSTANCE ID="S 1 0">
           <fx:SEQUENCE-NUMBER>0</fx:SEQUENCE-NUMBER>
           <fx:SIGNAL-REF ID-REF="FLOA32"/>
        </fx:SIGNAL-INSTANCE>
      </fx:SIGNAL-INSTANCES>
</fx:PDU>
```

7.7.5.2 Verbose Mode

In contrary to the Non-Verbose Mode, the Verbose Mode provides all information for interpreting the transmitted data within the message. The data is self-describing. All static information like strings is transmitted. No extra description file is needed, because of transmitting all information within the log and trace message.

The Verbose Mode can be used on ECU's where enough memory and high network bandwidth are available. Because of the self-description, the stored data on the external client is interpretable at any time and without any further information.

7.7.5.2.1 Dlt Message Format in General

In Verbose Mode, any desired number of arguments can be transmitted. The information about the payload is provided within the message. The payload adjoins the Extended Header and consists of one or more arguments. The number of arguments in the payload is specified in the Extended Header in the field Number of arguments (NOAR).

Each argument consists of a "Type Info" field and the appended Data Payload. In "Type Info" field the necessary information is provided to interpret the following data structure.

[Dlt459] ⌈The assembly of a Dlt message in Verbose Mode is shown in the following table (Table 7-23) and shall be in this format.

Length (byte)		Name	Short Description
4,8,12 or 16		**Standard Header**	Essential information for interpreting the Dlt message
10		**Extended Header**	Additional information about the Dlt message
		Payload - *list of arguments*	
		Argument 1	
	4	Type Info	Essential information for interpreting the Data Payload
	x	Data Payload	Data and optional additional parameters like variable info
		Argument n	

Length (byte)		Name	Short Description
	4	Type Info	Essential information for interpreting the Data Payload
	x	Data Payload	Data and optional additional parameters like variable info
		End of list of arguments	

Table 7-23 Assembly of a Dlt Message in Verbose Mode

⌋(BSW35000023, BSW35000044)

[Dlt409] ⌈The arguments and all inherited data shall be transmitted consistently packed. ⌋(BSW35000023)

7.7.5.2.2 Type Info

[Dlt421] ⌈The bit field Type Info shall be used, if the Verbose (VERB) bit is set AND if Message Type (MSTP) equals DLT_TYPE_LOG or DLT_TYPE_APP_TRACE.

With Type Info, the correct structure of the following Data is chosen automatically.⌋ (BSW35000044)

[Dlt135] ⌈Type Info is a bit field of 32 bit. Following Bit field shall be used for Type Info:

Bit position	Name	Description
Bit 0 - 3	Type Length (TYLE)	the length of the standard data 0x00 = not defined 0x01 = 8 bit 0x02 = 16 bit 0x03 = 32 bit 0x04 = 64 bit 0x05 = 128 bit 0x06 - 0x07 reserved for future use
Bit 4	Type Bool (BOOL)	is set if the data is a bool data
Bit 5	Type Signed (SINT)	is set if the data is a signed integer data
Bit 6	Type Unsigned (UINT)	is set if the data is a unsigned integer data
Bit 7	Type Float (FLOA)	is set if the data is a float data
Bit 8	Type Array (ARAY)	is set if the data is an array of standard types
Bit 9	Type String (STRG)	is set if the data is a string
Bit 10	Type Raw (RAWD)	is set if the data is raw data
Bit 11	Variable Info (VARI)	is set if additional information to a variable (like name, unit) is given.
Bit 12	Fixed Point (FIXP)	is set if quantization and offset are added

Bit position	Name	Description
Bit 13	Trace Info (TRAI)	is set if additional trace information is added (like module name / function name)
Bit 14	Type Struct (STRU)	is set if the data is a struct like specified in C (for future use)
Bit 15 – 17	String Coding (SCOD)	is the coding of the Type String (STRG) 0x00 = ASCII 0x01 = UTF-8 0x02 - 0x07 reserved for future use
Bit 18 – 31	reserved for future use	

Table 7-24 Assembly of Type Info

The table below shows a simplified assembly of Type Info

		Bit position							
Offset to start pos in byte	**Field Name**	**0**	**1**	**2**	**3**	**4**	**5**	**6**	**7**
0	Type Info	TYLE	TYLE	TYLE	TYLE	BOOL	SINT	UINT	FLOA
1	Type Info	ARAY	STRG	RAWD	VARI	FIXP	TRAI	STRU	SCOD
2	Type Info	SCOD	SCOD	-	-	-	-	-	-
3	Type Info	-	-	-	-	-	-	-	-

Table 7-25 Simplified Assembly of Type Info

The entries of Type Info are specified in the following section in detail.⌋ (BSW35000044)

Bits Type Length (TYLE)

Type Length specifies the length of the standard data type.

[Dlt354] ⌈Type Length is a bit field of 4 bit.

Type Info contains

- 1 (8 bit) for bool data (BOOL)
- 1 (8 bit) or 2 (16 bit) or 3 (32 bit) or 4 (64 bit) or 5 (128 bit) for signed (SINT) and unsigned integer data (UINT)
- 2 (16 bit) or 3 (32 bit) or 4 (64 bit) or 5 (128 bit) for float data (FLOA) ⌋ ()

Bit Variable Info (VARI)

If Variable Info (VARI) is set, the name and the unit of a variable can be added. Both always contain a length information field and a field with the text (of name or unit). The length field contains the number of characters of the associated name or unit filed. The unit information is to add only in some data types.

[Dlt410] ⌈The coding of all text in Variable Info (VARI) shall be in 8-bit ASCII format. ⌋()

[Dlt411] ⌈The strings in VARI shall be null terminated. ⌋()

***Bit* Fixed Point (FIXP)**

If fixed point values are used, the Fixed Point (FIXP) bit shall be set. Than the Data field represents the physical value of a fixed point variable.
For interpreting the fixed point variable the logical value of this variable has to be calculated.
The logical value is calculated by the physical value, the quantization and the offset of fixed point variable.

[Dlt389] ⌈The following equation defines the relation between the logical value (log_v) and the physical value (phy_v), offset and quantization:
log_v = phy_v * quantization + offset ⌋()

[Dlt169] ⌈The bit Fixed Point (FIXP) shall only be set in combination with Type Signed (SINT) or Type Unsigned (UINT). ⌋()

***Bits* String Coding (SCOD)**

String Coding specifies only the coding of string data of Type String (STRG). All other strings like parameter name, unit and description are coded in 8-bit ASCII format.

[Dlt182] ⌈String Coding is a bit field of 3 bit. ⌋()

[Dlt366] ⌈Following values shall be used for String Coding (SCOD):
0x00 = ASCII
0x01 = UTF-8
0x02 - 0x07 reserved for future use ⌋()

[Dlt183] ⌈String Coding shall be set if Type String (STRG) is set. ⌋()

[Dlt367] ⌈String Coding shall be set if Trace Info (TRAI) is set. ⌋()

7.7.5.2.3 Data Payload

***Type* Bool (BOOL)**

[Dlt422] ⌈If the BOOL bit is set, the Data Payload shall consist of at least one 8-bit unsigned integer parameter. ⌋ ()

[Dlt423] ⌈If the Data field equals 0x0, it shall be interpreted as FALSE. If the Data field equals 0x1 it shall be interpreted as TRUE. ⌋ ()

[Dlt139] ⌈Type Length (TYLE) shall be 1. ⌋ ()

[Dlt355] ⌈If Variable Info (VARI) is set, the Length of Name, the Name and the Unit fields shall be added. ⌋ ()

[Dlt369] ⌈The Data Payload of Type Bool (BOOL) shall be assembled as shown in following table.

Length in bit		**Name**	**Description**
If **Variable Info (VARI)** is set in Type Info			
	16	Length of Name + termination char.	Unsigned 16-bit integer
	x	Name	Null terminated string (name of variable)
8		**Data**	0x0 if value is FALSE or 0x1 if value is TRUE

Table 7-26 Data Payload of Type Bool (BOOL)

⌋ ()

***Type* Signed (SINT) and *Type* Unsigned (UINT)**

The SINT and UINT Data Payload are assembled in the same way. The only difference is in interpreting the Data field.

[Dlt385] ⌈If the SINT bit is set, the Data Payload consists of at least one signed integer Data field. ⌋ ()

[Dlt386] ⌈If the UINT bit is set, the Data Payload consists of at least one unsigned integer Data field.

Variable Info (VARI) and Fixed Point (FIXP) are optional.

Length in bit	**Name**	**Description**

Length in bit		Name	Description
If **Variable Info (VARI)** is set in Type Info			
	16	Length of Name + termination char.	Unsigned 16-bit integer
	16	Length of Unit + termination char.	Unsigned 16-bit integer
	x	Name	Null terminated string (name of variable)
	x	Unit	Null terminated string (unit of variable)
If **Fixed Point (FIXP)** is set in Type Info			
	32	Quantization	32-bit float
	32 / 64 / 128	Offset	Signed integer - with the length of at least 32 bit. The length shall be: 32 bit if Type Length (TYLE) equals 1,2 or 3 64 bit if Type Length (TYLE) equals 4 or 128 bit if Type Length (TYLE) equals 5
8/16/32 / 64 / 128		**Data**	Length depends on TYLE

Table 7-27 Data Payload of Type Signed (SINT) and Type Unsigned (UINT)

⌋()

[Dlt356] ⌈Type Length (TYLE) shall be set to 1, 2, 3, 4 or 5. ⌋()

[Dlt357] ⌈If Variable Info (VARI) is set, the “Length of Name”, “Length of Unit”, the “Name” and the “Unit” fields shall be added. ⌋()

[Dlt412] ⌈If FIXP is set, the Quantization and Offset fields shall be added. ⌋()

[Dlt388] ⌈The Quantization field shall be a 32-bit float field. ⌋()

[Dlt387] ⌈The Offset field is a singed integer field with at least 32 bit. If the TYLE equals 4 the Offset field shall be a 64 singed integer field and if the TYLE equals 5 the Offset field shall be a 128 singed integer field. ⌋()

[Dlt358] ⌈The length of Data shall depend on Type Length (TYLE). ⌋()

[Dlt370] ⌈The Data Payload of Type Signed (SIGN) and of Type Unsigned (UINT) shall be assembled as shown in Table 7-27. ⌋()

***Type* Float (FLOA)**

[Dlt390] ⌈If the bit Type Float (FLOA) is set, the Data Payload shall consist of at least one Data field, which shall be interpreted as a float variable.

Variable Info (VARI) is optional.

Length in bit		**Name**	**Description**
If **Variable Info (VARI)** is set in Type Info			
	16	Length of name + termination char.	Unsigned 16-bit integer
	16	Length of unit + termination char.	Unsigned 16-bit integer
	x	Name	Null terminated string (name of variable)
	x	Unit	Null terminated string (unit of variable)
8/16/32 / 64 / 128		**Data**	Float data length depends on TYLE

Table 7-28 Data Payload of Type Float (FLOA)

⌋()

[Dlt145] ⌈Type Length (TYLE) shall be set to 2, 3, 4 or 5 as specified in IEEE 754r:

Type Length (TYLE)	Type	Length	Mantissa	Exponent
2	b16 bit	16 bit	10 bit	5
3	b32 bit (single)	32 bit	23 bit	8
4	b64 bit (double)	64 bit	52 bit	11
5	b128	128 bit	112 bit	15

Table 7-29 Definition of Type Length according to IEEE 754r

⌋()

[Dlt362] ⌈If Variable Info (VARI) is set, the “Length of Name”, “Length of Unit”, the “Name” and the “Unit” fields shall be added. ⌋()

[Dlt363] ⌈The length of Data shall depend on Type Length (TYLE). ⌋()

[Dlt371] ⌈The argument of Type Float (FLOA) shall be assembled as shown in Table 7-28. ⌋()

***Type* String (STRG)**

[Dlt420] ⌈If the bit Type String (STRG) is set, the Data Payload shall consist of at least one Data field, which shall be interpreted as a string variable.⌋ (BSW35000025)

[Dlt155] ⌈String Coding (SCOD) shall be specified. ⌋ ()

[Dlt392] ⌈The string in the Data field shall be interpreted with the type corresponding to the String Coding (SCOD) field in the Type Info field. ⌋ ()

[Dlt156] ⌈At the beginning of the Data Payload, a 16-bit unsigned integer specifies the length of the string (provide in the Data field) in byte including the termination character. ⌋ ()

[Dlt157] ⌈If Variable Info (VARI) is set, the "Length of Name" and the "Name" fields shall be added. ⌋ ()

[Dlt373] ⌈The Data Payload of Type String (STRG) shall be assembled as shown in following table.

Length in bit		Name	Description
16		Length of string + termination char.	Unsigned 16-bit integer
If **Variable Info (VARI)** is set in Type Info			
	16	Length of name + termination char.	Unsigned 16-bit integer
	x	Name	Null terminated string (name of variable)
x		**Data** string	Null terminated data string

Table 7-30 Data Payload of Type String (STRG)

⌋ ()

***Type* Array (ARAY)**

[Dlt147] ⌈If the bit Type Array is set, the Data Payload shall consist of an n-dimensional array of one or more data types of bool (BOOL), signed integer (SINT), unsigned integer (UINT) or float (FLOA) data types. The TYLE field and FIXP field shall be interpreted as in the standard data types. ⌋ ()

[Dlt148] ⌈At the beginning of the Data Payload a 16-bit unsigned integer shall specify the number of dimensions of the array. ⌋ ()

[Dlt149] ⌈If Variable Info (VARI) is set, the name of the array shall be described. ⌋ ()

[Dlt150] ⌈Within the loop over the number of dimensions, a 16-bit unsigned integer shall specify the number of entries in the current dimension. ⌋ ()

[Dlt152] ⌈If Variable Info (VARI) is set, the “Length of Name”, “Length of Unit”, the “Name” and the “Unit” fields shall be added. ⌋ ()

[Dlt153] ⌈If Fixed Point (FIXP) bit is set in the Type Info, the quantization and offset for the entry in the array shall be added.

It is only possible to use the same fixed point calculation for all entries in the array. ⌋ ()

[Dlt372] ⌈The Data Payload of Type Array (ARAY) shall be assembled as shown in following table.

Length in bit		Name	Description
16		Number of dimensions	Unsigned 16-bit integer
Loop over number of dimensions			
	16	Number of entries in current dimension	Unsigned 16-bit integer
Loop *End*			
If **Variable Info (VARI)** is set in Type Info of current dimension			
	16	Length of Name + termination char.	Unsigned 16-bit integer
	16	Length of Unit + termination char.	Unsigned 16-bit integer
	x	Name	Null terminated string (name of current dimension)
	x	Unit	Null terminated string (unit of current dimension)
If **Fixed Point (FIXP)** is set in Type Info of current dimension			
	32	Quantization	32-bit float
	32 / 64 / 128	Offset	Signed integer of 32 bit if Type Length (TYLE) <= 3 or 64 bit if Type Length (TYLE) = 4 or 128 bit if Type Length (TYLE) = 5
x		**Data** of whole array The data shall be in the same structure/ordering as it is defined in the C90 standard [ii]	

Table 7-31 Data Payload of Type Array (ARAY)

⌋ ()

***Type* Struct (STRU)**

If this bit is set, structured data are transmitted.

[Dlt175] ⌈At the beginning of the Data Payload a 16-bit unsigned integer shall specify the number of entries of the structure or the object.⌋ ()

[Dlt176] ⌈If Variable Info (VARI) is set, the “Length of Name” and the “Name” fields shall be added.⌋ ()

[Dlt177] ⌈The list of entries contains one or more standard arguments with Type Info and Data Payload. All standard argument types are allowed.⌋ ()

[Dlt414] ⌈The Data Payload of Type Struct (STRU) shall be assembled as shown in following table.

Length (bit)		**Name**	**Description**
16		Number of entries in the struct / object	Unsigned 16-bit integer
If **Variable Info (VARI)** is set in Type Info			
	16	Length of name + termination char.	Unsigned 16-bit integer
	x	Name	Null terminated string (name of variable)
List of entries (each entry consists of a standard argument type described above)			
		Entry 1	
	4	Type Info	Essential information for interpreting the Data Payload
	x	Data Payload	Data and optional additional parameters like variable info
		Entry n	
	4	Type Info	Essential information for interpreting the Data Payload
	x	Data Payload	Data and optional additional parameters like variable info
End of list of entries			

Table 7-32 Data Payload of Type Struct (STRU)

⌋ ()

***Type* Raw (RAWD)**

If this bit is set, the Data Payload describes raw data. Variable Info (VARI) is optional.

[Dlt364] ⌈If Variable Info (VARI) is set, the coding of the name shall be in 8-bit ASCII format.⌋ ()

[Dlt160] ⌈At the beginning of the Data Payload a 16-bit unsigned integer shall specify the length of the raw data in byte.⌋ ()

[Dlt161] ⌈If Variable Info (VARI) is set, the "Length of Name" and the "Name" fields shall be added.

The interpretation of the Data field in the case of a Raw argument can not be done. Some tools can show this data by a user defined data type.⌋ ()

[Dlt374] ⌈The Data Payload of Type Raw (RAWD) shall be assembled as shown in following table.

Length in bit		Name	Description
16		Length of raw data in byte	Unsigned 16-bit integer
If **Variable Info (VARI)** is set in Type Info			
	16	Length of Name + termination char.	Unsigned 16-bit integer
	x	Name	Null terminated string (description of variable)
x		**Data**	Raw data

Table 7-33 Data Payload of Type Raw (RAWD)

⌋ ()

***Type* Trace Info (TRAI)**

Trace info is a separate argument in the Dlt message.

[Dlt170] ⌈If the bit Trace Info (TRAI) is set, the trace information (like module name / function) shall be transmitted in the argument.⌋ ()

[Dlt172] ⌈At the beginning of the Data Payload, a 16-bit unsigned integer shall specify the length of the trace data string in byte including the termination character.⌋ ()

[Dlt173] ⌈Null terminated trace data string shall follow.⌋ ()

[Dlt171] ⌈String Coding (SCOD) shall specify the coding of the trace data string.⌋ ()

[Dlt375] ⌈The Data Payload of Trace Info (TRAI) shall be assembled as shown in following table.

Length in bit	Name	Description
16	Length of string + termination char. (in byte)	Unsigned 16-bit integer
x	**Trace Data String**	Null terminated string (like name of module / function in packet)

Table 7-34 Data Payload of Trace Info (TRAI)

⌋()

7.7.5.2.4 Example of representation of natural data type argument

The following example shows the assembly of an 8-bit unsigned integer argument with Variable Info (VARI) bit set in verbose mode.

The Type Info is a 32-bit field that describes the Data. In this example, it defines the variable type (unsigned integer), its length (8 bit) and the presence of Variable Info (VARI) that describes the name and unit of the variable. Variable Info is following with two 16-bit unsigned integers describing the length of the Name and the Unit of the variable. Two null terminated strings follow that describe the Name and the Unit. Finally, the variable value follows. The length of the Data field is 8 bit.

Length in bit		Name	Value	Description
32		**Type Info**	0001 0010 0001 0000 0000 0000 0000 0000	Type Length (TYLE) = 0x1 (8 bit) Type Unsigned (UINT) = 0x1 Variable Info (VARI) = 0x1
Variable Info (VARI) is set in Type Info				
	16	Length of name + termination char.	12	Unsigned 16-bit integer
	16	Length of unit + termination char.	8	Unsigned 16-bit integer
	96 (12*8)	Name	temperature	Null terminated string (name of variable)
	64 (8*8)	Unit	celsius	Null terminated string (unit of variable)
8		**Data**	25	

Table 7-35 Example of the assembly of the payload in verbose mode

List of different Type Info fields bits combinations

The following table shows all combinations of valid settings in Type Info sorted according to the bit position in Type Info.

0-3 TYLE				4 BOOL	5 SINT	6 UINT	7 FLOA	8 ARAY	9 STRG	10 RAWD	11 VARI	12 FIXP	13 TRAI	14 STRU	15-17 SCOD			18-31 RESERVED	
x	x	x	x	x							o								
x	x	x	x		x						o	o							
x	x	x	x			x					o	o							
x	x	x	x				x				o								
									x		o				x	x	x		
										x	o								
													x		x	x	x		
								x			o								
											o			x					
											o								

Table 7-36 Assembly of valid settings in Type Info (o – optional, x – mandatory for this type, empty – not allowed for this type)

The following table shows the mandatory (marked with x) and optional (marked with o) setting according to used variable type:

Valid Settings / Variable Type	Type Length (TYLE)	Variable Info (VARI)	Fixed Point (FIXP)	String Coding (SCOD)
Type Bool (BOOL)	x	o		
Type Signed Integer (SINT)	x	o	o	
Type Unsigned Integer (UINT)	x	o	o	
Type Float (FLOA)	x	o		
Type Array (ARAY)		o		
Type String (STRG)		o		x
Type Raw (RAWD)		o		
Trace Info (TRAI)				x
Type Struct (STRU)		o		

Table 7-37 Assembly of valid settings in Type Info (o – optional, x – mandatory for this type, empty – not allowed for this type)

Using the Verbose Mode helps to understand, analyze and debug the SW-C.

7.7.5.2.5 Recommended arguments

To identify the source of a log or trace message some information to find the location in the source code shall be added to a Dlt message. Therefore the first two arguments in a Dlt message shall be:

- the name of the source file (string) and
- the line number (unsigned integer).

[Dlt424] ⌈The first argument of a log or trace message shall be a string argument where the field “Name” (in Variable Info) contains the string “source_file” and the Data field contains the URL to the source file. ⌋ ()

[Dlt425] ⌈The second argument of a log or trace message shall be a UINT argument (with 32 bit) where the field “Name” (in Variable Info) contains the string “line_number” and the Data field contains the line number in the source file where the log or trace message is sent. ⌋ ()

7.7.6 Additional Message Parts

7.7.6.1 Extensions for storing in a database/file

The Dlt module can leave out some information in the header like timestamp and ECU ID. Therefore, it is important to store some additional information by the receiving external client.

For additionally storing the timestamp and the ECU ID a Storage Header shall be added in front of every received Dlt message.
Timestamp and ECU ID can be left of Dlt side, because of that the receiver shall add this information at receiving time. The Timestamp is also for a better calculating of sequences and timely dependencies by a diagnostic and visualization tool.
Additionally at the beginning of the Storage header a pattern shall be attached. This pattern is for some error recoveries if the byte-stream or file is broken.

[Dlt405] ⌈An external client shall add the Storage Header to a received Dlt message before it stores the message.

Offset	Length (byte)		Name	Description
	Dlt log or trace storage extension			
0	4		DLT-Pattern	“DLT”+0x01 in Hex 0 x 44 4C 54 01
4	8		Timestamp	
		4	seconds	Unsigned integer 32 bit seconds since 01.01.1970 (unix time)
		4	microseconds	Singed integer 32 bit microseconds of the second (between 0 – 1.000.000)
12	4		ECU ID	Four characters the ECU ID
16	**Dlt log or trace message**			
			Header	
			Extended Header	
			Payload	

Table 7-38 Storage Header to store in front of a Dlt message.

⌋()

[Dlt427] ⌈The first entry in the Storage Header shall be a pattern 0 x 44 4C 54 01 (“DLT”+0x1). ⌋()

[Dlt404] ⌈If an external client receives a message it shall store the time when it receives the message additionally to the message in the storage header. ⌋()

[Dlt292] ⌈If an external client receives a message it shall store the ECU ID when it receives the message additionally to the message in the storage header. ⌋()

[Dlt415] ⌈The first message stored in the database/file shall be the response to the “Get ECU Software Version” control message. ⌋()

7.7.7 Predefined messages

To control the internal behavior of the Dlt module it is important to have an interface to make some changes on the configuration of the Dlt module.

[Dlt186] ⌈The Dlt module shall handle the communication with an external client described in this chapter. ⌋()

7.7.7.1 Control messages

Control messages do not contain log or trace information. The use of control messages is to configure the internal behavior of the Dlt module and to get information of registered Application IDs and Context IDs.

NOTE: Control messages can not be send by SW-Cs or BSW modules. They are only exchanged between Dlt and an external client.

[Dlt187] ⌈Control messages are in general normal Dlt messages with a Standard Header, an Extended Header and payload.

Length in Byte	**Elements of the message**	**Description**
4,8,12 or 16	**Standard Header**	ECU equals receiver ECU name
10	**Extended Header**	MSTP equals DLT_TYPE_CONTROL MSCI equals DLT_CONTROL_REQUEST or DLT_CONTROL_RESPONSE
	Payload	
4	**Service_ID**	The service to execute
x	**Parameters**	Data for executing the service

Table 7-39 Overview of the elements of a control message

⌋(BSW35000032)

[Dlt188] ⌈In the Standard Header the Application ID, Context ID, Session ID and Timestamp may be left blank. This means that they should be filled with zeros (0) if it not used otherwise in the control message. The fields Timestamp and SessionID of the Standard Header can be left by setting the bits WSID or WTMS to zero.
All other fields have the same meaning as in a log message, except for the ECU field. If the external client is sending a message to a given ECU, it shall insert the ECU ID of the receiver. ⌋()

[Dlt189] ⌈Control messages shall be sent in Non-Verbose Mode. The description of the transmitted data comes from this specification. ⌋()

[Dlt190] ⌈If a specific functionality like switch to Verbose Mode or message filtering is not implemented in Dlt it shall response with NOT_SUPPORTED. ⌋()

[Dlt416] ⌈If the provided parameters of a request are not correct, Dlt shall answer with status ERROR. ⌋()

[Dlt417] ⌈If a new request is received by Dlt while an old one is not finished it shall answer to the new one with ERROR.⌋ ()

[Dlt191] ⌈The payload shall always begin with the Service_ID. This ID is for identifying the request and the corresponding action to be processed by the Dlt module.⌋ ()

[Dlt192] ⌈The communication procedure between external client and Dlt module on the ECU is like following:

1. The external client sends a request to the Dlt module (MSCI == DLT_CONTROL_REQUEST)
2. The Dlt module receives this request and performs the requested action
3. The Dlt module sends a response (MSCI == DLT_CONTROL_RESPONSE), with the same Service_ID of the request back to the external client.⌋ ()

[Dlt193] ⌈The external client shall not send any new requests until the response of the Dlt module is received. The procedure is synchronous and not reentrant.

If the external client did not receive an answer for a control message from Dlt it can repeat the control message after a timeout. The length of the timeout is chosen by the external client, depending on the performance of the ECU and on the communication channel bandwidth.

The following tables describe the request and response messages for a specific Service_ID. The Service_ID and the request or response parameter represent the payload. The Number column is the ordering of the parameters.⌋ ()

7.7.7.1.1 Set Log Level

[Dlt194] ⌈

Service name:	Set_LogLevel		
Service_ID [hex]	`0x01`		
Sync/Async:	Synchronous		
Reentrancy:	Non Reentrant		
Request Parameter			
Number	***Name***	**Type**	**Description**
1	***Application_ ID***	`4 * uint8`	Representation of the Application ID. If this field is filled with NULL all log level for all Context IDs on this ECU are set.
2	***Context_ID***	`4 * uint8`	Representation of the Context ID • If this field is filled with NULL all Context IDs belonging to the given Application ID are set. • is only interpreted if **Application ID** is not NULL

3	***new_log_level***	`sint8`	the new log level to set • can be in the range of DLT_LOG_FATAL to DLT_LOG_VERBOSE for setting the pass through range • if set to 0 all messages from this Context ID are blocked • if set to -1 the default log level for this ECU will be used
4	***com_interface***	`4*uint8`	This field is used if Dlt supports filtering messaged for different interfaces differently. Than the log level for this interface can be provided. Otherwise it should be filled with zeros. To interpret as a name for a interface Possible values are “DCM” – Interface to the Dcm (Diagnostic Interface) For the Dlt communication module user defined values are allowed, e.g.: “SER1”, “eth0” Not used bytes are filled by zero.
Response Parameter			
Number	***Name***	**Type**	**Description**
1	***Status***	`uint8`	0 == OK 1 == NOT_SUPPORTED 2 == ERROR
Description:	Called to modify the pass through range for log messages for a given Context ID.		

⌋(BSW35000032)

[Dlt195] ⌈Action to process:

Modify the table with Application IDs and Context IDs (see 7.6.4).⌋(BSW35000032)

7.7.7.1.2 Set Default Log Level

[Dlt380] ⌈

Service name:	Set_DefaultLogLevel		
Service_ID [hex]	`0x11`		
Sync/Async:	Synchronous		
Reentrancy:	Non Reentrant		
Request Parameter			
Number	***Name***	**Type**	**Description**
1	***new_log_level***	`sint8`	the new log level to set • can be in the range of DLT_LOG_FATAL to DLT_LOG_VERBOSE for setting the pass through range • if set to 0 all messages are blocked •

2	***com_interface***	`4*uint8`	This field is used if Dlt supports filtering messaged for different interfaces differently. Than the log level for this interface can be provided. Otherwise it should be filled with zeros. To interpret as a name for a interface Possible values are “DCM” – Interface to the Dcm (Diagnostic Interface) For the Dlt communication module user defined values are allowed, e.g.: “SER1”, “eth0” Not used bytes are filled by zero.
Response Parameter			
Number	***Name***	**Type**	**Description**
1	***Status***	`uint8`	0 == OK 1 == NOT_SUPPORTED 2 == ERROR
Description:	Called to modify the pass through range for log messages for all not explicit set Context IDs.		

⌋(BSW35000032)

[Dlt381] ⌈Action to process:

Modify the DltDefaultMaxLogLevel. ⌋(BSW35000032)

7.7.7.1.3 Set Trace Status

[Dlt196] ⌈

Service name:	Set_TraceStatus		
Service ID [hex]	`0x02`		
:			
Sync/Async:	Synchronous		
Reentrancy:	Non Reentrant		
Request Parameter			
Number	***Name***	**Type**	**Description**
1	***Application_ID***	`4 * uint8`	Representation of the Application ID. • If this field is filled with NULL all trace status for all Context IDs on this ECU are set.
2	***Context_ID***	`4 * uint8`	Representation of the Context ID • If this field is filled with NULL all Context IDs belonging to the given Application ID are set. • is only interpreted if **Application ID** is not NULL
3	***new_trace_status***	`sint8`	the new trace status to set • can be 1 – for On and 0 – for Off • if set to -1 the default trace status for this ECU will be used

4	***com_interface***	`4*uint8`	This field is used if Dlt supports filtering messaged for different interfaces differently. Than the log level for this interface can be provided. Otherwise it should be filled with zeros. To interpret as a name for a interface Possible values are "DCM" – Interface to the Dcm (Diagnostic Interface) For the Dlt communication module user defined values are allowed, e.g.: "SER1", "eth0" Not used bytes are filled by zero.
Response Parameter			
Number	***Name***	**Type**	**Description**
1	***Status***	`uint8`	0 == OK 1 == NOT_SUPPORTED 2 == ERROR
Description:	Called to enable or disable trace messages for a given Context ID.		

⌋ (BSW35000032)

7.7.7.1.4 Set Default Trace Status

[Dlt383] ⌈

Service name:	Set_DefaultTraceStatus		
Service_ID [hex]	`0x12`		
Sync/Async:	Synchronous		
Reentrancy:	Non Reentrant		
Request Parameter			
Number	***Name***	**Type**	**Description**
1	***new_trace_status***	`sint8`	the new trace status to set • can be 1 – for On and 0 – for Off
2	***com_interface***	`4*uint8`	This field is used if Dlt supports filtering messaged for different interfaces differently. Than the log level for this interface can be provided. Otherwise it should be filled with zeros. To interpret as a name for a interface Possible values are "DCM" – Interface to the Dcm (Diagnostic Interface) For the Dlt communication module user defined values are allowed, e.g.: "SER1", "eth0" Not used bytes are filled by zero.
Response Parameter			
Number	***Name***	**Type**	**Description**
1	***Status***	`uint8`	0 == OK 1 == NOT_SUPPORTED 2 == ERROR
Description:	Called to enable or disable trace messages for all not explicit set Context IDs		

⌋ (BSW35000032)

[Dlt382] ⌈Action to process:
Modify the default trace status.⌋()

7.7.7.1.5 Get Log Info

[Dlt197] ⌈

Service name:	Get_LogInfo		
Service ID [hex]	`0x03`		
:			
Sync/Async:	Synchronous		
Reentrancy:	Non Reentrant		
Request Parameter			
Number	***Name***	**Type**	**Description**
1	***Options***	`uint8`	• **1 -** reserved • **2 -** reserved • **3** - means only information about registered Application IDs and Context IDs without log level or trace status information • **4** - means information about registered Application IDs and Context IDs with log level and without trace status information • **5** - means information about registered Application IDs and Context IDs without log level and with trace status information • **6** - means information about registered Application IDs and Context IDs with log level and with trace status information • **7** - means information about registered Application IDs and Context IDs with log level and with trace status information and all textual descriptions of each Application ID and Context ID (If DltImplementVerboseMode is not set NOT_SUPPORTED shall be the response)
2	***Application_ID***	`4 * uint8`	Representation of the Application ID. • If this field is filled with NULL all Application IDs with all Context IDs registered with this ECU are requested
3	***Context_ID***	`4 * uint8`	Representation of the Context ID • If this field is filled with NULL all Context IDs belonging to the given Application ID are requested • is only interpreted if **Application ID** is not NULL
4	***com_interface***	`4*uint8`	This field is used if Dlt supports filtering messaged for different interfaces differently. Than the log level for this interface can be provided. Otherwise it should be filled with zeros. To interpret as a name for a interface Possible values are “DCM” – Interface to the Dcm (Diagnostic Interface) For the Dlt communication module user defined values are allowed, e.g.: “SER1”, “eth0” Not used bytes are filled by zero.

Response Parameter			
Number	***Name***	**Type**	**Description**
1	***Status***	`uint8`	• **1** - NOT_SUPPORTED • **2** - ERROR • **3** - means only information about registered Application IDs and Context IDs without log level or trace status information • **4** - means information about registered Application IDs and Context IDs with log level and without trace status information • **5** - means information about registered Application IDs and Context IDs without log level and with trace status information • **6** - means information about registered Application IDs and Context IDs with log level and with trace status information • **7** - means information about registered Application IDs and Context IDs with log level and with trace status information and all textual descriptions of each Application ID and Context ID **NOTE:** In this case the control message shall be in Verbose Mode • **8** – NO matching Context IDs • **9** – RESPONSE DATA OVERFLOW – If the generated response is to large for transmitting a single Dlt message (PDU is 65536 Byte) only Status type RESPONSE DATA OVERFLOW shall be send (No Application_IDs and com_interface entries are transmitted). Than the user could than decide to formulate a less complex request. If the response is not of the Status 1, 2, 8 or 9 it should be the same that is used in the request entry of “Options”.
2	***Application_IDs***	`LogInfoType`	Null if Status == 1 or 2 Response is build like this: 1. Number of Application IDs 2. Application ID + Number of Context IDs 1. Context ID + log level; 2. Context ID + log level; 3. … 3. Application ID + Number of Context IDs 1. Context ID + log level; 2. 4. …l For a detailed description see 7.7.7.1.5.1 to 7.7.7.1.5.3

3	***com_interface***	`4*uint8`	This field is used if Dlt supports filtering messaged for different interfaces differently. Than the log level for this interface can be provided. Otherwise it should be filled with zeros. To interpret as a name for a interface Possible values are “DCM” – Interface to the Dcm (Diagnostic Interface) For the Dlt communication module user defined values are allowed, e.g.: “SER1”, “eth0” Not used bytes are filled by zero.
Description:	Called to request information about registered Application IDs, there Context IDs and the corresponding log level. If DltImplementAppIdContextIdQuery is not set this shall response NOT_SUPPORTED.		

⌋ (BSW35000032, BSW35000033)

7.7.7.1.5.1 LogInfoType

Name:	`LogInfoType`	
Type:	`structure`	
Type field:		
	`uint16 count_app_ids`	
	`AppIDsType[] app_ids`	
Description:		

7.7.7.1.5.2 AppIDsType

Name:	`AppIDsType`	
Type:	`structure`	
Type field:		
	`uint32 app_id`	
	`uint16 count_context_ids`	
	`ContexIDsInfoType[] context_id_info`	
optional, if options ==7	`uint16 len_app_description`	
	`String app_description`	
Description:	Holds information about a specific Application ID	

7.7.7.1.5.3 ContextIDsInfoType

Name:	`ContextIDsInfoType`	
Type:	`structure`	
Type field:		
	`uint32 context_id`	
if options == 4,6 or 7	`sint8 log_level`	
if options == 5,6 or 7	`sint8 trace_status`	
optional, if options == 7	`uint16 len_context_description`	
	`String context_description`	
Description:	Holds information about a specific Context ID	

7.7.7.1.6 Get Default Log Level

[Dlt198] ⌈

Service name:	Get_DefaultLogLevel		
Service ID [hex]	`0x04`		
:			
Sync/Async:	Synchronous		
Reentrancy:	Non Reentrant		
Request Parameter			
Number	***Name***	**Type**	**Description**
none			
Response Parameter			
Number	***Name***	**Type**	**Description**
1	***Status***	`uint8`	0 == OK 1 == NOT_SUPPORTED 2 == ERROR
2	***log_level***	`uint8`	Actual log level
Description:	Returns the actual default log level		

⌋ (BSW35000032)

7.7.7.1.7 Get Default Trace Status

[Dlt494] ⌈

Service name:	Get_DefaultTraceStatus		
Service ID [hex]	`0x15`		
:			
Sync/Async:	Synchronous		
Reentrancy:	Non Reentrant		
Request Parameter			
Number	***Name***	**Type**	**Description**
none			
Response Parameter			
Number	***Name***	**Type**	**Description**
1	***Status***	`uint8`	0 == OK 1 == NOT_SUPPORTED 2 == ERROR
2	***trace_status***	`uint8`	Actual Trace Status 0 - off, 1 - on
Description:	Returns the actual default trace status		

⌋ ()

7.7.7.1.8 Store Configuration

[Dlt199] ⌈

Service name:	Store_Config
Service ID [hex]	`0x05`
:	
Sync/Async:	Synchronous

Reentrancy:	Non Reentrant		
Request Parameter			
Number	***Name***	**Type**	**Description**
none			
Response Parameter			
Number	***Name***	**Type**	**Description**
1	***Status***	`uint8`	0 == OK 1 == NOT_SUPPORTED 2 == ERROR
Description:	Called to store the actual configuration of Dlt to NVRAM (see 7.6.6)		

⌋ ()

7.7.7.1.9 Reset to Factory Default

[Dlt200] ⌈

Service name:	ResetToFactoryDefault		
Service ID [hex]	`0x06`		
:			
Sync/Async:	Synchronous		
Reentrancy:	Non Reentrant		
Request Parameter			
Number	***Name***	**Type**	**Description**
none			
Response Parameter			
Number	***Name***	**Type**	**Description**
1	***Status***	`uint8`	0 == OK 1 == NOT_SUPPORTED 2 == ERROR
Description:	Called to set the configuration of Dlt to factory defaults (see 7.6.6)		

⌋ ()

7.7.7.1.10 Set Communication Interface Status

[Dlt201] ⌈

Service name:	SetComInterfaceStatus		
Service ID [hex]	`0x07`		
:			
Sync/Async:	Synchronous		
Reentrancy:	Non Reentrant		
Request Parameter			
Number	***Name***	**Type**	**Description**
1	***com_interface***	`4*uint8`	To interpret as a name for a interface Possible values are “DCM” – Interface to the Dcm (Diagnostic Interface) For the Dlt communication module user defined values are allowed, e.g.: “SER1”, “eth0” Not used bytes are filled by zero.

2	***new_status***	`uin8`	0 – OFF 1 – ON
Response Parameter			
Number	***Name***	**Type**	**Description**
1	***Status***	`uint8`	0 == OK 1 == NOT_SUPPORTED 2 == ERROR
Description:	Called to enable or disable a specific communication interface.		

⌋ ()

7.7.7.1.11 Get Communication Interface Status

[Dlt501] ⌈

Service name:	GetComInterfaceStatus		
Service ID [hex]	`0x16`		
:			
Sync/Async:	Synchronous		
Reentrancy:	Non Reentrant		
Request Parameter			
Number	***Name***	**Type**	**Description**
1	***com_interface***	`4*uint8`	To interpret as a name for a interface Possible values are “DCM” – Interface to the Dcm (Diagnostic Interface) For the Dlt communication module user defined values are allowed, e.g.: “SER1”, “eth0” Not used bytes are filled by zero.
Response Parameter			
Number	***Name***	**Type**	**Description**
1	***Status***	`uint8`	0 == OK 1 == NOT_SUPPORTED 2 == ERROR 3 == INTERFACE NOT AVAILABLE
2	***if_status***	`uin8`	Current interface status 0 – OFF 1 – ON
Description:	Called to get the status information of a specific communication interface.		

⌋ ()

7.7.7.1.12 Get Communication Interface Names

[Dlt502] ⌈

Service name:	GetComInterfaceNames		
Service ID [hex]	`0x17`		
:			
Sync/Async:	Synchronous		
Reentrancy:	Non Reentrant		
Request Parameter			
Number	***Name***	**Type**	**Description**

none			
Response Parameter			
Number	***Name***	**Type**	**Description**
1	***Status***	`uint8`	0 == OK 1 == NOT_SUPPORTED 2 == ERROR
2	***count_if***	`uin8`	Count of transmitted interface names
3	***com_if_names***	`4*uin8[]`	List of communication interface names. Array on each 4 byte
Description:	Called to get all available communication interfaces.		

⌋ ()

7.7.7.1.13 Set Communication Maximum Bandwidth

[Dlt202] ⌈

Service name:	SetComInterfaceMaxBandwidth		
Service ID [hex]	`0x08`		
:			
Sync/Async:	Synchronous		
Reentrancy:	Non Reentrant		
Request Parameter			
Number	***Name***	**Type**	**Description**
1	***com_interface***	`4*uint8`	To interpret as a name for a interface Possible values are “DCM” – Interface to the Dcm (Diagnostic Interface) For the Dlt communication module user defined values are allowed, e.g.: “SER1”, “eth0”
2	***max_bandwidth***	`uint32`	the maximum bandwidth to allow for this interface in **bit per second**
Response Parameter			
Number	***Name***	**Type**	**Description**
1	***Status***	`uint8`	0 == OK 1 == NOT_SUPPORTED 2 == ERROR
Description:	Called to set the maximum bandwidth for a specific communication interface.		

⌋ (BSW35000030)

7.7.7.1.14 Get Communication Maximum Bandwidth

[Dlt503] ⌈

Service name:	GetComInterfaceMaxBandwidth		
Service ID [hex]	`0x18`		
:			
Sync/Async:	Synchronous		
Reentrancy:	Non Reentrant		
Request Parameter			
Number	***Name***	**Type**	**Description**

1	***com_interface***	`4*uint8`	To interpret as a name for a interface Possible values are “DCM” – Interface to the Dcm (Diagnostic Interface) For the Dlt communication module user defined values are allowed, e.g.: “SER1”, “eth0”
Response Parameter			
Number	***Name***	**Type**	**Description**
1	***Status***	`uint8`	0 == OK 1 == NOT_SUPPORTED 2 == ERROR 3 == INTERFACE NOT AVAILABLE
2	***max_bandwidth***	`uint32`	the maximum bandwidth allowed for this interface in **bit per second**
Description:	Called to get the current maximum bandwidth for a specific communication interface.		

⌋()

7.7.7.1.15 Switch to Verbose Mode

[Dlt489] ⌈In the case of a SetVerboseMode or GetVerboseMode message, the Application ID (APID), Context ID (CTID) and the Session ID (SEID) may be filled in the header and extended header. If they are non zero the pair of APID and CTID together with the SEID (see Session ID in 7.6.4) identifies a unique client server interface of a SW-C/runnable which is called in respect to reception of this message to change the VerboseMode. If this fields are filled with zeros or are left (in case of SEID) all ContextIDs of the ECU shall be informed about the change of the Verbose mode by calling it’s Dlt_SetVerboseMode_<SESSION> functions. ⌋()

[Dlt203] ⌈

Service name:	SetVerboseMode		
Service ID [hex]	`0x09`		
:			
Sync/Async:	Synchronous		
Reentrancy:	Non Reentrant		
Request Parameter			
Number	***Name***	**Type**	**Description**
1	***new_status***	`uint8`	0 – OFF 1 – ON
Response Parameter			
Number	***Name***	**Type**	**Description**
1	***Status***	`uint8`	0 == OK 1 == NOT_SUPPORTED 2 == ERROR
Description:	Called to switch on/off the Verbose Mode. This works only if the Dlt module and all SW-Cs are compiled with Verbose Mode enabled. If DltImplementVerboseMode is not set the response shall be NOT_SUPPORTED.		

⌋()

[Dlt204] ⌈This service modifies the DltUseVerboseMode parameter.⌋()

[Dlt504] ⌈

Service name:	GetVerboseModeStatus		
Service ID [hex]	`0x19`		
:			
Sync/Async:	Synchronous		
Reentrancy:	Non Reentrant		
Request Parameter			
Number	***Name***	**Type**	**Description**
none			
Response Parameter			
Number	***Name***	**Type**	**Description**
1	***Status***	`uint8`	0 == OK 1 == NOT_SUPPORTED 2 == ERROR
2	***mode_status***	`uint8`	0 – OFF 1 – ON
Description:	Called to get f the Verbose Mode. This functionality is optionally, only if the Dlt module can track the verbose mode changes of the SW-C.		

⌋()

7.7.7.1.16 Filter messages

[Dlt205] ⌈

Service name:	SetMessageFilterering		
Service ID [hex]	`0x0A`		
:			
Sync/Async:	Synchronous		
Reentrancy:	Non Reentrant		
Request Parameter			
Number	***Name***	**Type**	**Description**
1	***new_status***	`uint8`	0 – OFF 1 – ON
Response Parameter			
Number	***Name***	**Type**	**Description**
1	***Status***	`uint8`	0 == OK 1 == NOT_SUPPORTED 2 == ERROR
Description:	Called to switch on/off the message filtering by the Dlt module. If DltImplementFilterMessages is not set NOT_SUPPORTED shall be the response.		

⌋()

[Dlt206] ⌈This message modifies DltFilterMessages.⌋()

[Dlt505] ⌈

Service name:	GetMessageFiltereringStatus
Service ID [hex]	`0x1A`

:			
Sync/Async:	Synchronous		
Reentrancy:	Non Reentrant		
Request Parameter			
Number	***Name***	**Type**	**Description**
none			
Response Parameter			
Number	***Name***	**Type**	**Description**
1	***Status***	`uint8`	0 == OK 1 == NOT_SUPPORTED 2 == ERROR
1	***filter_status***	`uint8`	0 – OFF 1 – ON
Description:	Called to get the message filtering status from the Dlt module.		

⌋ ()

7.7.7.1.17 Set Timing Packets

[Dlt207] ⌈

Service name:	SetTimingPackets		
Service ID [hex]	`0x0B`		
:			
Sync/Async:	Synchronous		
Reentrancy:	Non Reentrant		
Request Parameter			
Number	***Name***	**Type**	**Description**
1	***new_status***	`uint8`	0 – OFF 1 – ON
Response Parameter			
Number	***Name***	**Type**	**Description**
1	***Status***	`uint8`	0 == OK 1 == NOT_SUPPORTED 2 == ERROR
Description:	Called to switch on/off the continuous cyclic sending of timing packets. If DltImplementTimestamp is not set NOT_SUPPORTED shall be the response.		

⌋ (BSW35000028)

7.7.7.1.18 Get Local Time

[Dlt208] ⌈

Service name:	GetLocalTime		
Service ID [hex]	`0x0C`		
:			
Sync/Async:	Synchronous		
Reentrancy:	Non Reentrant		
Request Parameter			
Number	***Name***	**Type**	**Description**

none			
Response Parameter			
Number	***Name***	**Type**	**Description**
1	***Status***	`uint8`	0 == OK 1 == NOT_SUPPORTED 2 == ERROR
Description:	Called to get a single packet with timestamp (TMSP). The TSMP (timestamp) field of the standard header from the response control message shall contain a valid timestamp. The TMSP field is used for transmitting the times tamp in the response. Can be used for time calculation algorithm. Shall be answered as fast as possible by the Dlt module. If DltImplementTimestamp is not set NOT_SUPPORTED shall be the response.		

⌋(BSW35000028)

7.7.7.1.19 Use ECU ID

[Dlt209] ⌈

Service name:	SetUseECUID		
Service ID [hex]	`0x0D`		
:			
Sync/Async:	Synchronous		
Reentrancy:	Non Reentrant		
Request Parameter			
Number	***Name***	**Type**	**Description**
1	***new_status***	`uint8`	0 – OFF 1 – ON
Response Parameter			
Number	***Name***	**Type**	**Description**
1	***Status***	`uint8`	0 == OK 1 == NOT_SUPPORTED 2 == ERROR
Description:	SetUsed to enable/disable the transmission of the ECU in the header.		

⌋()

[Dlt210] ⌈This message modifies DltHeaderUseEcuId. ⌋()

[Dlt506] ⌈

Service name:	GetUseECUID		
Service ID [hex]	`0x1B`		
:			
Sync/Async:	Synchronous		
Reentrancy:	Non Reentrant		
Request Parameter			
Number	***Name***	**Type**	**Description**
none			
Response Parameter			

Number	Name	Type	Description
1	Status	uint8	0 == OK 1 == NOT_SUPPORTED 2 == ERROR
2	ecuid_status	uint8	0 – OFF 1 – ON
Description:	Used to get status of DltHeaderUseEcuId		

⌋()

7.7.7.1.20 Use Session ID

[Dlt211] ⌈

Service name:	SetUseSessionID		
Service ID [hex]	0x0E		
:			
Sync/Async:	Synchronous		
Reentrancy:	Non Reentrant		
Request Parameter			
Number	Name	Type	Description
1	new_status	uint8	0 – OFF 1 – ON
Response Parameter			
Number	Name	Type	Description
1	Status	uint8	0 == OK 1 == NOT_SUPPORTED 2 == ERROR
Description:	Used to enable/disable the transmission of the Session ID in the header.		

⌋()

[Dlt212] ⌈This message modifies DltHeaderUseSessionID. ⌋()

[Dlt507] ⌈

Service name:	GetUseSessionID		
Service ID [hex]	0x1C		
:			
Sync/Async:	Synchronous		
Reentrancy:	Non Reentrant		
Request Parameter			
Number	Name	Type	Description
none			
Response Parameter			
Number	Name	Type	Description
1	Status	uint8	0 == OK 1 == NOT_SUPPORTED 2 == ERROR
2	sid_status	uint8	0 – OFF 1 – ON

Description:	Used to get the status of DltHeaderUseSessionID.

⌋()

7.7.7.1.21 Use Timestamp

[Dlt213] ⌈

Service name:	UseTimestamp		
Service ID [hex]:	`0x0F`		
Sync/Async:	Synchronous		
Reentrancy:	Non Reentrant		
Request Parameter			
Number	***Name***	**Type**	**Description**
1	***new_status***	`uint8`	0 – OFF 1 – ON
Response Parameter			
Number	***Name***	**Type**	**Description**
1	***Status***	`uint8`	0 == OK 1 == NOT_SUPPORTED 2 == ERROR
Description:	Used to enable/disable the transmission of the Timestamp in the header.		

⌋()

[Dlt214] ⌈This message modifies DltHeaderUseTimestamp. ⌋()

[Dlt508] ⌈

Service name:	GetUseTimestamp		
Service ID [hex]:	`0x1D`		
Sync/Async:	Synchronous		
Reentrancy:	Non Reentrant		
Request Parameter			
Number	***Name***	**Type**	**Description**
none			
Response Parameter			
Number	***Name***	**Type**	**Description**
1	***Status***	`uint8`	0 == OK 1 == NOT_SUPPORTED 2 == ERROR
2	***tst_status***	`uint8`	0 – OFF 1 – ON
Description:	Used to get the DltHeaderUseTimestamp.		

⌋()

7.7.7.1.22 Use Extended Header

[Dlt215] ⌈

Service name:	UseExtendedHeader		
Service ID [hex]	`0x10`		
:			
Sync/Async:	Synchronous		
Reentrancy:	Non Reentrant		
Request Parameter			
Number	***Name***	**Type**	**Description**
1	***new_status***	`uint8`	0 – OFF 1 – ON
Response Parameter			
Number	***Name***	**Type**	**Description**
1	***Status***	`uint8`	0 == OK 1 == NOT_SUPPORTED 2 == ERROR
Description:	Used to enable/disable the transmission of the extended header. If DltImplementExtendedHeader is not set NOT_SUPPORTED shall be the response.		

⌋()

[Dlt216] ⌈This message modifies DltHeaderUseExtendedHeader. ⌋()

[Dlt509] ⌈

Service name:	UseExtendedHeader		
Service ID [hex]	`0x1E`		
:			
Sync/Async:	Synchronous		
Reentrancy:	Non Reentrant		
Request Parameter			
Number	***Name***	**Type**	**Description**
none			
Response Parameter			
Number	***Name***	**Type**	**Description**
1	***Status***	`uint8`	0 == OK 1 == NOT_SUPPORTED 2 == ERROR
2	***exh_status***	`uint8`	0 – OFF 1 – ON
Description:	Used get the status of DltHeaderUseExtendedHeader		

⌋()

7.7.7.1.23 Call SW-C Injection

[Dlt217] ⌈If the configuration parameter DltImplementSWCInjection is enabled Dlt module shall forward CallSW-CInjection messages to the according SW-C.
The Service_ID 0xFFF to 0xFFFFFFFF are reserved for this purpose. The value is user defined and can be freely used by a SW-C. ⌋()

[Dlt218] ⌈In the case of a CallSW-CInjection message, the Application ID (APID), Context ID (CTID) and the Session ID (SEID) shall be filled in the header. The pair of APID and CTID together with the SEID (see Session ID in 7.6.4) identifies a unique client server interface of a SW-C/runnable which is called in respect to reception of this message with the provided data (see Dlt_InjectCall). ⌋ ()

[Dlt219] ⌈If a unique identification is not possible (this pair does not exist, is not registered yet) the response shall be NOT_SUPPORTED. ⌋ ()

[Dlt220] ⌈

Service name:	CallSW-CInjection		
Service ID [hex]	`0xFFF ... 0xFFFFFFFF`		
:			
Sync/Async:	Synchronous		
Reentrancy:	Non Reentrant		
Request Parameter			
Number	***Name***	**Type**	**Description**
1	***data_length***	`uint32`	length of the provided data
2	***data[]***	`uint8[]`	data to provide to the SW-C
Response Parameter			
Number	***Name***	**Type**	**Description**
1	***Status***	`uint8`	0 == OK 1 == NOT_SUPPORTED 2 == ERROR 3 == PENDING
Description:	Used to call a function in a SW-C. If DltImplementSWCInjection is not set NOT_SUPPORTED shall be the response.		

⌋ ()

7.7.7.1.24 Get ECU Software Version

[Dlt393] ⌈

Service name:	GetSoftwareVersion		
Service ID [hex]	`0x13`		
:			
Sync/Async:	Synchronous		
Reentrancy:	Non Reentrant		
Request Parameter			
Number	***Name***	**Type**	**Description**
Response Parameter			
Number	***Name***	**Type**	**Description**
1	***Status***	`uint8`	0 == OK 1 == NOT_SUPPORTED 2 == ERROR
2	***length***	`uint32`	length of the string sw_version
3	***sw_version***	`char[]`	String containing the ECU – Software Version

Description:	This messages is for getting the SW-Version Number of the ECUs software. This shall be a string containing some numbers, dots, slashes or lines for identifying uniquely a software version number. The string is freely usable and mostly depends on the build system. In Non Verbose Mode his string shall be used to associate and identify a correct description file to the transmitted data. Because Message IDs and its associated arguments can vary on different SW versions a correct mapping of SW-version and description file is very important. In the associated description file this string for SW-version shall also be enclosed.

⌋()

7.7.7.1.25 MessageBufferOverflow

[Dlt487] ⌈

Service name:	MessageBufferOverflow		
Service ID [hex]:	`0x14`		
Sync/Async:	Synchronous		
Reentrancy:	Non Reentrant		
Request Parameter			
Number	***Name***	**Type**	**Description**
Response Parameter			
Number	***Name***	**Type**	**Description**
1	***Status***	`uint8`	0 == OK 1 == NOT_SUPPORTED 2 == ERROR
2	***status***	`uint8`	0 – no Message BufferOverflow 1 – MessageBufferOverflow was happened
Description:	Used to tell that a MessageBufferOverflow happens. This can be requested by a client. Additionally this message is actively send by Dlt at the point when a MessageBufferOVervlow happens.		

⌋()

7.7.7.2 Timing messages

[Dlt221] ⌈The Dlt module shall send periodically time messages. This time messages are used to calculate a relative time on the external client and as alive signal. The period in which the timing messages are sent shall be one second. Timing messages are send by the Dlt module without request of an external client, but only if a connection to an external client is established (e.g. a diagnostic session with ROE or an interface of the Dlt communication module is enabled).⌋(BSW35000028)

[Dlt222] ⌈A timing message contains no data but the standard and the extended header. The SEID, APID and CTID fields can be left blank. All other fields shall be filled with its standard values, especially the Timestamp field. ⌋()

7.7.8 Connection management

To know the SW-Version of the ECU and to associate the correct description file to the received data an external client shall request the SW-Version from the Dlt module. Additionally the Dlt module than knows that a new external client has connected and can empty the message buffer.

[Dlt394] ⌈Each time a connection is established to a Dlt module the control message "Get ECU Software Version" shall be send from the external client to the Dlt module.

A connection is established if an external client is ready to receive data. This can be the opening of a TCP/IP connection or the starting on listening on a serial interface on the external client. ⌋ ()

[Dlt395] ⌈If the Dlt module receives a "Get ECU Software Version" control message, it shall first of all send the response to the "Get ECU SW Version" request.
This should be done for storing the information about the running software of the ECU in the file on the external client side as first information (first message in file). ⌋ ()

[Dlt492] ⌈After the sending of the response to "ECU Software Version" the Dlt module shall empty its messages buffers by sending the containing messages over the network. ⌋ ()

[Dlt493] ⌈If the message buffer size (DltMessageBufferSize) is zero (0 byte) no message buffer shall be used. Instead, every time the messages shall be directly written to the interface, which is configured.

The disabling of the usage of message buffering can be done when a connection less interface like a serial interface is used and the external client is permanently listening. ⌋ ()

7.8 Debugging

[Dlt440] ⌈Each variable that shall be accessible by AUTOSAR Debugging, shall be defined as global variable. ⌋ ()

[Dlt441] ⌈All type definitions of variables which shall be debugged, shall be accessible by the header file. ⌋ ()

[Dlt442] ⌈The declaration of variables in the header file shall be such, that it is possible to calculate the size of the variables by C-"sizeof".⌋ ()

[Dlt443] ⌈Variables available for debugging shall be described in the respective Basic Software Module Description.⌋ ()

7.9 Error classification

[Dlt447] ⌈Development error values are of type uint8.

Type or error	*Relevance*	*Related error code*	*Value [hex]*
API service called with wrong parameter	Development	`DLT_E_WRONG_PARAMETERS`	`0x01`
Provided API services of other modules returned with an error.	Development	`DLT_E_ERROR_IN_PROV_SERVICE`	`0x02`
The Dlt communication module detects an error in communication with its external interfaces	Development	`DLT_E_COM_FAILURE`	`0x03`
To many contexts are registered with the Dlt module. (e.g. the configuration tables are full)	Development	`DLT_E_ERROR_TO_MANY_CONTEXT`	`0x04`
The internal message buffer is full and the oldest messages are overwritten	Development	`DLT_E_MSG_LOOSE`	`0x05`
API service called with a NULL pointer. In case of this error, the API service shall return immediately without any further action, beside reporting this development error.	Development	`DLT_E_PARAM_POINTER`	`0x06`

⌋ (BSW00337, BSW00385, BSW00327)

7.10 Error detection

[Dlt444] ⌈The detection of development errors is configurable (*ON* / *OFF*) at pre-compile time.
The switch *`DLT_DEV_ERROR_DETECT`* (see chapter 10) shall activate or deactivate the detection of all development errors.⌋ (BSW00338)

[Dlt445] ⌈Dlt shall not detect or report any Production errors.⌋ (BSW00338)

7.11 Error notification

[Dlt439] ⌈Detected development errors shall be reported to the *Det_ReportError* service of the Development Error Tracer (Det). ⌋(BSW00338)

7.12 Scheduling strategy

[Dlt468] ⌈The Dlt Module works completely event driven. The callback routines (the provide API for other modules and SW-C) generating this events. ⌋(BSW172)

7.13 Version Checking

[Dlt500] ⌈The Dlt module shall perform Inter Module Checks to avoid integration of incompatible files.

The imported included files shall be checked by preprocessing directives.

The following version numbers shall be verified:
- <MODULENAME>_AR_RELEASE_MAJOR_VERSION
- <MODULENAME>_AR_RELEASE_MINOR_VERSION

Where <MODULENAME> is the module abbreviation of the other (external) modules which provide header files included by the Dlt module.

If the values are not identical to the expected values, an error shall be reported. ⌋()

8 API specification

8.1 Overview

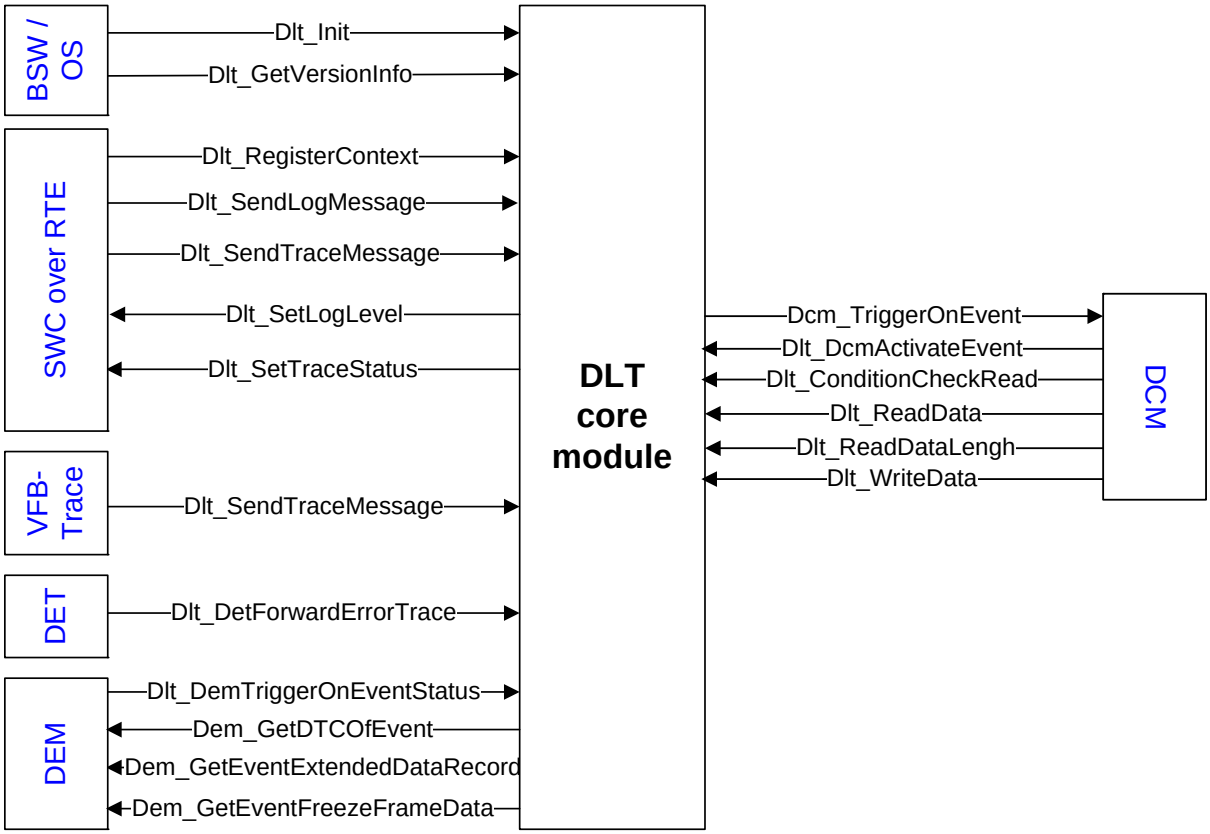

Figure 20 Overview of Dlt communication interfaces

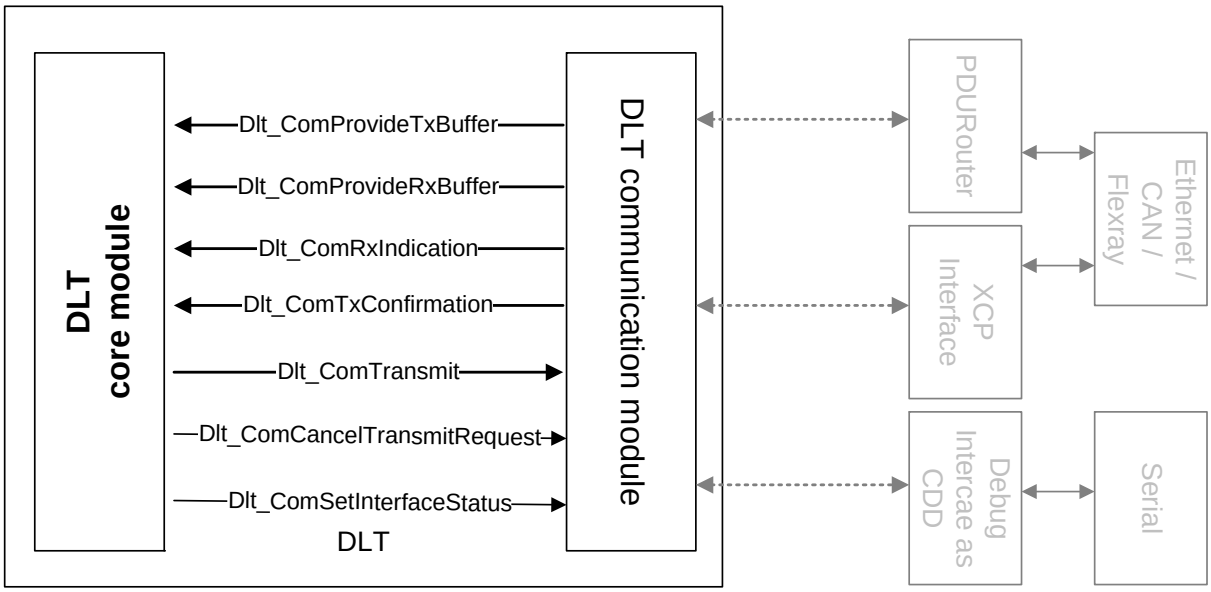

Figure 21 Internal interfaces between Dlt core module and Dlt communication module. The implementation of the Dlt communication module is not scope of this specification. The implementation of Dlt communication module is can be OEM or ECU specific.

8.2 Imported types

In this chapter all types included from the following files are listed:

Module	*Imported Type*
ComStack_Types	BufReq_ReturnType
	NotifResultType
	PduIdType
	PduInfoType
	PduLengthType
Dcm	Dcm_NegativeResponseCodeType
	Dcm_OpStatusType
	Dcm_RoeStateType
Dem	Dem_EventIdType
	Dem_EventStatusExtendedType
Std_Types	Std_ReturnType
	Std_VersionInfoType

In this chapter all types included from the following files are listed. The standard AUTOSAR types are defined in the AUTOSAR Specification of Standard Types document [13].

8.3 Type definitions

8.3.1 Dlt_ConfigType

[Dlt437] ⌈

Name:	`Dlt_ConfigType`	
Type:	`Structure`	
Range:	`implementation specific`	The content of the initialization data structure is implementation specific
Description:	This is the type of the data structure containing the initialization data for Dlt.	

⌋ (BSW00414)

8.3.2 Dlt_MessageTypeType

[Dlt224] ⌈

Name:	`Dlt_MessageTypeType`	
Type:	`Enumeration`	
Range:	`DLT_TYPE_LOG`	0x1: A log message
	`DLT_TYPE_APP_TRACE`	0x2: A trace message
	`DLT_TYPE_NW_TRACE`	0x3: A message forwarded from a communication bus (like CAN, FlexRay)
	`DLT_TYPE_CONTROL`	0x4: A message for internal use/control send between Dlt module and external client.
Description:	This type describes the type of the message.	

⌋ ()

8.3.3 Dlt_SessionIDType

[Dlt225] ⌈

Name:	`Dlt_SessionIDType`	
Type:	`uint`	
Range:	`<range of legal values>`	-- is platform depended, can be set individually (possible values are uint8, uint16 and uint32)
Description:	This type describes the Session ID	

⌋ ()

8.3.4 Dlt_ApplicationIDType

[Dlt226] ⌈

Name:	`Dlt_ApplicationIDType`	
Type:	`uint`	
Range:	`<range of legal values>`	-- is platform depended, can be set individual
Description:	This type describes the Application ID	

⌋ ()

8.3.5 Dlt_ContextIDType

[Dlt227] ⌈

Name:	`Dlt_ContextIDType`		
Type:	`uint`		
Range:	`<range of legal values>`	--	is platform depended, can be set individual
Description:	This type describe the Context ID		

⌋ ()

8.3.6 Dlt_MessageIDType

[Dlt228] ⌈

Name:	`Dlt_MessageIDType`		
Type:	`uint`		
Range:	`<range of legal values>`	--	is platform depended, can be set individual
Description:	contains the unique Message ID for a message		

⌋ ()

8.3.7 Dlt_MessageOptionsType

[Dlt229] ⌈

Name:	`Dlt_MessageOptionsType`		
Type:	`uint8`		
Range:	`verbose_mode`	--	Bit 3: If set Verbose mode is used (yet not relevant)
	`message_type`	--	Bit 0-2 Dlt_MessageTypeType: determines type of msg (log,trace,...)
Description:	Bitfield		

⌋ ()

8.3.8 Dlt_MessageLogLevelType

[Dlt230] ⌈

Name:	`Dlt_MessageLogLevelType`	
Type:	`Enumeration`	
Range:	`DLT_LOG_OFF`	0x00: Turn off logging
	`DLT_LOG_FATAL`	0x01: Fatal system error
	`DLT_LOG_ERROR`	0x02: Errors occurring in a SW-C with impact to correct functionality
	`DLT_LOG_WARN`	0x03 : Log messages where a incorrect behavior can not be ensured
	`DLT_LOG_INFO`	0x04 : Log messages providing information for better understanding of the internal behavior of a software
	`DLT_LOG_DEBUG`	0x05 : Log messages, which are usable only for debugging of a software
	`DLT_LOG_VERBOSE`	0x06 : Log messages with the highest communicative level, here all possible states, information and everything else can be logged
Description:	This type describes the log level for each log message.	

⌋ ()

8.3.9 Dlt_MessageTraceType

[Dlt231] ⌈

Name:	`Dlt_MessageTraceType`	
Type:	`Enumeration`	
Range:	`DLT_TRACE_VARIABLE`	0x01: For tracing the value of a variable
	`DLT_TRACE_FUNCTION_IN`	0x02: For tracing the calling of a function
	`DLT_TRACE_FUNCTION_OUT`	0x03: For tracing the returning of a function
	`DLT_TRACE_STATE`	0x04: For tracing a state of a state machine
	`DLT_TRACE_VFB`	0x05: For tracing RTE Events
Description:	This type describes labels for trace messages.	

⌋ ()

8.3.10 Dlt_MessageControlInfoType

[Dlt232] ⌈

Name:	`Dlt_MessageControlInfoType`	
Type:	`Enumeration`	
Range:	`DLT_CONTROL_REQUEST`	0x01 : Declares a request of an operation on Dlt module
	`DLT_CONTROL_RESPONSE`	0x02 : Declares a the answer of an request
	`DLT_CONTROL_TIME`	0x03 : Declares a timing message
Description:	This type describes the type of a Dlt control message.	

⌋ ()

8.3.11 Dlt_MessageNetworkTraceInfoType

[Dlt233] ⌈

Name:	`Dlt_MessageNetworkTraceInfoType`	
Type:	`Enumeration`	
Range:	`DLT_NW_TRACE_IPC`	0x01 : Inter process communication
	`DLT_NW_TRACE_CAN`	0x02 : CAN communication
	`DLT_NW_TRACE_FLEXRAY`	0x03 : Flexray communication
Description:	This type describes transported type of a Dlt BUSMESSAGE.	

⌋ ()

8.3.12 Dlt_ MessageArgumentCount

[Dlt235] ⌈

Name:	`Dlt_MessageArgumentCount`
Type:	`uint16`
Description:	This type describe count of arguments provided to a message (only used if DltImplementVerboseMode is set)

⌋ ()

8.3.13 Dlt_MessageLogInfoType

[Dlt236] ⌈

Name:	Dlt_MessageLogInfoType		
Type:	Structure		
Element:	Dlt_MessageArgumentCount	arg_count	only used if DltImplementVerboseMode is set
	Dlt_MessageLogLevelType	log_level	--
	Dlt_MessageOptionsType	options	--
	Dlt_ContextIDType	context_id	--
	Dlt_ApplicationIDType	app_id	--
Description:	--		

⌋ ()

8.3.14 Dlt_MessageTraceInfoType

[Dlt237] ⌈

Name:	Dlt_MessageTraceInfoType		
Type:	Structure		
Element:	Dlt_MessageTraceType	trace_info	--
	Dlt_MessageOptionsType	options	--
	Dlt_ContextIDType	context	--
	Dlt_ApplicationIDType	app_id	--
Description:	--		

⌋ ()

8.3.15 Dlt_ReturnType

[Dlt238] ⌈

Name:	Dlt_ReturnType	
Type:	Enumeration	
Range:	E_OK	No error
	DLT_E_INT_BUFFER_FULL	It is not possible to trace the message since the internal Dlt buffer is full.
	DLT_E_MSG_TOO_LARGE	The message is too big for the internal Dlt buffer.
	DLT_E_CONTEXT_ALREADY_REG	The software module context has already registered.
	DLT_E_UNKNOWN_SESSION_ID	Unknown session id.
	DLT_E_IF_NOT_AVAILABLE	The interface is not available.
	DLT_E_IF_BUSY	The interface is busy
	DLT_E_ERROR_UNKNOWN	An unknown error is occurred
Description:	--	

⌋ (BSW00377)

8.4 Function definitions

This is a list of functions provided for upper layer modules.

8.4.1 General provided Functions for BSW-modules

8.4.1.1 Dlt_Init

[Dlt239] ⌈

Service name:	Dlt_Init	

Syntax:	`void Dlt_Init(`
	`  const Dlt_ConfigType* config`
	`)`	

Service ID[hex]:	0x01	
Sync/Async:	Synchronous	
Reentrancy:	Non Reentrant	
Parameters (in):	config	Pointer to a DLT configuration structure
Parameters (inout):	None	
Parameters (out):	None	
Return value:	None	
Description:	Dlt is using the NVRamManager and is to be initialized very late in the ECU startup phase. The Dlt_Init() function should be called after the NVRamManager is initialed."	

⌋ (BSW00344, BSW00404, BSW00405, BSW101, BSW00407, BSW00358, BSW00414)

8.4.1.2 Dlt_GetVersionInfo

[Dlt271] ⌈

Service name:	Dlt_GetVersionInfo	

Syntax:	`void Dlt_GetVersionInfo(`
	`  Std_VersionInfoType* versioninfo`
	`)`	

Service ID[hex]:	0x02	
Sync/Async:	Synchronous	
Reentrancy:	Reentrant	
Parameters (in):	None	
Parameters (inout):	None	
Parameters (out):	versioninfo	Pointer to where to store the version information of this module.
Return value:	None	
Description:	Returns the version information of this module.	

⌋ (BSW00402)

8.4.2 Provided functions for sending log messages from SW-Cs

8.4.2.1 Dlt_SendLogMessage

[Dlt241] ⌈

Service name:	Dlt_SendLogMessage
Syntax:	`Dlt_ReturnType Dlt_SendLogMessage(` `  Dlt_SessionIDType session_id,`

	`const Dlt_MessageLogInfoType* log_info,`
	`const uint8* log_data,`
	`uint16 log_data_length`
	)	

Service ID[hex]:	0x03	
Sync/Async:	Synchronous	
Reentrancy:	Reentrant	
Parameters (in):	session_id	For SW-C this is not visible (Port defined argument value), for BSW-modules it is the module number
	log_info	Structure containing the relevant information for filtering the message.
	log_data	Buffer containing the parameters to be logged. The contents of this pointer represents the payload of the send log message
	log_data_length	Length of the data buffer log_data.
Parameters (inout):	None	
Parameters (out):	None	
Return value:	Dlt_ReturnType	DLT_E_MSG_TOO_LARGE - The message is to large for sending over the network DLT_E_BUFFER_ERROR - Buffer for new Messages is full. E_OK - The required operation succeeded.
Description:	The service represents the interface to be used by basic software modules or by software component to send log messages.	

⌋(BSW35000003)

[Dlt242] ⌈The payload (log_data) shall contain the complete payload of the Dlt log message (compare chapter 7.7.5). This means that the structure and the contents of the provided memory in log_data shall completely compliant to the Dlt protocol payload specification. ⌋()

8.4.2.2 Dlt_SendTraceMessage

[Dlt243] ⌈

Service name:	Dlt_SendTraceMessage	

Syntax:	`Dlt_ReturnType Dlt_SendTraceMessage(`
	`Dlt_SessionIDType session_id,`
	`const Dlt_MessageTraceInfoType* trace_info,`
	`const uint8* trace_data,`
	`uint16 trace_data_length`
	)	

Service ID[hex]:	0x04	
Sync/Async:	Synchronous	
Reentrancy:	Reentrant	
Parameters (in):	session_id	--
	trace_info	Structure containing the relevant information for filtering the message.
	trace_data	Buffer containing the parameters to be traced. The contents of this pointer represents the payload of the send log message
	trace_data_length	Length of the data buffer trace_data
Parameters (inout):	None	
Parameters (out):	None	
Return value:	Dlt_ReturnType	DLT_E_MSG_TOO_LARGE - The message is to large for sending over the network

		DLT_E_BUFFER_ERROR - Buffer for new Messages is full. E_OK - The required operation succeeded.
Description:	The service represents the interface to be used by basic software modules or by software component to trace parameters.	

⌋(BSW35000003)

[Dlt244] ⌈The payload (trace_data) shall contain the complete payload of the Dlt log message (compare chapter 7.7.5). This means that the structure and the contents of the provided memory in trace_data shall completely compliant to the Dlt protocol payload specification.⌋()

8.4.2.3 Dlt_RegisterContext

[Dlt245] ⌈

Service name:	Dlt_RegisterContext	

Syntax:	`Dlt_ReturnType Dlt_RegisterContext(`
	`  Dlt_SessionIDType session_id,`
	`  Dlt_ApplicationIDType app_id,`
	`  Dlt_ContextIDType context_id,`
	`  const uint8* app_description,`
	`  uint8 len_app_description,`
	`  const uint8* context_description,`
	`  uint8 len_context_description`
	)	

Service ID[hex]:	0x05	
Sync/Async:	Synchronous	
Reentrancy:	Reentrant	
Parameters (in):	session_id	number of the module (Module ID within BSW, Port defined argument value within SW-C)
	app_id	the Application ID
	context_id	the Context ID
	app_description	Points to description string for the provided application id. At maximum 255 characters are interpreted.
	len_app_description	The length of the description for the application id string (number of characters of description string).
	context_description	Points to description string for the provided context. At maximum 255 characters are interpreted.
	len_context_description	The length of the description string (number of characters of description string).
Parameters (inout):	None	
Parameters (out):	None	
Return value:	Dlt_ReturnType	DLT_E_CONTEXT_ALREADY_REG - The software module context has already registered. E_OK - The required operation succeed.
Description:	The service has to be called when a software module wants to use services offered by DLT software component for a specific context. If a context id is being registered for an already registered application id then app_description can be NULL and len_app_description zero.	

⌋(BSW35000033)

8.4.2.4 Provided functions for triggering DTC changes from Dem

8.4.2.5 Dlt_DemTriggerOnEventStatus

[Dlt470] ⌈

Service name:	Dlt_DemTriggerOnEventStatus	

Syntax:	`void Dlt_DemTriggerOnEventStatus(`
	`  Dem_EventIdType EventId,`
	`  Dem_EventStatusExtendedType EventStatusOld,`
	`  Dem_EventStatusExtendedType EventStatusNew`
	`)`	

Service ID[hex]:	0x15	
Sync/Async:	Synchronous	
Reentrancy:	Reentrant	
Parameters (in):	EventId	Identification of an Event by assigned event number. The Event Number is configured in the Dem. Min.: 1 (0: Indication of no Event or Failure) Max.: Result of configuration of Event Numbers in Dem (Max is either 255 or 65535)
	EventStatusOld	Extended event status before change
	EventStatusNew	Detected / reported of event status
Parameters (inout):	None	
Parameters (out):	None	
Return value:	None	
Description:	This service is provided by the Dem in order to call Dlt upon status changes.	

⌋ (BSW35000007)

8.4.3 Provided function for fan-out capability of Det

8.4.3.1 Dlt_DetForwardErrorTrace

[Dlt432] ⌈

Service name:	Dlt_DetForwardErrorTrace	

Syntax:	`void Dlt_DetForwardErrorTrace(`
	`  uint16 ModuleId,`
	`  uint8 InstanceId,`
	`  uint16 ApiId,`
	`  uint8 ErrorId`
	`)`	

Service ID[hex]:	0x07	
Sync/Async:	Synchronous	
Reentrancy:	Non Reentrant	
Parameters (in):	ModuleId	Module ID of calling module.
	InstanceId	The identifier of the index based instance of a module, starting from 0, If the module is a single instance module it shall pass 0 as the InstanceId.
	ApiId	ID of API service in which error is detected (defined in SWS of calling module)
	ErrorId	ID of detected development error (defined in SWS of calling module).
Parameters	None	

(inout):	
Parameters (out):	None
Return value:	None
Description:	Service to forward error reports from Det to Dlt.

⌋ (BSW35000006)

8.4.4 Provided interfaces for Dcm

8.4.4.1 Dlt_ActivateEvent

[Dlt488] ⌈

Service name:	Dlt_ActivateEvent	

Syntax:	`Std_ReturnType Dlt_ActivateEvent(`
	`  uint8 RoeEventID,`
	`  Dcm_RoeStateType RoeState`
	`)`	

Service ID[hex]:	0x11	
Sync/Async:	Synchronous	
Reentrancy:	Non Reentrant	
Parameters (in):	RoeEventID	The eventID to use for the ResponseOnEvent (0x86). This eventId shall be used within the Dcm_TriggerOnEvent() function called by Dlt."
	RoeState	--
Parameters (inout):	None	
Parameters (out):	None	
Return value:	Std_ReturnType	E_OK - call succeeded E_NOT_OK - call has some errors
Description:	This function is called by the Dcm if a specific ResponseOnEvent is enabled by a user. The RoeEventID shall be used by the Dlt to notify the Dcm about some actions to do for the ROE service. Normally for the Dlt module, only the ReadDataByIdendifer (0x22) should be used for ROE. In addition, when a specific ROE for the Dlt module is disabled/turned off by a user, the Dlt module is notified with this function.	

⌋ ()

8.4.4.2 Dlt_ReadData

[Dlt247] ⌈

Service name:	Dlt_ReadData	

Syntax:	`Std_ReturnType Dlt_ReadData(`
	`  Dcm_OpStatusType OpStatus,`
	`  uint8* data`
	`)`	

Service ID[hex]:	0x08	
Sync/Async:	Synchronous	
Reentrancy:	Non Reentrant	
Parameters (in):	OpStatus	See description of Dcm_OpStatusType in AUTOSAR_SWS_DCM.
Parameters	None	

(inout):		
Parameters (out):	data	Contains a complete Dlt message
Return value:	Std_ReturnType	E_OK - call succeeded E_PENDING - application process not yet completed, another call is required E_NOT_OK - call has some errors
Description:	Is called from Dcm when UDS service ReadDataByIdendifer for Dlt DID is called.	

⌋ ()

8.4.4.3 Dlt_ReadDataLength

[Dlt248] ⌈

Service name:	Dlt_ReadDataLength	

Syntax:	`Std_ReturnType Dlt_ReadDataLength(`
	`  uint16* DataLength`
	`)`	

Service ID[hex]:	0x09	
Sync/Async:	Synchronous	
Reentrancy:	Non Reentrant	
Parameters (in):	None	
Parameters (inout):	None	
Parameters (out):	DataLength	Data length of the DID to read by Dcm (This is the Dlt message length since only Dlt message are transmitted)
Return value:	Std_ReturnType	E_OK - call succeeded E_NOT_OK - call has some errors
Description:	Is called from Dcm when UDS service ReadDataByIdendifer for Dlt DID is called.	

⌋ ()

8.4.4.4 Dlt_WriteData

[Dlt249] ⌈

Service name:	Dlt_WriteData	

Syntax:	`Std_ReturnType Dlt_WriteData(`
	`  uint8* data,`
	`  uint16 dataLength,`
	`  Dcm_OpStatusType OpStatus,`
	`  Dcm_NegativeResponseCodeType* ErrorCode`
	`)`	

Service ID[hex]:	0x0a	
Sync/Async:	Synchronous	
Reentrancy:	Non Reentrant	
Parameters (in):	data	data to write (Shall contain a complete Dlt message send from a external client by using WriteDataByIdendifer)
	dataLength	length of data to write by Dcm
	OpStatus	See description of Dcm_OpStatusType in AUTOSAR_SWS_DCM.
Parameters (inout):	None	
Parameters (out):	ErrorCode	--
Return value:	Std_ReturnType	E_OK - call succeeded E_PENDING - application process not yet completed, another call

		is required E_NOT_OK - call has some errors
Description:	Is called from Dcm when UDS service WriteDataByIdendifer for Dlt DID is called.	

⌋ ()

8.4.4.5 Dlt_ConditionCheckRead

[Dlt428] ⌈

Service name:	Dlt_ConditionCheckRead	

Syntax:	`Std_ReturnType Dlt_ConditionCheckRead(`
	`  Dcm_OpStatusType OpStatus,`
	`  Dcm_NegativeResponseCodeType* ErrorCode`
	`)`	

Service ID[hex]:	0x0b	
Sync/Async:	Synchronous	
Reentrancy:	Non Reentrant	
Parameters (in):	OpStatus	See description of Dcm_OpStatusType in AUTOSAR_SWS_DCM.
Parameters (inout):	None	
Parameters (out):	ErrorCode	See description in Dcm service component
Return value:	Std_ReturnType	E_OK - call succeeded E_PENDING - application process not yet completed, another call is required E_NOT_OK - call has some errors
Description:	Is called from Dcm when UDS service ReadDataByIdendifer for Dlt DID is called to see if Dlt_ReadData can be called.	

⌋ ()

8.4.5 Interfaces provided by Dlt core module for internal use with Dlt communication module

8.4.5.1 Dlt_ComProvideRxBuffer

[Dlt250] ⌈

Service name:	Dlt_ComProvideRxBuffer	

Syntax:	`BufReq_ReturnType Dlt_ComProvideRxBuffer(`
	`  PduIdType DltRxPduId,`
	`  PduLengthType TpSduLength,`
	`  PduInfoType** PduInfoPtr`
	`)`	

Service ID[hex]:	0x0d	
Sync/Async:	Synchronous	
Reentrancy:	Non Reentrant	
Parameters (in):	DltRxPduId	Identifies the Dlt data to be received. This information is used within Dlt to distinguish two or more receptions at the same time.
Parameters (inout):	TpSduLength	This length identifies the overall number of bytes to be received. The length shall be greater than zero.

Parameters (out):	PduInfoPtr	Pointer to pointer to PduInfoStructure containing data pointer and length of a receive buffer.
Return value:	BufReq_ReturnType	BUFREQ_OK - Buffer request accomplished successful. BUFREQ_E_NOT_OK - Buffer request not successful. Buffer cannot be accessed by TP. BUFREQ_E_BUSY - No buffer is available at the moment. BUFREQ_E_OVFL - Dcm is not capable to receive the number of TpSduLength Bytes.
Description:	By this service the Dlt core module is requested to provide a buffer for a transport layer on first frame or single frame reception. Within this function Dlt shall provide a pointer to a PduInfoStructure that contains a pointer to an SDU buffer and the length of this buffer. This information shall be passed via the output parameter **PduInfoPtr. By this service the receiver (e.g. Dcm) is also informed implicitly about a first frame reception or a single frame reception. If a return value not equal to BUFREQ_E_OK is returned, the values of the out Parameters are not specified and shall not be evaluated.	

⌋ (BSW35000034)

8.4.5.2 Dlt_ComProvideTxBuffer

[Dlt251] ⌈

Service name:	Dlt_ComProvideTxBuffer	

Syntax:	`BufReq_ReturnType Dlt_ComProvideTxBuffer(`
	`  PduIdType DltTxPduId,`
	`  PduInfoType** PduInfoPtr,`
	`  uint16 Length`
	`)`	

Service ID[hex]:	0x0e	
Sync/Async:	Synchronous	
Reentrancy:	Non Reentrant	
Parameters (in):	DltTxPduId	Identifies the Dlt data to be sent. This information is used to derive the PCI information within the transport protocol. The value has to be same as in the according service call Dlt_ComTransmit().
	Length	This is the minimum length given in bytes of the buffer requested from Dlt. The minimum length is needed by the transport protocol to perform error recovery mechanisms. The value of this parameter shall not exceed the number of Bytes still to be sent. A length of zero indicates that the length of the buffer can be of arbitrary size (larger than zero). The Length parameter is expected by Dcm to be always 0 (zero).
Parameters (inout):	None	
Parameters (out):	PduInfoPtr	Pointer to pointer to PduInfoStructure containing data pointer and length of a transmit buffer. This length must not be smaller than the length given by Length.
Return value:	BufReq_ReturnType	BUFREQ_OK - Buffer request accomplished successful. BUFREQ_E_NOT_OK - Buffer request not successful. Buffer cannot be accessed by TP. BUFREQ_E_BUSY - Dlt temporarily cannot provide a buffer of the requested length.
Description:	By this service Dlt is requested to provide a buffer containing data to be	

	transmitted via a transport protocol. The length of the buffer does not need to be in the length of Dlt SDU to be transmitted. It only needs to be as large as required by the caller of that service (Length). If the returned buffer is smaller than the length requested to transmit within the service Dlt_ComTransmit() Dlt will be requested by this service to provide another buffer after the data of the current buffer have been transmitted. If Dlt can provide a buffer of the size Length or larger, this service returns BUFREQ_OK. If Dlt cannot provide a buffer of the size Length, or larger (except Length is equal zero) and the service returns with BUFREQ_E_NOT_OK. If Dlt temporarily cannot provide a buffer of the requested length, the service returns with BUFREQ_E_BUSY. This service has to be called again during next processing of the MainFunction of the transport protocol **Caveats:** After returning a valid buffer, Dlt must not access this buffer unless it is requested to provide a new buffer by this service for the same DltTxPduId or it is notified about the successful transmission (confirmation) or it is notified by an error indicating that the transmission was aborted (error indication). If this service returns BUFREG_E_NOT_OK the transmit requests issued by calling the service Dlt_ComTransmit is still not finished. A final confirmation (indicating an error) is required to finish this service and to start a subsequent request by calling Dlt_ComTransmit. So it is up to the transport protocol if the transmission is aborted on BUFREQ_E_NOT_OK or not.

⎦ (BSW35000034)

8.4.5.3 Dlt_ComRxIndication

[Dlt272] ⎡

Service name:	Dlt_ComRxIndication	

Syntax:	`void Dlt_ComRxIndication(`
	`  PduIdType DltRxPduId,`
	`  NotifResultType Result`
	`)`	

Service ID[hex]:	0x0f	
Sync/Async:	Synchronous	
Reentrancy:	Non Reentrant	
Parameters (in):	DltRxPduId	ID of DLT I-PDU that has been received. Identifies the data that has been received. Range: 0..(maximum number of I-PDU IDs received by DLT) 1
	Result	Result of the N-PDU reception: - NTFRSLT_OK if the complete N-PDU has been received. - NTFRSLT_E_NOT_OK if an error occurred during reception, used to enable unlocking of the receive buffer.
Parameters (inout):	None	
Parameters (out):	None	
Return value:	None	
Description:	This function is called by the Dlt communication module: - with Result = NTFRSLT_OK after the complete Dlt I-PDU has successfully been received, i.e. at the very end of the segmented TP receive cycle or after receiving an unsegmented N-PDU. - with Result = NTFRSLT_E_NOT_OK it is indicated that an error (e.g. timeout) has occurred during the reception of the Dlt I-PDU. This passes the receive buffer back to Dlt and allows error handling. It is undefined which part of the buffer contains valid data in this case, so Dlt shall not evaluate that buffer.	

	By calling this service only Dlt is allowed to access the buffer. **Caveats:** This function might be called in interrupt context. If an existing reception has to be canceled to establish a new reception it is required to indicate a cancellation first before requesting a buffer for the new reception. Otherwise Dlt will be requested to open a second connection.

⎦ (BSW35000034)

8.4.5.4 Dlt_ComTxConfirmation

[Dlt273] ⎡

Service name:	Dlt_ComTxConfirmation	

Syntax:	`void Dlt_ComTxConfirmation(`
	`  PduIdType DltTxPduId,`
	`  NotifResultType Result`
	`)`	

Service ID[hex]:	0x10	
Sync/Async:	Synchronous	
Reentrancy:	Non Reentrant	
Parameters (in):	DltTxPduId	ID of Dlt I-PDU that has been transmitted. Range: 0..(maximum number of I-PDU IDs transmitted by Dcm) - 1
	Result	Result of the N-PDU transmission: - NTFRSLT_OK if the complete N-PDU has been transmitted. - NTFRSLT_E_NOT_OK if an error occurred during transmission, used to enable unlocking of the transmit buffer. - NTFRSLT_E_CANCELATION_OK if the N-PDU has been successfully cancelled - NTFRSLT_E_CANCELATION_NOT_OK if an error occurred when cancelling the N-PDU
Parameters (inout):	None	
Parameters (out):	None	
Return value:	None	
Description:	This function is called by the Dlt communication module: - with Result = NTFRSLT_OK after the complete Dlt I-PDU has successfully been transmitted, i.e. at the very end of the segmented TP transmit cycle. Within this function, Dlt shall unlock the transmit buffer. - with Result = NTFRSLT_E_NOT_OK if an error (e.g. timeout) has occurred during the transmission of the Dlt I-PDU. This enables unlocking of the transmit buffer. The I-PDU can be rejected and an error reporting may be done. Error handling is up to the PduRouter. - with Result = NTFRSLT_E_CANCELATION_OK if the N-PDU has been successfully cancelled after a request with Dlt_ComCancelTransmitRequest() - with Result = NTFRSLT_E_CANCELATION_NOT_OK if an error occurred when cancelling the N-PDU after a request with Dlt_ComCancelTransmitRequest() Caveats: This function might be called in interrupt context (e.g. from a transmit interrupt). However, for transmission via FlexRay there is a restriction: Since the FlexRay Specification does not mandate the existence of a transmit interrupt, the exact meaning of this confirmation (i.e. "transfer into the FlexRay controller's send buffer" OR "transmission onto the FlexRay network") depends on the capabilities of the FlexRay communication controller and the configuration of the FlexRay Interface.	

⌋ (BSW35000034)

8.5 Configurable interfaces

In this chapter all interfaces are listed where the target function could be configured. The target function is usually a call-back function. The names of these kind of interfaces is not fixed because they are configurable.

8.5.1 Expected Interfaces from SW-Cs

8.5.1.1 Dlt_SetLogLevel

[Dlt252] ⌈

Service name:	Dlt_SetLogLevel_<SESSION>	

Syntax:	`void Dlt_SetLogLevel_<SESSION>(`
	`  Dlt_ApplicationIDType app_id,`
	`  Dlt_ContextIDType context_id,`
	`  Dlt_MessageLogLevelType loglevel`
	`)`	

Service ID[hex]:	0x11	
Sync/Async:	Asynchronous	
Reentrancy:	Non Reentrant	
Parameters (in):	app_id	the Application ID
	context_id	the Context ID
	loglevel	the new log level of the context
Parameters (inout):	None	
Parameters (out):	None	
Return value:	None	
Description:	Callback Is called by Dlt to inform the SW-C of a new log level status of a given context.	

⌋ (BSW35000004, BSW35000038)

[Dlt253] ⌈This function shall be provided by a SW-C and is called from Dlt when the trace status for the given pair of Application ID and Context ID changes. ⌋ ()

8.5.1.2 Dlt_SetTraceStatus

[Dlt254] ⌈

Service name:	Dlt_SetTraceStatus_<SESSION>

Syntax:	`void Dlt_SetTraceStatus_<SESSION>(`
	`  Dlt_ApplicationIDType app_id,`
	`  Dlt_ContextIDType context_id,`
	`  boolean new_trace_status`
	`)`

Service ID[hex]:	0x12

Sync/Async:	Asynchronous	
Reentrancy:	Non Reentrant	
Parameters (in):	app_id	the Application ID
	context_id	the Context ID
	new_trace_status	the new trace_status for the pair of Application ID and Context ID
Parameters (inout):	None	
Parameters (out):	None	
Return value:	None	
Description:	Callback Is called by Dlt to inform the SW-C of a new log level status of a given context.	

⌋(BSW35000004, BSW35000038)

[Dlt255] ⌈This function shall be provided by a SW-C and is called from Dlt when the trace status for the given pair of Application ID and Context ID changes. ⌋()

8.5.1.3 Dlt_SetVerboseMode

[Dlt256] ⌈

Service name:	Dlt_SetVerboseMode_<SESSION>	

Syntax:	`void Dlt_SetVerboseMode_<SESSION>(`
	`  Dlt_ApplicationIDType app_id,`
	`  Dlt_ContextIDType context_id,`
	`  boolean is_verbose_mode`
	`)`	

Service ID[hex]:	0x13	
Sync/Async:	Asynchronous	
Reentrancy:	Non Reentrant	
Parameters (in):	app_id	the Application ID
	context_id	the Context ID
	is_verbose_mode	if true, Verbose Mode is enabled, if false Verbose Mode is disabled
Parameters (inout):	None	
Parameters (out):	None	
Return value:	None	
Description:	Callback Is called by Dlt to inform the SW-C of a change of the verbose mode.	

⌋()

[Dlt257] ⌈This interface shall only be called by Dlt if DltImplementVerboseMode is set. ⌋()

[Dlt258] ⌈This function shall be provided by a SW-C and is called from Dlt when the Verbose Mode changes. ⌋()

8.5.1.4 Dlt_InjectCall

[Dlt259] ⌈

Service name:	Dlt_InjectCall_<SESSION>	

Syntax:	`void Dlt_InjectCall_<SESSION>(`
	`  Dlt_ApplicationIDType app_id,`
	`  Dlt_ContextIDType context_id,`
	`  uint32 service_id,`
	`  uint32 data_length,`
	`  const uint8* data`
	`)`	

Service ID[hex]:	0x14	
Sync/Async:	Asynchronous	
Reentrancy:	Non Reentrant	
Parameters (in):	app_id	the Application ID
	context_id	the Context ID
	service_id	the service ID for the injection (user defined)
	data_length	length of the data puffer provided
	data	pointer to data puffer with data belonging to the injection (service ID). The contents of the data is user defined
Parameters (inout):	None	
Parameters (out):	None	
Return value:	None	
Description:	Callback Is called by Dlt to inject a function call in the SW-C. The behaviour trigged by this function should depend on the service_id also the interpretation of the user data. Both are specific to the application.	

⌋()

[Dlt260] ⌈This interface shall only called by Dlt when DltImplementSWCInjection is set. ⌋()

[Dlt261] ⌈This function shall be provided by a SW-C and is called from Dlt when the Verbose Mode changes. ⌋()

8.6 Expected Interfaces

In this chapter all interfaces required from other modules are listed.

8.6.1 Expected Interfaces from Dcm

8.6.1.1 Dcm_TriggerOnEvent

[Dlt262] ⌈

Service name:	Dcm_TriggerOnEvent	
Syntax:	`void Dcm_TriggerOnEvent (uint8 eventID` `)`	
Service ID [hex]:		
Sync/Async:	Synchronous	
Reentrancy:	Non Reentrant	
Parameters (in):	`uint8`	eventID

Parameters (inout):	none
Parameters (out):	none
Return value:	
Description:	Triggers a ROE for ReadDataByIdentifer for the Dlt module at Dcm. Dlt shall call this function if it has some data (log/trace/control messages) to send. The eventID shall be enabled and provided by the call from Dcm to Dlt_DcmActivateEvent.

⌋ ()

8.6.2 Expected Interfaces from Dlt communication module

8.6.2.1 Dlt_ComTransmit

[Dlt263] ⌈

Service name:	DltCom_Transmit	

Syntax:	`Std_ReturnType DltCom_Transmit(`
	`  PduIdType DltTxPduId,`
	`  PduInfoType* PduInfoPtr`
	`)`	

Service ID[hex]:	0x12	
Sync/Async:	Synchronous	
Reentrancy:	Non Reentrant	
Parameters (in):	DltTxPduId	ID of Dlt I-PDU to be transmitted. Range: 0..(maximum number of I-PDU IDs which may be transmitted by Dcm) - 1
	PduInfoPtr	Pointer to a structure with I-PDU related data that shall be transmitted: data length and pointer to I-SDU buffer
Parameters (inout):	None	
Parameters (out):	None	
Return value:	Std_ReturnType	E_OK: Transmit request has been accepted E_NOT_OK: Transmit request has not been accepted
Description:	The Dlt communication module requests a transmission for the Dlt core module.	

⌋ (BSW35000034)

8.6.2.2 Dlt_ComCancelTransmitRequest

[Dlt264] ⌈

Service name:	Dlt_ComCancelTransmitRequest	

Syntax:	`Std_ReturnType Dlt_ComCancelTransmitRequest(`
	`  PduIdType PduId`
	`)`	

Service ID[hex]:	0x13	
Sync/Async:	Synchronous	
Reentrancy:	Non Reentrant	
Parameters (in):	PduId	This parameter contains the unique identifier of the I-PDU which transfer has to be cancelled.
Parameters (inout):	None	
Parameters (out):	None	
Return value:	Std_ReturnType	**E_NOT_OK:** Cancellation request of the transfer of the specified

		I-PDU is rejected, e. g. cancellation is requested at the receiver in an 1:n connection or in an unsegmented transfer at the receiver or cancellation is not allowed for the corresponding **channel.** E_OK: Cancellation request of the transfer (sending or receiving) of the specified I-PDU is accepted.
Description:	This service primitive is used to cancel the transfer of pending I-PDUs. This function has to be called with the PDU-Id and the reason for cancellation.	

⌋ (BSW35000034)

[Dlt485] ⌈The call to this this function should be forwarded to the PDU-Router function PduR_CancelTransmitRequest (see [2]). At this time the reason for cancelling should be provided. ⌋ ()

8.6.2.3 Dlt_ComSetInterfaceStatus

[Dlt265] ⌈

Service name:	DltCom_SetInterfaceStatus	

Syntax:	`Dlt_ReturnType DltCom_SetInterfaceStatus(`
	`  uint8[4] com_interface,`
	`  uint8 new_status`
	`)`	

Service ID[hex]:	0x14	
Sync/Async:	Synchronous	
Reentrancy:	Non Reentrant	
Parameters (in):	com_interface	To interpret as a name for a interface Possible values are "DCM" - Interface to the Dcm (Diagnostic Interface) For the Dlt communication module user defined values are allowed, e.g.: "SER1", "eth0"
	new_status	0 - OFF 1 - ON
Parameters (inout):	None	
Parameters (out):	None	
Return value:	Dlt_ReturnType	E_OK - Succeded DLT_E_IF_BUSY - The interface is busy DLT_E_IF_NOT_AVAILABLE - The interface to change the state is not available
Description:	--	

⌋ (BSW35000034)

8.7 Port Definition for Dlt module

[Dlt495] ⌈

ClientServerInterface DLTServicel{

```
PossibleErrors {
     E_OK = 0,
     E_NOT_OK = 1,
```

```
      };
Dlt_ReturnType Dlt_SendLogMessage (
      IN Dlt_SessionIDType session_id,
      IN Dlt_MessageLogInfoType log_info,
      IN uint8 *log_data,
      IN uint16 log_data_length,
      ERR{E_OK,E_NOT_OK});

Dlt_ReturnType Dlt_SendTraceMessage (
      IN Dlt_SessionIDType session_id,
      IN Dlt_MessageTraceInfoType trace_info,
      IN uint8 * trac_data,
      IN uint16 trace_data_length,
      ERR{E_OK,E_NOT_OK});

Dlt_RetrunType Dlt_RegisterContext (
      IN Dlt_SessionIDType session_id,
      IN Dlt_ApplicationIDType app_id,
      IN Dlt_ContextIDType context_id,
      IN uint8 * description,
      IN uint8 len_description,
      ERR{E_OK,E_NOT_OK});

}
```

⌋()

[Dlt496] ⌈

```
ClientServerInterface LogTraceSessionControl{
PossibleErrors {
      E_OK = 0,
      E_NOT_OK = 1,
      };
      Dlt_SetLogLevel (
            IN Dlt_ApplicationIDType app_id,
            IN Dlt_ContextIDType context_id,
            IN Dlt_MessageLogLevelType loglevel,
            ERR{E_OK,E_NOT_OK});

      Dlt_SetTraceStatus (
            IN Dlt_ApplicationIDType app_id,
            IN Dlt_ContextIDType context_id,
            IN boolean new_trace_status,
            ERR{E_OK,E_NOT_OK});

}
```

⌋()

[Dlt497] ⌈

Only connected by Dlt if DltImplementVerboseMode is set.

```
ClientServerInterface VerboseModeControl{
PossibleErrors {
      E_OK = 0,
      E_NOT_OK = 1,
      };
      Dlt_SetVerboseMode (
            IN Dlt_ApplicationIDType app_id,
```

```
            IN Dlt_ContextIDType context_id,
            IN boolen is_verbose_mode,
            ERR{E_OK,E_NOT_OK});

}
```

⌋()

[Dlt498] ⌈
Only connected by Dlt if DltImplementSWCInjection is set.

```
ClientServerInterface InjectionCallback{
PossibleErrors {
      E_OK = 0,
      E_NOT_OK = 1,
      };
      Dlt_InjectCall (
            IN Dlt_ApplicationIDType app_id,
            IN Dlt_ContextIDType context_id,
            IN uint32 service_id,
            IN uint32 data_length,
            IN uint8 * data,
            ERR{E_OK,E_NOT_OK}
            );
}
```

⌋()

[Dlt499] ⌈

```
Service Dlt
{
      // "nnn" below is number of ports using the service
      RequirePort LogTraceSessionControl PSCN000;
      ...
      RequirePort LogTraceSessionControl PSCNnnn;

      RequirePort InjectionCallback ICN000;
      ...
      RequirePort InjectionCallback ICNnnn;


      RequirePort VerboseModeControl VCN000;
      ...
      RequirePort VerboseModeControl VCNnnn;


      ProvidePort DLTService PS000
      …
      ProvidePort DLTService PSnnn

      InternalBehavior
      {
            RunnableEntity LogMessage
            symbol "Dlt_SendLogMessage "
            canbeInvokedConcurrently = TRUE

            RunnableEntity TraceMessage
            symbol "Dlt_SendTraceMessage "

            PortArgument          {port=PS000,          value.type=uint16,
            value.value=0x1000}
```

```
            PortArgument          {port=PS<nnn>,          value.type=uint16,
            value.value=0x1000 + <nnn>}

      };
};
```

⌋ ()

9 Sequence diagrams

9.1 Dlt initialization

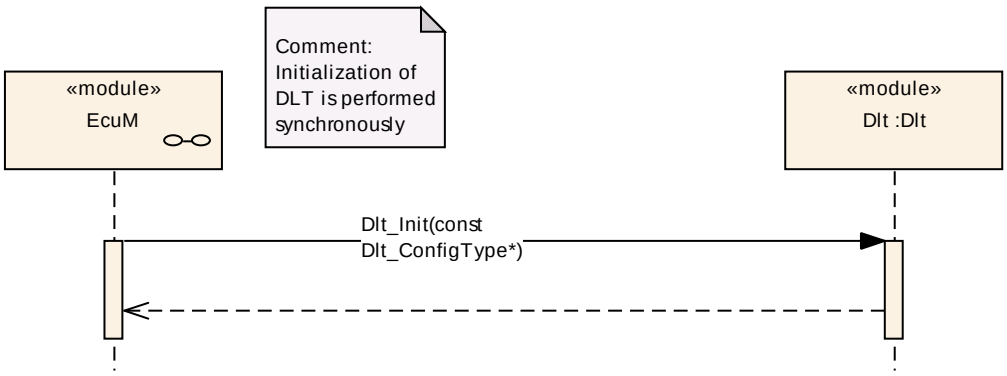

Figure 22: Sequence Dlt initialisation

The Preinit phase of Dlt is followed by the Init phase of Dlt.

9.2 General logging with Dlt

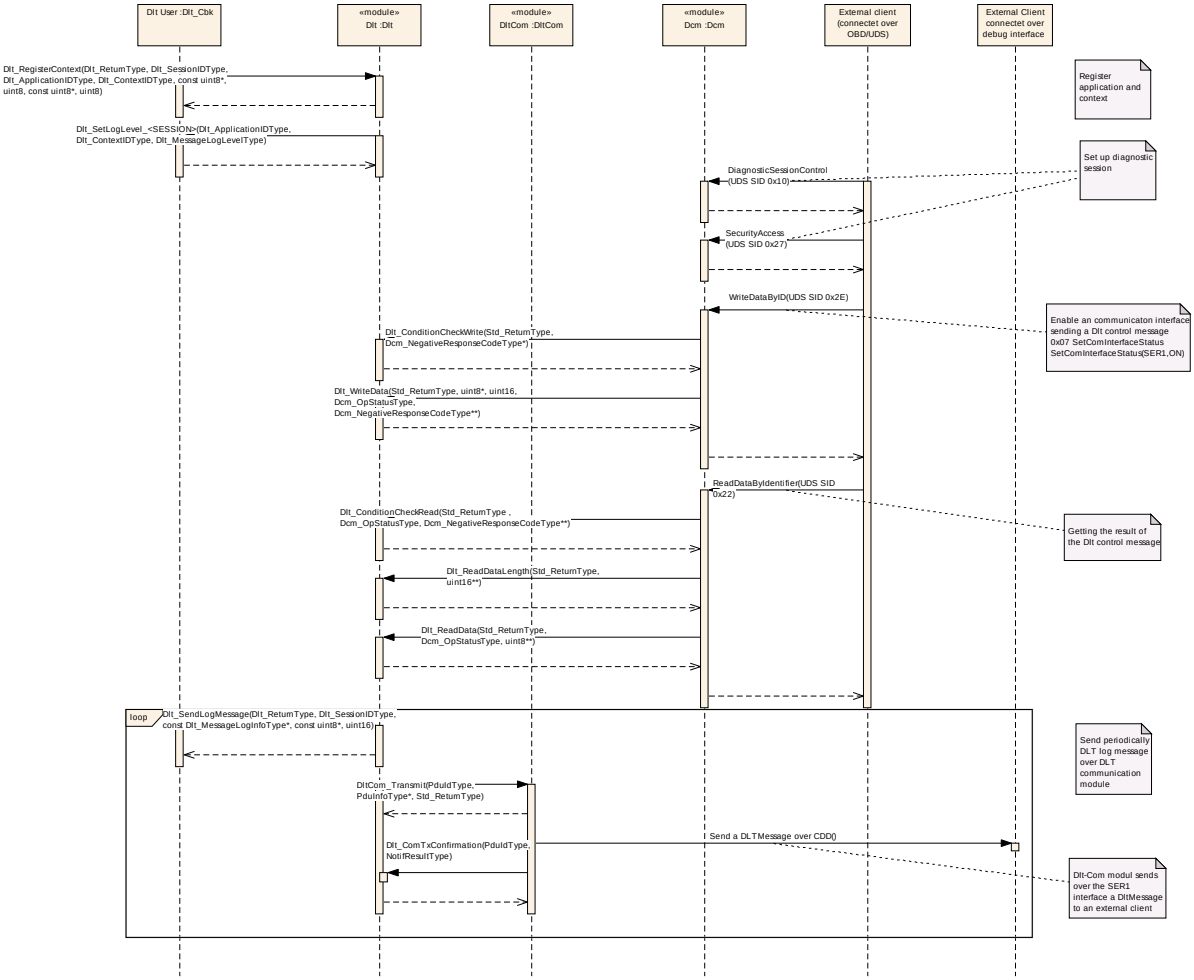

Figure 23: Sequence General logging with Dlt

This sequence chart corresponds to the Use Case described in 7.2.1.

9.3 Logging over UDS by using the Dcm interfaces

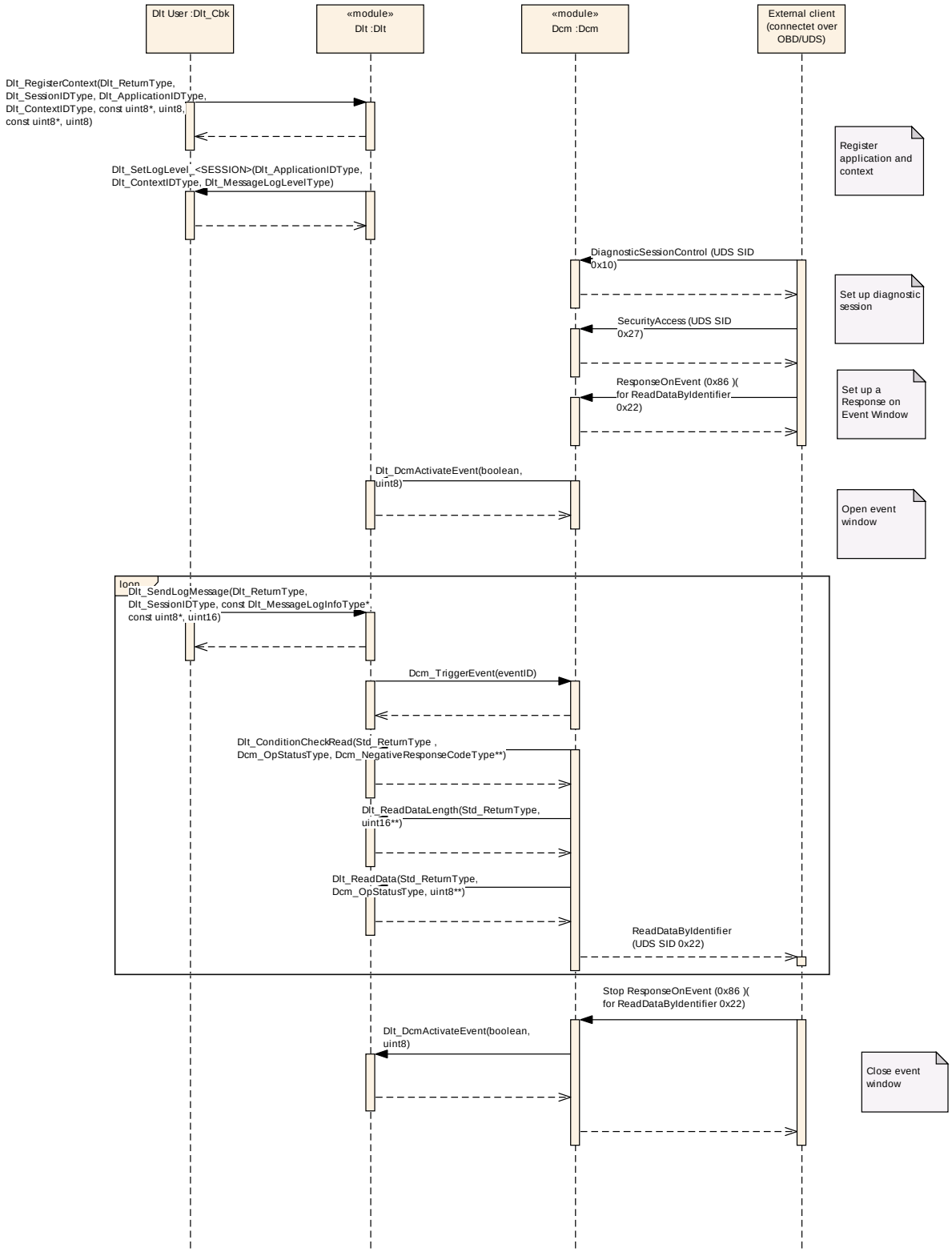

Figure 24: Sequence Logging over UDS with Dlt

This sequence chart corresponds to the Use Case described in 7.2.2.

9.4 Tracing of VFB

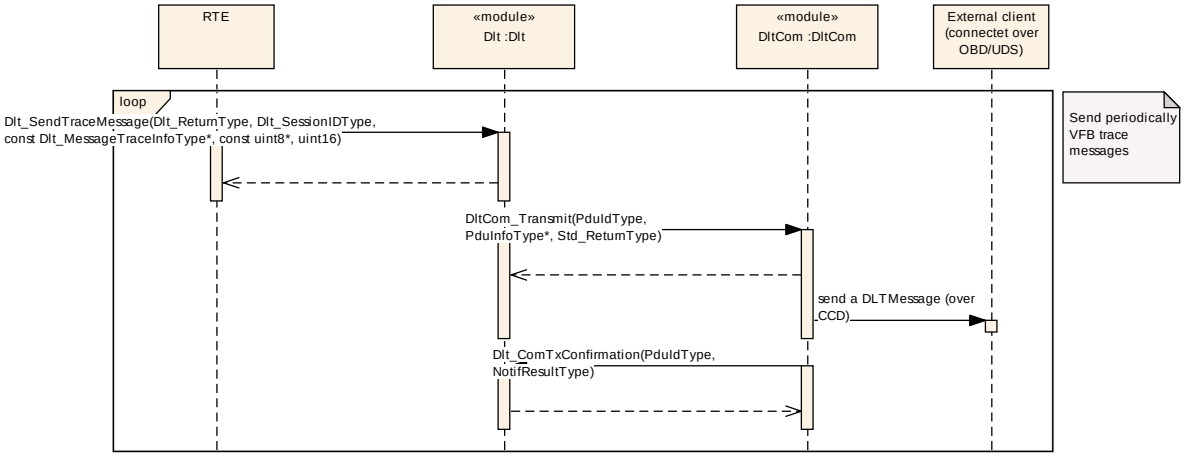

Figure 25: Sequence Tracing of VFB

This sequence chart corresponds to the Use Case described in 7.2.3.

9.5 Runtime configuration of Dlt

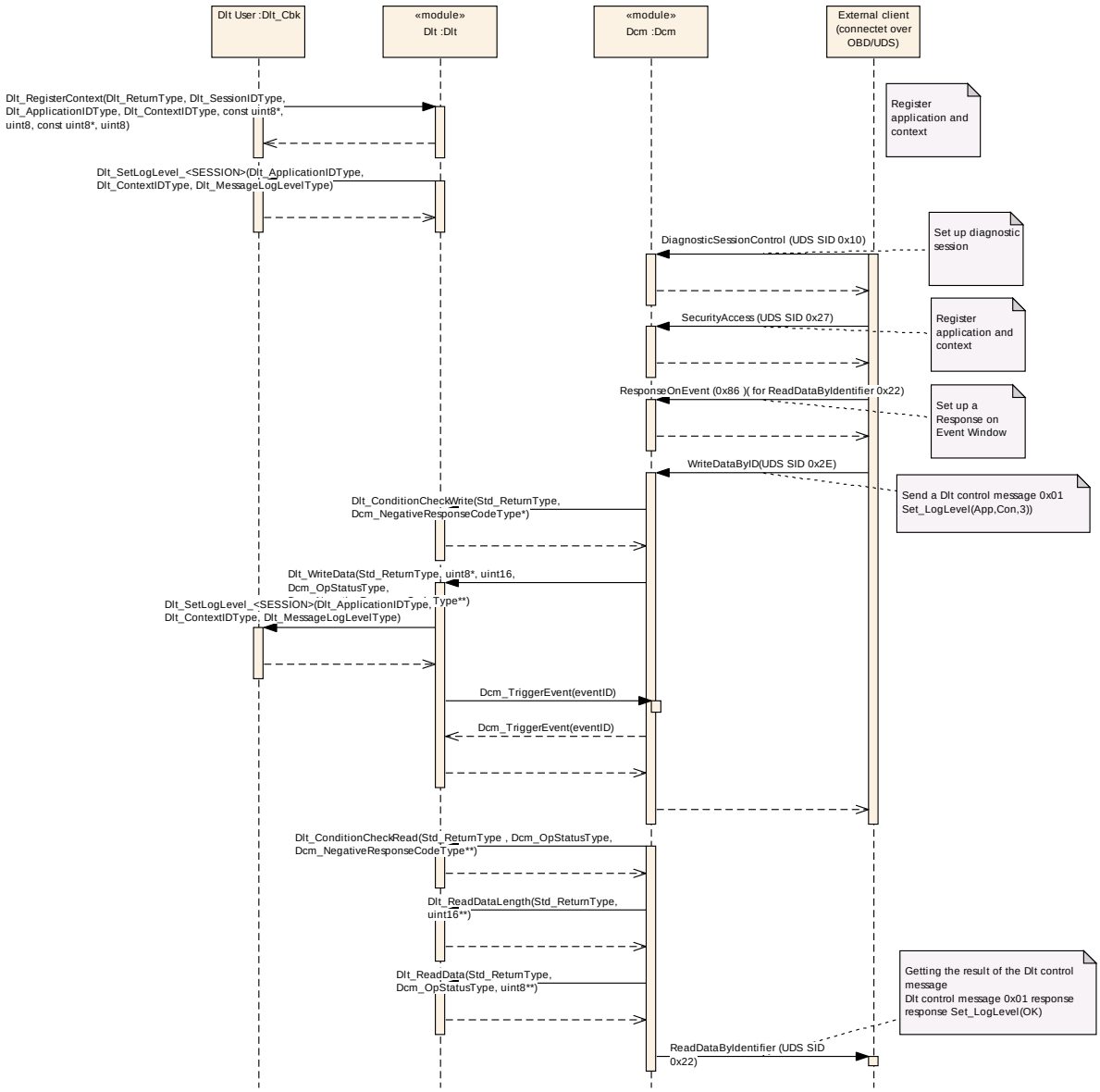

Figure 26: Sequence Runtime configuration of Dlt

This sequence chart corresponds to the Use Case described in 7.2.4.

9.6 Dlt interaction only over Dlt communication module

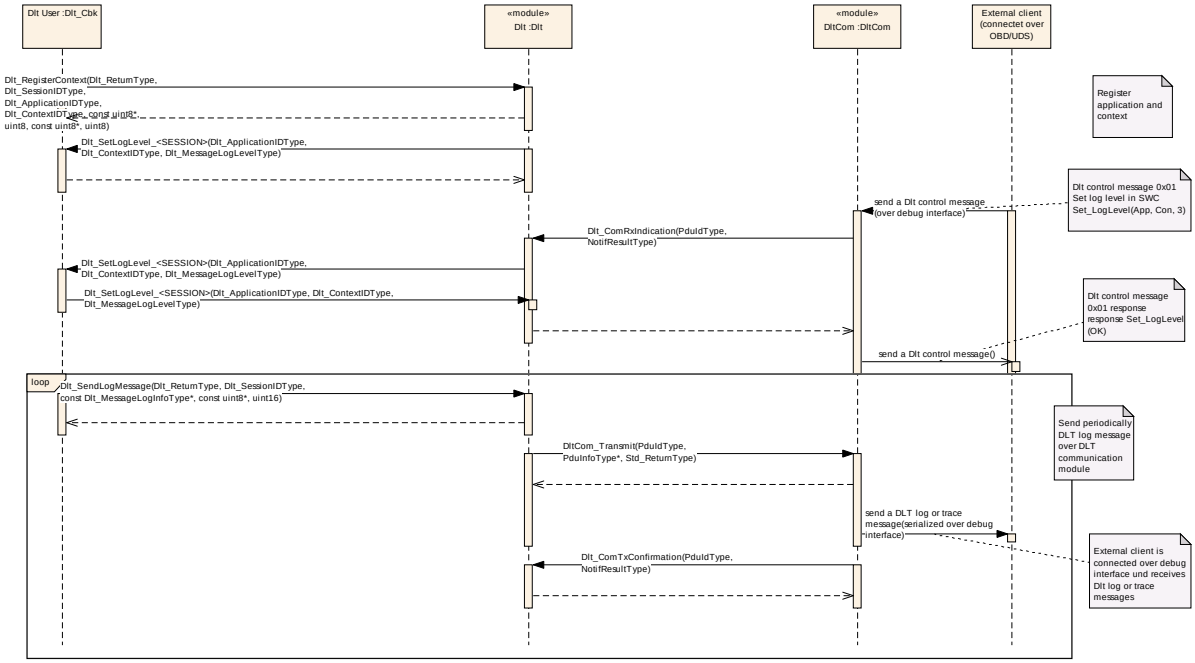

Figure 27: Sequence Dlt interaction only over Dlt communication module

This sequence chart corresponds to the Use Case described in 7.2.5.

9.7 Dlt interaction with Dem

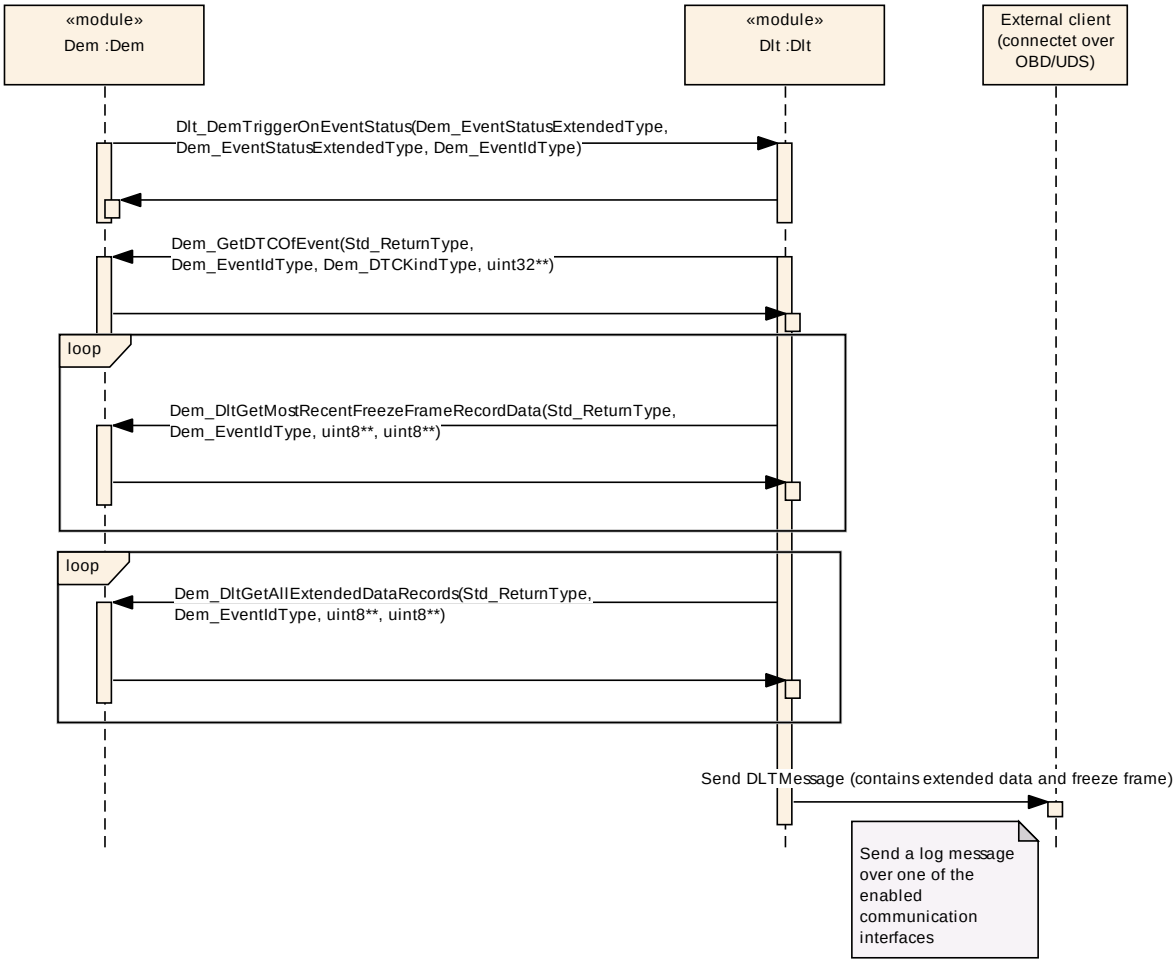

Figure 28 Interaction with Dem

Dlt get a trigger from Dem (Dlt_DemTriggerOnEventStatus) when an event in Dem changes. Than Dlt calls Dem for the DTC, the FreezeFrame and the ExtendedDataRecord of this event. Afterwards the collected information are send to an external client.

10 Configuration specification

In general, this chapter defines configuration parameters and their clustering into containers. In order to support the specification Chapter 10.1 describes fundamentals. It also specifies a template (table) you shall use for the parameter specification. We intend to leave Chapter 10.1 in the specification to guarantee comprehension.

Chapter 10.2 specifies the structure (containers) and the parameters of the module Dlt.

Chapter 10.3 specifies published information of the module <Module Name>.

10.1 How to read this chapter

In addition to this section, it is highly recommended to read the documents:

7. AUTOSAR Layered Software Architecture [3] .
8. AUTOSAR ECU Configuration Specification [4].
9. This document describes the AUTOSAR configuration methodology and the AUTOSAR configuration metamodel in detail.

The following is only a short survey of the topic and it will not replace the ECU Configuration Specification document.

10.1.1 Configuration and configuration parameters

Configuration parameters define the variability of the generic part(s) of an implementation of a module. This means that only generic or configurable module implementation can be adapted to the environment (software/hardware) in use during system and/or ECU configuration.

The configuration of parameters can be achieved at different times during the software process: before compile time, before link time or after build time. In the following, the term “configuration class” (of a parameter) shall be used in order to refer to a specific configuration point in time.

10.1.2 Variants

The Dlt module has the following variants:

[Dlt266] ⌈Variant A: This variant is limited to pre-compile configuration parameters. This variant is mostly for use with NVRam storage. Than some marked configuration parameters are the initial values for the parameter stored in NVRam only.⌋ ()

[Dlt267] ⌈Variant B: This variant is limited to link-time- and pre-compile-time configuration parameters only.

Variant B shall be used when the Dlt implementation is delivered in object code only. ⌋()

[Dlt268] ⌈Variant C: This variant allows a mix of pre-compile-time-, link-time- and postbuild-time- configuration parameters.

In variant C the pre-compile parameter shall be used to enable or disable the functionality. With the post build parameter the functionality shall be configured. This shall be used if no NVRam storage can be used.

Please note: This pre-compile configuration parameters are mandatory for all variants. The pre-compile parameter shall be used to enable or disable Dlt functionality or are Dlt global configuration data that shall be configured at pre complile time (e.g. memory influence). ⌋()

10.1.3 Containers

Containers structure the set of configuration parameters. This means:

- *all* configuration parameters are kept in containers.
- (sub-) containers can reference (sub-) containers. It is possible to assign a multiplicity to these references. The multiplicity then defines the possible number of instances of the contained parameters.

10.1.4 Specification template for configuration parameters

The following tables consist of three sections:

- the general section
- the configuration parameter section
- the section of included/referenced containers

Pre-compile time - specifies whether the configuration parameter shall be of configuration class *Pre-compile time* or not

Label	***Description***
x	The configuration parameter shall be of configuration class *Pre-compile time*.
--	The configuration parameter shall never be of configuration class *Pre-compile time*.

Link time - specifies whether the configuration parameter shall be of configuration class *Link time* or not

Label	***Description***
x	The configuration parameter shall be of configuration class *Link time*.
--	The configuration parameter shall never be of configuration class *Link time*.

Post Build - specifies whether the configuration parameter shall be of configuration class *Post Build* or not

Label	***Description***
x	The configuration parameter shall be of configuration class *Post Build* and no specific implementation is required.
L	*Loadable* - the configuration parameter shall be of configuration class *Post Build* and only one configuration parameter set resides in the ECU.
M	*Multiple* - the configuration parameter shall be of configuration class *Post Build* and is selected out of a set of multiple parameters by passing a dedicated pointer to the init function of the module.
--	The configuration parameter shall never be of configuration class *Post Build*.

10.2 Containers and configuration parameters

The following chapters summarize all configuration parameters. The detailed meanings of the parameters describe Chapters 0 and Chapter 8.

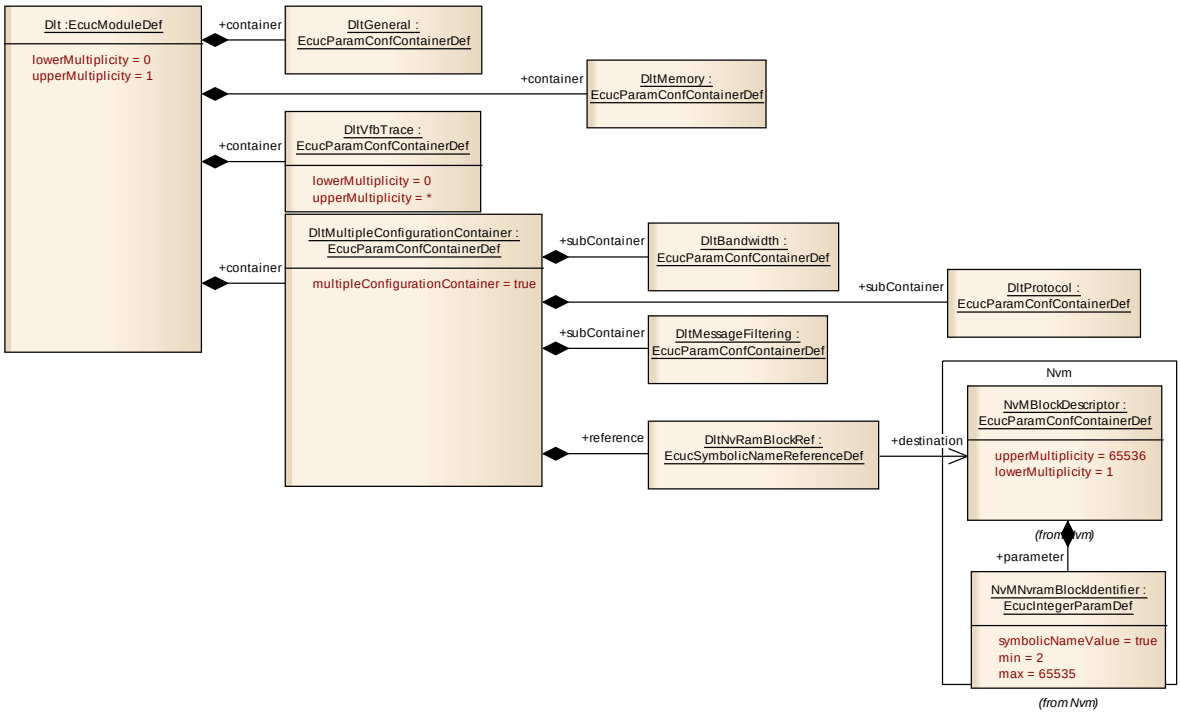

10.2.1 Dlt

SWS Item	**Dlt800_Conf :**
Module Name	*Dlt*
Module Description	--

Included Containers		
Container Name	***Multiplicity***	***Scope / Dependency***
DltGeneral	1	Flags for adding removing functionality from code.
DltMemory	1	Configuration parameters for reserving memory for some internal storing and buffer.
DltMultipleConfigurationContainer	1	Container holding the sub-structure for multiple configuration support.
DltVfbTrace	0..*	All functions to trace from the VFB by the Dlt.

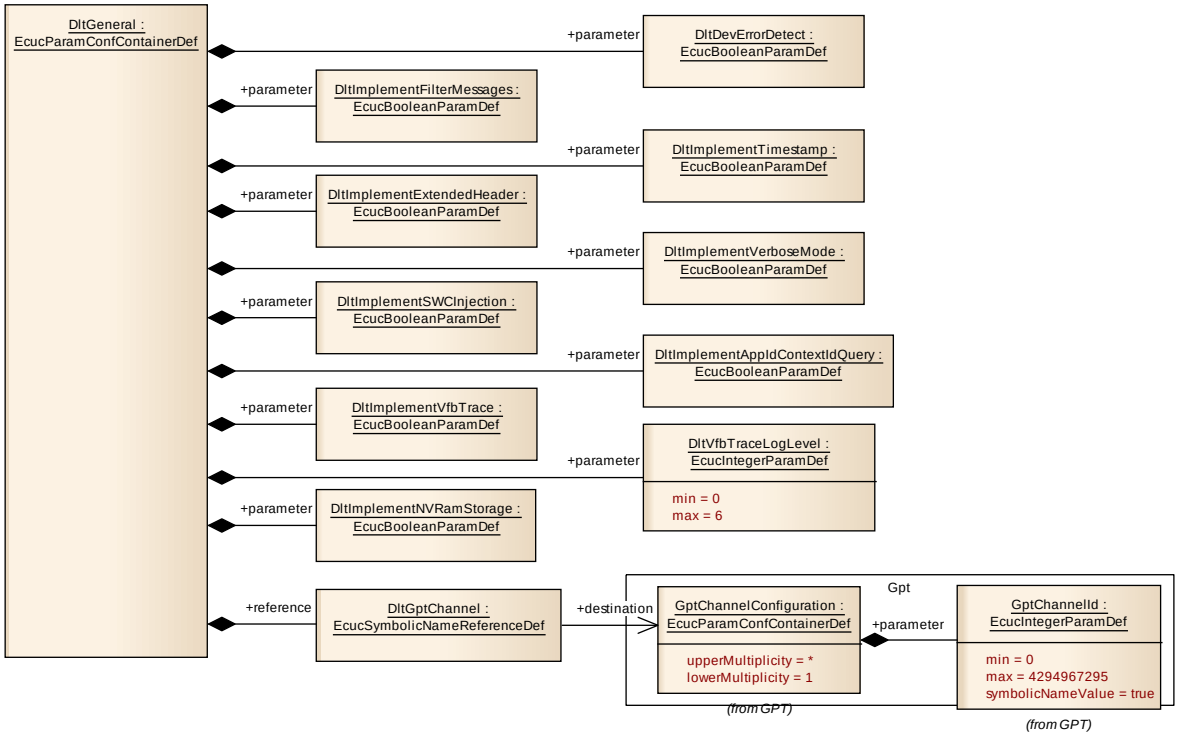

10.2.2 DltGeneral

SWS Item	**Dlt809_Conf :**
Container Name	DltGeneral
Description	Flags for adding removing functionality from code.
Configuration Parameters	

SWS Item	**Dlt840_Conf :**		
Name	DltDevErrorDetect {DLT_DEV_ERROR_DETECT}		
Description	Enables/Disables development error detection.		
Multiplicity	1		
Type	EcucBooleanParamDef		
Default value	--		
ConfigurationClass	***Pre-compile time***	X	All Variants
	Link time	--	
	Post-build time	--	
Scope / Dependency			

SWS Item	**Dlt815_Conf :**		
Name	DltImplementAppIdContextIdQuery		
Description	If set the functionality for Verbose Mode shall be available.		
Multiplicity	1		
Type	EcucBooleanParamDef		
Default value	--		
ConfigurationClass	***Pre-compile time***	X	All Variants
	Link time	--	
	Post-build time	--	
Scope / Dependency			

SWS Item	**Dlt816_Conf :**		
Name	DltImplementExtendedHeader		
Description	If set the extended functionality for the header shall be available.		
Multiplicity	1		
Type	EcucBooleanParamDef		
Default value	--		
ConfigurationClass	***Pre-compile time***	X	All Variants
	Link time	--	
	Post-build time	--	
Scope / Dependency			

SWS Item	**Dlt817_Conf :**		
Name	DltImplementFilterMessages		
Description	This flag is for code generation of Dlt. If set the functionality for filtering messages shall be included in the code.		
Multiplicity	1		
Type	EcucBooleanParamDef		
Default value	--		
ConfigurationClass	***Pre-compile time***	X	All Variants
	Link time	--	
	Post-build time	--	
Scope / Dependency			

SWS Item	**Dlt818_Conf :**		
Name	DltImplementNVRamStorage		
Description	If set the functionality for storing and loading information in and from NVRam shall be availible.		
Multiplicity	1		
Type	EcucBooleanParamDef		
Default value	--		
ConfigurationClass	***Pre-compile time***	X	All Variants
	Link time	--	
	Post-build time	--	
Scope / Dependency			

SWS Item	**Dlt819_Conf :**		
Name	DltImplementSWCInjection		
Description	If the remote call from functions over the Dlt in SW-C shall be available.		
Multiplicity	1		
Type	EcucBooleanParamDef		
Default value	--		
ConfigurationClass	***Pre-compile time***	X	All Variants
	Link time	--	
	Post-build time	--	
Scope / Dependency			

SWS Item	**Dlt820_Conf :**
Name	DltImplementTimestamp
Description	If set the timestamp functionality for the header shall be available.
Multiplicity	1
Type	EcucBooleanParamDef
Default value	--

ConfigurationClass	***Pre-compile time***	X	All Variants
	Link time	--	
	Post-build time	--	
Scope / Dependency			

SWS Item	**Dlt821_Conf :**		
Name	DltImplementVerboseMode		
Description	If set the functionality for Verbose Mode shall be available.		
Multiplicity	1		
Type	EcucBooleanParamDef		
Default value	--		
ConfigurationClass	***Pre-compile time***	X	All Variants
	Link time	--	
	Post-build time	--	
Scope / Dependency			

SWS Item	**Dlt822_Conf :**		
Name	DltImplementVfbTrace		
Description	If set the the header files and the implementation of VFB-trace shall be generated.		
Multiplicity	1		
Type	EcucBooleanParamDef		
Default value	--		
ConfigurationClass	***Pre-compile time***	X	All Variants
	Link time	--	
	Post-build time	--	
Scope / Dependency			

SWS Item	**Dlt839_Conf :**		
Name	DltVfbTraceLogLevel		
Description	The log level of the log messages generated by the VFB-Trace. ImplementationType: Dlt_MessageLogLevelType		
Multiplicity	1		
Type	EcucIntegerParamDef		
Range	0 .. 6		
Default value	--		
ConfigurationClass	***Pre-compile time***	X	VARIANT-PRE-COMPILE, VARIANT-POST-BUILD
	Link time	X	VARIANT-LINK-TIME
	Post-build time	--	
Scope / Dependency			

SWS Item	**Dlt841_Conf :**		
Name	DltGptChannel		
Description	Reference to the hardware free running timer of the GPT module for time stamps (if no HWFRT is applied, calls to add timestamps are ignored).		
Multiplicity	1		
Type	Reference to [GptChannelConfiguration]		
ConfigurationClass	***Pre-compile time***	X	All Variants
	Link time	--	
	Post-build time	--	
Scope / Dependency			

No Included Containers

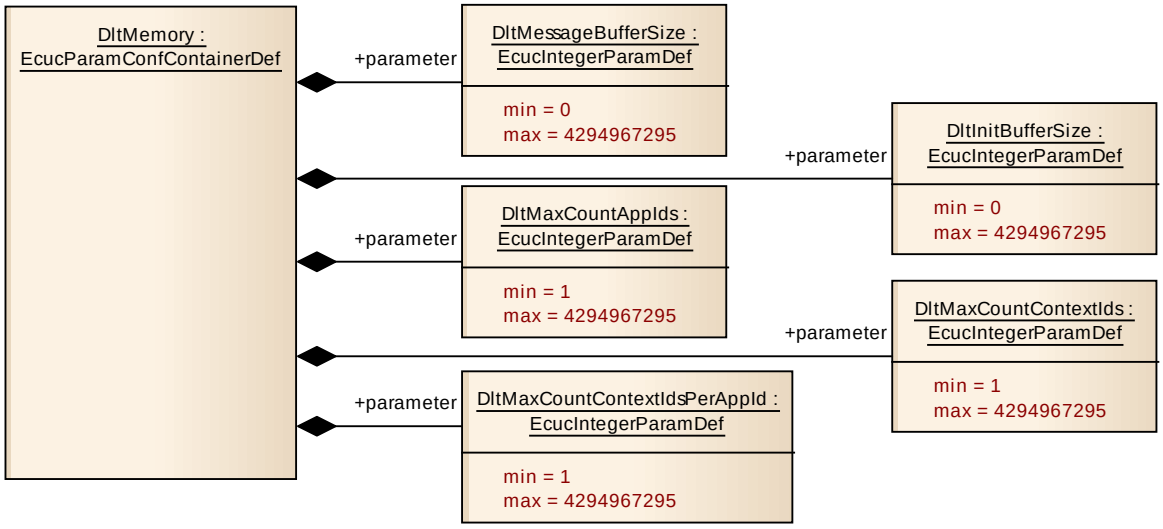

10.2.3 DltMemory

SWS Item	**Dlt828_Conf :**
Container Name	DltMemory
Description	Configuration parameters for reserving memory for some internal storing and buffer.
Configuration Parameters	

SWS Item	**Dlt823_Conf :**		
Name	DltInitBufferSize		
Description	Buffer size for the C-init buffer. This buffer is for storing messages from other BSW modules before Dlt is initialized. Unit: byte		
Multiplicity	1		
Type	EcucIntegerParamDef		
Range	0 .. 4294967295		
Default value	--		
ConfigurationClass	***Pre-compile time***	X	VARIANT-PRE-COMPILE, VARIANT-POST-BUILD
	Link time	X	VARIANT-LINK-TIME
	Post-build time	--	
Scope / Dependency	scope: Ecu		

SWS Item	**Dlt824_Conf :**		
Name	DltMaxCountAppIds		
Description	The maximum count of register able Application Ids. There shall be a table to manage registered Application IDs, this is the number of lines to hold in this table. Unit: byte		
Multiplicity	1		
Type	EcucIntegerParamDef		
Range	1 .. 4294967295		
Default value	--		
ConfigurationClass	***Pre-compile time***	X	VARIANT-PRE-

			COMPILE, VARIANT-POST-BUILD
	Link time	X	VARIANT-LINK-TIME
	Post-build time	--	
Scope / Dependency	scope: Ecu		

SWS Item	**Dlt825_Conf :**		
Name	DltMaxCountContextIds		
Description	The maximum count of registrable Context Ids. There shall be a table to manage registered Context IDs, this is the number of lines to hold in this table. Unit: byte		
Multiplicity	1		
Type	EcucIntegerParamDef		
Range	1 .. 4294967295		
Default value	--		
ConfigurationClass	***Pre-compile time***	X	VARIANT-PRE-COMPILE, VARIANT-POST-BUILD
	Link time	X	VARIANT-LINK-TIME
	Post-build time	--	
Scope / Dependency	scope: Ecu		

SWS Item	**Dlt826_Conf :**		
Name	DltMaxCountContextIdsPerAppId		
Description	Each Context ID belongs to a specific Application ID. Dlt shall handle the correlation between them. The table of the registered Application IDs shall hold for every Application ID several references to the proper Context IDs. This is the maximum count for Context IDs per Application ID. Unit: byte		
Multiplicity	1		
Type	EcucIntegerParamDef		
Range	1 .. 4294967295		
Default value	--		
ConfigurationClass	***Pre-compile time***	X	VARIANT-PRE-COMPILE, VARIANT-POST-BUILD
	Link time	X	VARIANT-LINK-TIME
	Post-build time	--	
Scope / Dependency	scope: Ecu		

SWS Item	**Dlt829_Conf :**		
Name	DltMessageBufferSize		
Description	Buffer size for storing Dlt messages for waiting to transmit over the Network (send buffer). Unit: byte		
Multiplicity	1		
Type	EcucIntegerParamDef		
Range	0 .. 4294967295		
Default value	--		
ConfigurationClass	***Pre-compile time***	X	VARIANT-PRE-COMPILE, VARIANT-POST-BUILD
	Link time	X	VARIANT-LINK-TIME
	Post-build time	--	
Scope / Dependency	scope: Ecu		

No Included Containers

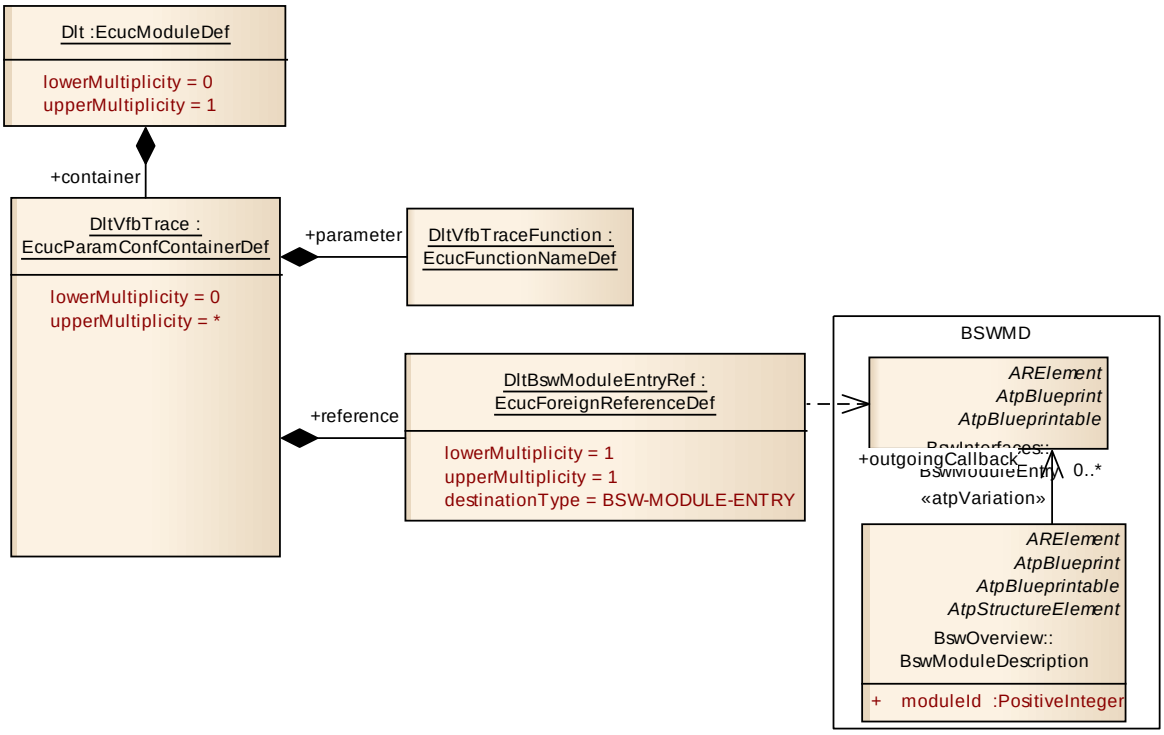

10.2.4 DltVfbTrace

SWS Item	**Dlt837_Conf :**
Container Name	DltVfbTrace
Description	All functions to trace from the VFB by the Dlt.
Configuration Parameters	

SWS Item	**Dlt838_Conf :**		
Name	DltVfbTraceFunction		
Description	The Dlt generator shall enable VFB tracing for a given hook function when there is a #define in the Dlt-VFB configuration header file for the hook function name and tracing is globally enabled. Example: #define Dlt_Rte WriteHook i1 p1 a Start. Also the corresponding function shall be generated. The exact argument description for the function is to take from the provieded BSWMododulDescription from the RTE module.		
Multiplicity	1		
Type	EcucFunctionNameDef		
Default value	--		
maxLength	--		
minLength	--		
regularExpression	--		
ConfigurationClass	***Pre-compile time***	X	All Variants
	Link time	--	
	Post-build time	--	
Scope / Dependency			

SWS Item	**Dlt804_Conf :**		
Name	DltBswModuleEntryRef		
Description	Foreign reference to the BSWModuleEntry describing the trace function implementation.		
Multiplicity	1		
Type	Foreign reference to [BSW-MODULE-ENTRY]		
ConfigurationClass	***Pre-compile time***	X	All Variants
	Link time	--	
	Post-build time	--	
Scope / Dependency			

No Included Containers

10.2.5 DltMultipleConfigurationContainer

SWS Item	**Dlt842_Conf :**
Container Name	DltMultipleConfigurationContainer [Multi Config Container]
Description	Container holding the sub-structure for multiple configuration support.
Configuration Parameters	

SWS Item	**Dlt831_Conf :**		
Name	DltNvRamBlockRef		
Description	Reference to the NvM Block which is used to store the Dlt parameters.		
Multiplicity	1		
Type	Reference to [NvMBlockDescriptor]		
ConfigurationClass	***Pre-compile time***	X	VARIANT-PRE-COMPILE
	Link time	--	
	Post-build time	X	VARIANT-POST-BUILD
Scope / Dependency			

Included Containers		
Container Name	***Multiplicity***	***Scope / Dependency***
DltBandwidth	1	Configuration parameters controlling network and diagnostic interfaces bandwidth. If DltImplementNVRamStorage is enabled this parameters are the initial values for the NVRam. If DltImplementNVRamStorage is not set, Link-Time or Post-Build configuration shall be uesd.
DltMessageFilterin g	1	Configuration parameters for setting message filtering properties in Dlt module.
DltProtocol	1	Configuration parameters for handling the specific protocol variants.

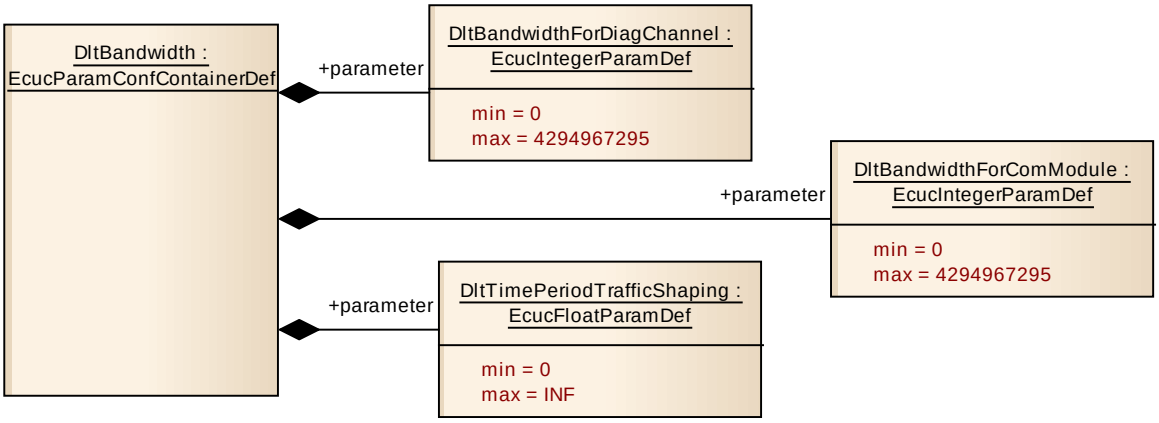

10.2.6 DltBandwidth

SWS Item	**Dlt801_Conf :**
Container Name	DltBandwidth
Description	Configuration parameters controlling network and diagnostic interfaces bandwidth. If DltImplementNVRamStorage is enabled this parameters are the initial values for the NVRam. If DltImplementNVRamStorage is not set, Link-Time or Post-Build configuration shall be uesd.
Configuration Parameters	

SWS Item	**Dlt802_Conf :**		
Name	DltBandwidthForComModule		
Description	For communication over the Dlt Communication Module the maximum bandwidth shall be set. Unit: kbit per second		
Multiplicity	1		
Type	EcucIntegerParamDef		
Range	0 .. 4294967295		
Default value	--		
ConfigurationClass	***Pre-compile time***	X	VARIANT-PRE-COMPILE
	Link time	X	VARIANT-LINK-TIME
	Post-build time	X	VARIANT-POST-BUILD
Scope / Dependency	scope: Ecu		

SWS Item	**Dlt803_Conf :**		
Name	DltBandwidthForDiagChannel		
Description	For communication over the DCM and as follows over the diagnostic interface the maximum bandwidth shall be set. Unit: kbit per second		
Multiplicity	1		
Type	EcucIntegerParamDef		
Range	0 .. 4294967295		
Default value	--		
ConfigurationClass	***Pre-compile time***	X	VARIANT-PRE-COMPILE
	Link time	X	VARIANT-LINK-TIME
	Post-build time	X	VARIANT-POST-BUILD
Scope / Dependency	scope: Ecu		

SWS Item	**Dlt835_Conf :**
Name	DltTimePeriodTrafficShaping

Description	For implementing a traffic shaping, a time window for measuring shall be provided. Unit: second		
Multiplicity	1		
Type	EcucFloatParamDef		
Range	`0 .. INF`		
Default value	--		
ConfigurationClass	***Pre-compile time***	X	VARIANT-PRE-COMPILE
	Link time	X	VARIANT-LINK-TIME
	Post-build time	X	VARIANT-POST-BUILD
Scope / Dependency	scope: Ecu		

No Included Containers

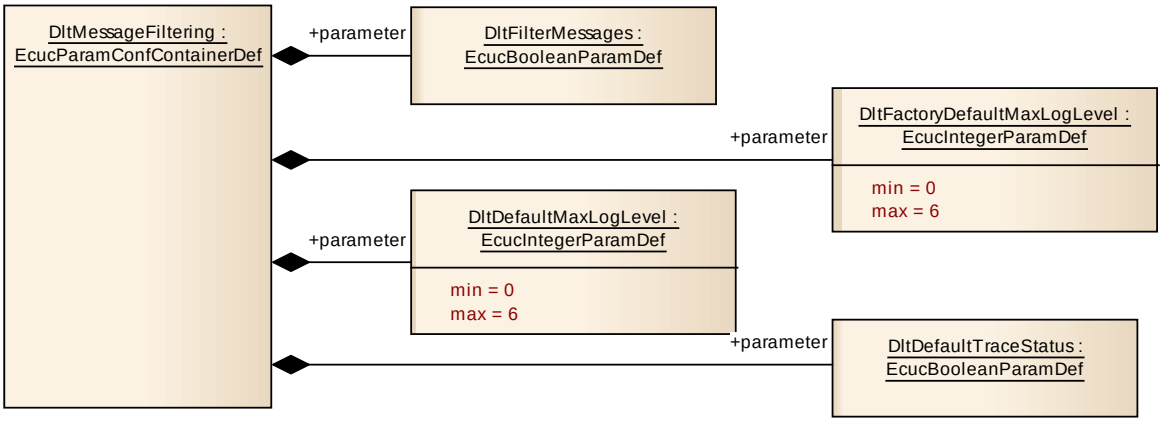

10.2.7 DltMessageFiltering

SWS Item	**Dlt830_Conf :**
Container Name	DltMessageFiltering
Description	Configuration parameters for setting message filtering properties in Dlt module.
Configuration Parameters	

SWS Item	**Dlt805_Conf :**		
Name	DltDefaultMaxLogLevel		
Description	The maximum log level a received message (from SW-C to Dlt) can have. This can also be modified at runtime and stored persistently in NVRAM. If DltImplementNVRamStorage is enabled this parameter is the initial value for the corospending NVRam entry. If DltImplementNVRamStorage is not set, Link-Time or Post-Build configuration shall be uesd. The value 0 means loging is disabled. ImplementationType: Dlt_MessageLogLevelType		
Multiplicity	1		
Type	EcucIntegerParamDef		
Range	0 .. 6		
Default value	--		
ConfigurationClass	***Pre-compile time***	X	VARIANT-PRE-COMPILE
	Link time	X	VARIANT-LINK-TIME
	Post-build time	X	VARIANT-POST-BUILD
Scope / Dependency			

SWS Item	**Dlt843_Conf :**		
Name	DltDefaultTraceStatus		
Description	Tells if trace messages shall be forwarded by Dlt. This functionality can also be modified at runtime and changed can stored persistently in NVRAM. If DltImplementNVRamStorage is enabled this parameter is the initial value for the corresponding NVRam entry. If DltImplementNVRamStorage is not set, Link-Time or Post-Build configuration shall be used.		
Multiplicity	1		
Type	EcucBooleanParamDef		
Default value	--		
ConfigurationClass	***Pre-compile time***	X	VARIANT-PRE-COMPILE
	Link time	X	VARIANT-LINK-TIME
	Post-build time	X	VARIANT-POST-BUILD
Scope / Dependency			

SWS Item	**Dlt807_Conf :**		
Name	DltFactoryDefaultMaxLogLevel		
Description	The maximum log level a received message (from SW-C to Dlt) can have. This is for setting DltDefaultMaxLogLevel to factory defaults. The value 0 means loging is disabled. ImplementationType: Dlt_MessageLogLevelType		
Multiplicity	1		
Type	EcucIntegerParamDef		
Range	0 .. 6		
Default value	--		
ConfigurationClass	***Pre-compile time***	X	VARIANT-PRE-COMPILE
	Link time	X	VARIANT-LINK-TIME
	Post-build time	X	VARIANT-POST-BUILD
Scope / Dependency			

SWS Item	**Dlt808_Conf :**		
Name	DltFilterMessages		
Description	This flag gives the Dlt the instruction to filter or not to filter incoming log or trace messages. If it is not set all incoming messages are forwarded to the communication channel. So also the caller of the DltSendXXXMessage can leave the field trace_info or log_info empty. If DltImplementNVRamStorage is enabled this parameter is the initial value for the corospending NVRam entry. If DltImplementNVRamStorage is not set, Link-Time or Post-Build configuration shall be uesd.		
Multiplicity	1		
Type	EcucBooleanParamDef		
Default value	--		
ConfigurationClass	***Pre-compile time***	X	VARIANT-PRE-COMPILE, VARIANT-POST-BUILD
	Link time	X	VARIANT-LINK-TIME
	Post-build time	--	
Scope / Dependency	dependency: Can only be true if DltImplementFilterMessages is true.		

No Included Containers

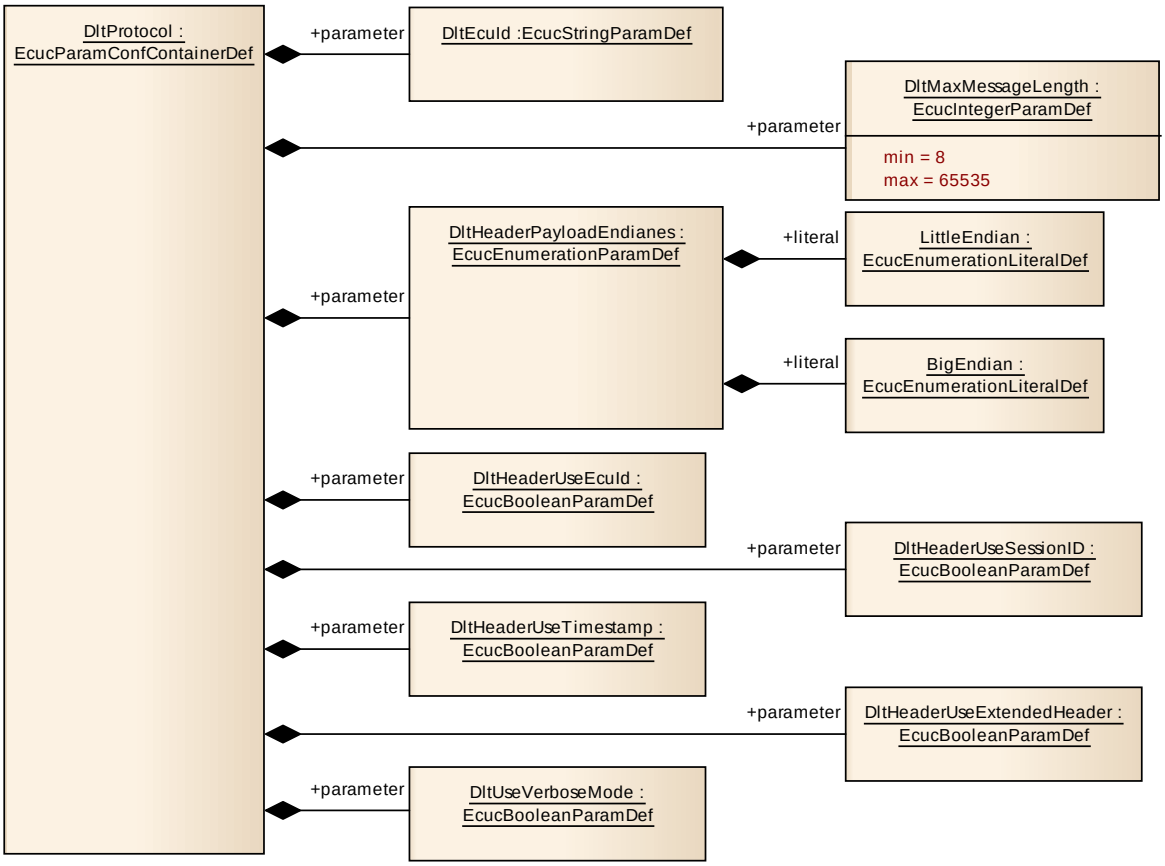

10.2.8 DltProtocol

SWS Item	**Dlt832_Conf :**
Container Name	DltProtocol
Description	Configuration parameters for handling the specific protocol variants.
Configuration Parameters	

SWS Item	**Dlt806_Conf :**		
Name	DltEcuId		
Description	This is the name of the ECU for use within the Dlt protocol. The meaning is described in the document. This name is transimitted within the Dlt protocol. There this are 4 characters. If you want to use an number representation type this as character.		
Multiplicity	1		
Type	EcucStringParamDef		
Default value	--		
maxLength	--		
minLength	--		
regularExpression	--		
ConfigurationClass	***Pre-compile time***	X	VARIANT-PRE-COMPILE
	Link time	X	VARIANT-LINK-TIME

	Post-build time	X	VARIANT-POST-BUILD
Scope / Dependency			

SWS Item	**Dlt810_Conf :**		
Name	DltHeaderPayloadEndianes		
Description	Determines the endianes of the CPU (Most Significant Byte).		
Multiplicity	1		
Type	EcucEnumerationParamDef		
Range	BigEndian	--	
	LittleEndian	--	
ConfigurationClass	***Pre-compile time***	X	VARIANT-PRE-COMPILE
	Link time	--	
	Post-build time	--	
Scope / Dependency			

SWS Item	**Dlt811_Conf :**		
Name	DltHeaderUseEcuId		
Description	Corresponds to field WEID (With ECU ID). If set ECU ID shall be placed in the header, else not. If DltImplementNVRamStorage is enabled this parameter is the initial value for the corospending NVRam entry. If DltImplementNVRamStorage is not set, Link-Time or Post-Build configuration shall be uesd.		
Multiplicity	1		
Type	EcucBooleanParamDef		
Default value	--		
ConfigurationClass	***Pre-compile time***	X	VARIANT-PRE-COMPILE
	Link time	X	VARIANT-LINK-TIME
	Post-build time	X	VARIANT-POST-BUILD
Scope / Dependency			

SWS Item	**Dlt812_Conf :**		
Name	DltHeaderUseExtendedHeader		
Description	Corresponds to field UEH (Use Extended Header). If set the Extended Header shall be attached, else not. If DltImplementNVRamStorage is enabled this parameter is the initial value for the corospending NVRam entry. If DltImplementNVRamStorage is not set, Link-Time or Post-Build configuration shall be uesd.		
Multiplicity	1		
Type	EcucBooleanParamDef		
Default value	--		
ConfigurationClass	***Pre-compile time***	X	VARIANT-PRE-COMPILE
	Link time	X	VARIANT-LINK-TIME
	Post-build time	X	VARIANT-POST-BUILD
Scope / Dependency	dependency: Can only be true if DltImplementExtendedHeader is true.		

SWS Item	**Dlt813_Conf :**
Name	DltHeaderUseSessionID
Description	Corresponds to field WSID (with Session ID). If set the Session ID shall be placed in the header, else not. If DltImplementNVRamStorage is enabled this parameter is the initial value for the corospending NVRam entry. If DltImplementNVRamStorage is not set, Link-Time or Post-

	Build configuration shall be uesd.		
Multiplicity	1		
Type	EcucBooleanParamDef		
Default value	--		
ConfigurationClass	***Pre-compile time***	X	VARIANT-PRE-COMPILE
	Link time	X	VARIANT-LINK-TIME
	Post-build time	X	VARIANT-POST-BUILD
Scope / Dependency			

SWS Item	**Dlt814_Conf :**		
Name	DltHeaderUseTimestamp		
Description	Corresponds to field WTMS (With Timestamp). If set the timestamp shall be placed in the header, else not. If DltImplementNVRamStorage is enabled this parameter is the initial value for the corospending NVRam entry. If DltImplementNVRamStorage is not set, Link-Time or Post-Build configuration shall be uesd.		
Multiplicity	1		
Type	EcucBooleanParamDef		
Default value	--		
ConfigurationClass	***Pre-compile time***	X	VARIANT-PRE-COMPILE
	Link time	X	VARIANT-LINK-TIME
	Post-build time	X	VARIANT-POST-BUILD
Scope / Dependency	dependency: Can only be true if DltImplementTimestamp is true.		

SWS Item	**Dlt827_Conf :**		
Name	DltMaxMessageLength		
Description	The maximum length of a Dlt log or trace message.		
Multiplicity	1		
Type	EcucIntegerParamDef		
Range	8 .. 65535		
Default value	--		
ConfigurationClass	***Pre-compile time***	X	VARIANT-PRE-COMPILE, VARIANT-POST-BUILD
	Link time	X	VARIANT-LINK-TIME
	Post-build time	--	
Scope / Dependency			

SWS Item	**Dlt836_Conf :**		
Name	DltUseVerboseMode		
Description	If this flag is set Dlt shall use the Verbose Mode for generating the header of the transport protocol. Also it shall store the information provided by registering Context ID and Application ID (description) at runtime if flag is set. If it is not set, the Non Verbose Mode shall be used. If DltImplementNVRamStorage is enabled this parameter is the initial value for the corospending NVRam entry. If DltImplementNVRamStorage is not set, Link-Time or Post-Build configuration shall be uesd.		
Multiplicity	1		
Type	EcucBooleanParamDef		
Default value	--		
ConfigurationClass	***Pre-compile time***	X	VARIANT-PRE-COMPILE
	Link time	X	VARIANT-LINK-TIME
	Post-build time	X	VARIANT-POST-BUILD

Scope / Dependency	dependency: Can only be true if DltImplementVerboseMode is true.

No Included Containers

10.3 Published Information

[Dlt510] ⌈The standardized common published parameters as required by BSW00402 in the General Requirements on Basic Software Modules [1] shall be published within the header file of this module and need to be provided in the BSW Module Description. The according module abbreviation can be found in the List of Basic Software Modules [14].

Additional module-specific published parameters are listed below if applicable. ⌋ (BSW00374, BSW00379, BSW003, BSW00318)

11 Not applicable requirements

[Dlt511] ⌈These requirements are not applicable to this specification.⌋ (BSW170, BSW00387, BSW00395, BSW00400, BSW00375, BSW00416, BSW00437, BSW168, BSW00427, BSW00431, BSW00432, BSW00434, BSW00336, BSW00339, BSW00422, BSW00417, BSW00409, BSW00386, BSW161, BSW162, BSW005, BSW164, BSW00325, BSW00326, BSW00342, BSW00343, BSW160, BSW00413, BSW00347, BSW00307, BSW00373, BSW00314, BSW00348, BSW00353, BSW00361, BSW00439, BSW00376)