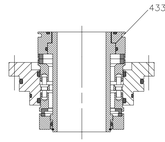

Akselitiiviste
Shaft seal
1:2.5

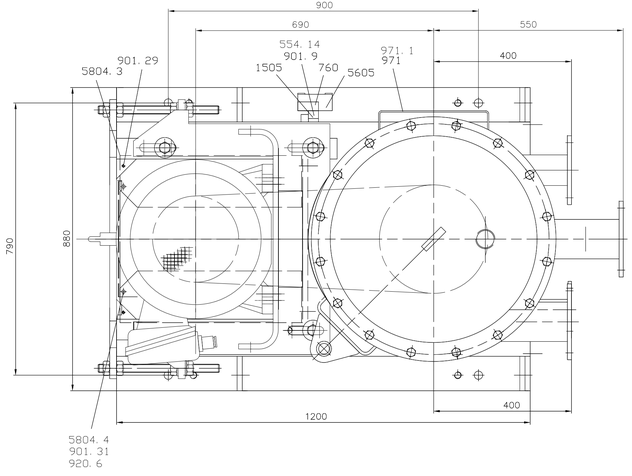

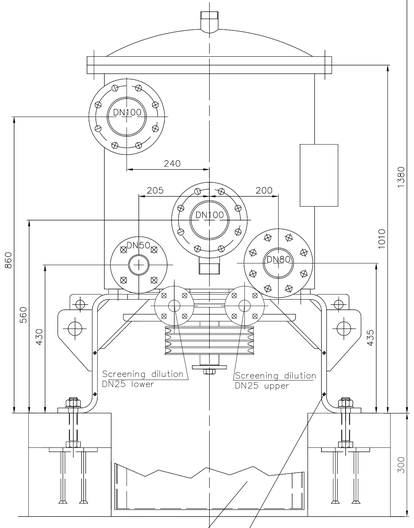

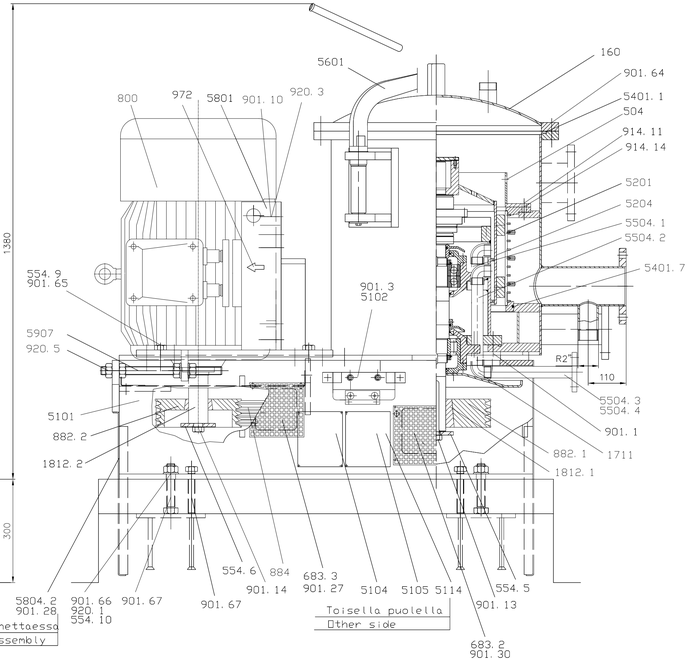

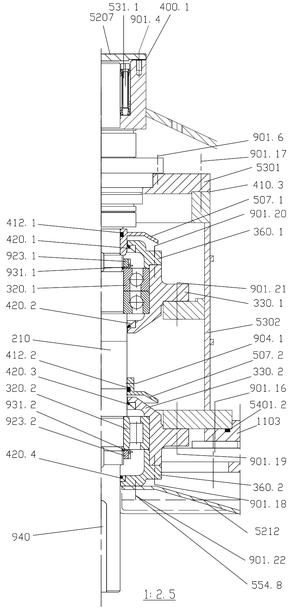

1:2.5

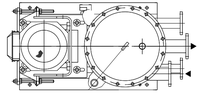

Sovitusasento
Position of assembly E

No.	Description	No.	Designed	Date	Approved	W.-No.	Note

GENERAL TOLERANCES UNLESS OTHERWISE SPECIFIED	Nominal dimension	±0.5	±3	±6	±30	±120	±400	±1000	±2000	±4000	±8000	±12000	±16000	±20000
– Bend dimensions	Tolerance	±2	±5	±7	±15	±30	±70	±150	±300	±600	±1200	±2000	±3000	±4000
– Machining ISO 2768-m		±0.1	±0.1	±0.2	±0.5	±0.8	±1.2	±3	±5	±8	±12	±16	±20	±25
– Chamfers, radius ISO 2768-m		±0.2	±0.5	±1.0										
– Cutting, bending ISO 2768-c		±0.2	±0.5	±0.5	±0.8	±1.2	±2	±3	±4	±5	±6	±7	±8	–
ANGULAR DIMENSIONS														
– Welding ISO 2553-B		±1	±1	±1										
– Machining ISO 2768-m	–Bending:	ISO 2768-c		±1°										

SYMBOLS	
–Surface roughness	ISO 1302-A5
–Welding symbols	ISO 2553
–Tolerancing	ISO 8015

GEOM.TOL.	
–Symbols	ISO 1101
–Welding	ISO7083-2
–Machining	ISO 2768-K

MISCELLANEOUS
–Weldingclass C (min.L) ISO 5817

Size		Scale	Product code, Type	Sort	Net weight (kg)
A114		1:5			0.0

Name	Date	Approved	Date
Designed: AUTOCAD		Checked: S-STANDARD	Designed: kSipuk05 22/10/2007
Drawn:		Approved:	Checked: kSipuk05 22/10/2007

ANDRITZ

Title: ASSEMBLY DRAWING FLOW

Approved: kTerno01 22/10/2007

Ref. MC no./Maker	Ref. dwg.	Old Drawing No.	Old Rev.	Rev. from
Project / Mark no.		Drawing no. 502289541	Rev. –	Sheet

This document contains material protected by copyright. Copyright belongs to ANDRITZ Oy. Copying, disclosure to third parties or other use without the consent of the owner is prohibited. Violation of this notice may result in legal action.