Rev	Description	Rev	Changed	Date	Approved
A	Changed part no		Ch.Nyström	02-10-2012	

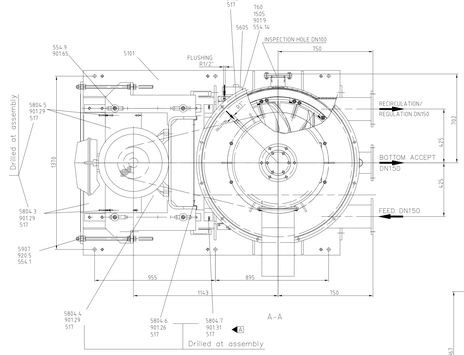

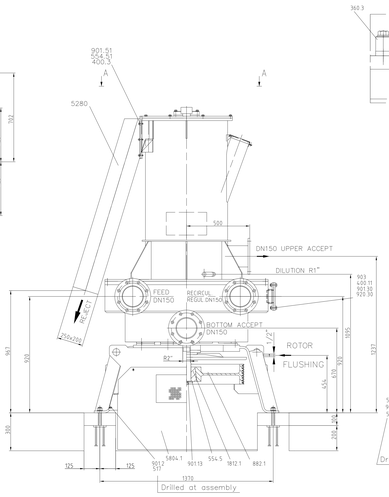

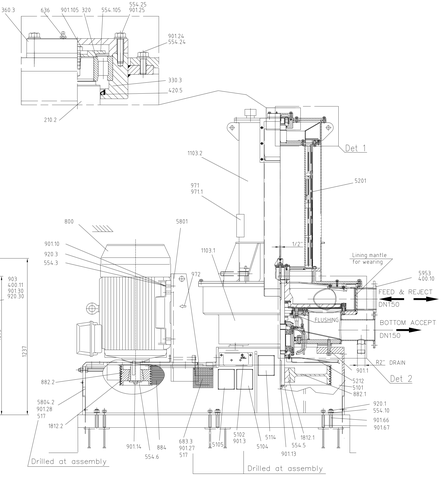

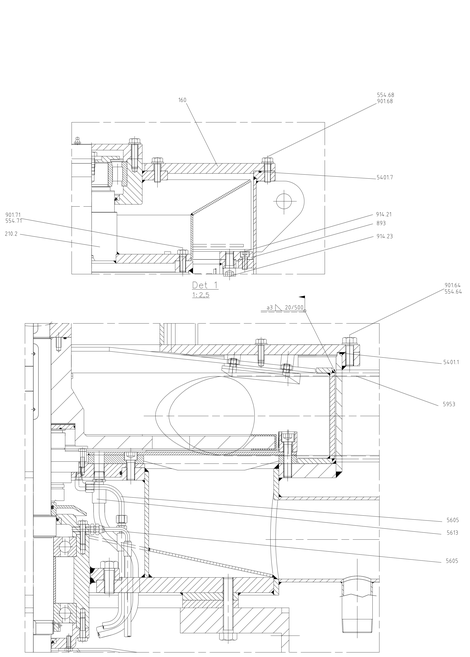

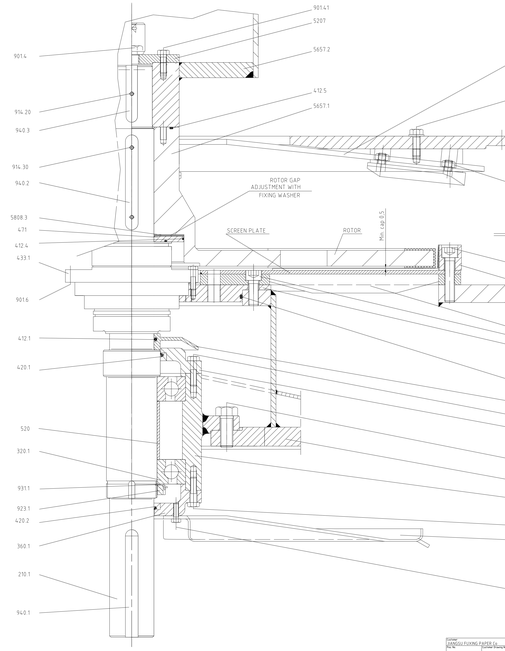

GUARD ON ASSEMBLY

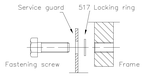

GUARD ON SERVICE

GENERAL TOLERANCES	Nominal	±0.5	±1	±5	±10	±100	±1000	±2000	±4000	±6000	±8000	±10000
LINEAR DIMENSIONS	Tolerance	±0.1	±0.2	±0.5	±1	±2	±3	±4	±5	±6	±7	±8
Machining	ISO 2768-1	±0.1	±0.2	±0.5	±1	±2	±3	±4	±5	±6	±7	±8
Casting, steel	ISO 8062	±0.5	±0.5	±0.5	±1	±1.5	±2	±3	±4	±5	±6	±7
Casting, cast iron	ISO 8062	±0.5	±0.5	±0.5	±1	±1.5	±2	±3	±4	±5	±6	±7
Casting, light alloy	ISO 8062	±0.5	±0.5	±0.5	±1	±1.5	±2	±3	±4	±5	±6	±7
ANGULAR DIMENSIONS	Nominal	0	10	50	120	400	1000	2000	4000	10000		
Machining, all	ISO 2768-1	±0°	±0°30'	±0°20'	±0°15'	±0°10'	±0°5'	±0°3'	±0°2'	±0°1'		
Machining, ISO 2768-2	Nominal	0	10	50	120	400	1000	2000	4000			
	Tolerance	±1°	±0°30'	±0°20'	±0°15'	±0°10'	±0°5'	±0°3'	±0°2'			

Flame cutting, ISO 9013-4	ISO 9013-4
Flame cutting, ISO 9013-5	ISO 9013-5
Cutting, heavy, ISO 9013-5	ISO 9013-5
Forgings, DIN 7526, DIN 7527	DIN 7526
MACHINE LIMITS	
Machining tolerance (1.1x2)	
INTERCHANGEABILITY	
Replacement for drawing	Not Replacement for drawing
Replaces	Replaced by
Cast Mat. No. Pattern	Reference drawing
Cast Mat. Cast Model	

Company		Date	Short Material Name
LINDQVIST FLUSHING PAPER CO.			
Ritz		Author	Short Material Standard
Project type		Project name	
Scale	1:1	Unit	mm
Sheet	1	Total sheets	12
Drawing type		Drawing number	
Material		Weight	
Surface treatment		Surface area	
Drawn		Date	
Checked		Date	
Approved		Date	
Revision		Date	
Replaced by		Date	
Replaces		Date	
Replaced by drawing		Date	
Replaces drawing		Date	
Drawing type		Date	
Drawing number		Rev	
7021341400 A		A	

ANDRITZ

This drawing is the property of ANDRITZ AG or its affiliates. It is protected by copyright laws and other intellectual property rights. Any use, reproduction, disclosure or distribution of its contents or any part thereof without express authorization is strictly prohibited. For the purpose of this notice, ANDRITZ AG means the ANDRITZ group of companies.