No.	Revision	No.	Designer	Date	Approved	Ok.	Date
0	ETAC CORRECTIONS REMOVED			21.06.2007			

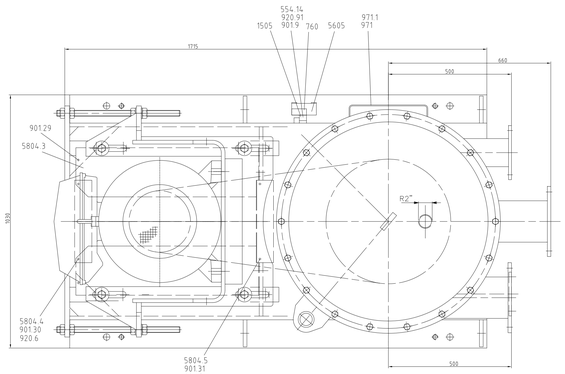

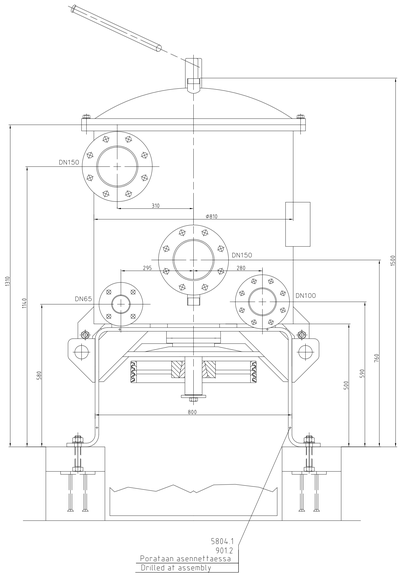

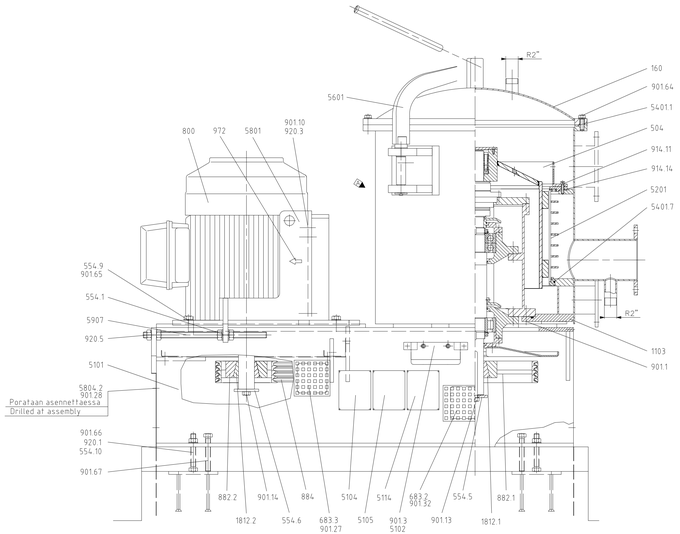

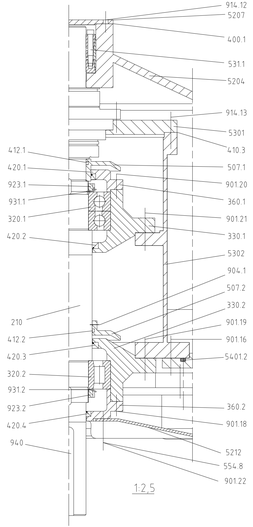

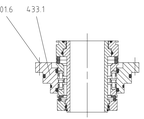

Akselitiiviste
Shaft seal
1:2.5

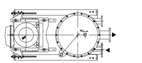

Sovitusasento
Position of assembly E

| | | |