Rev.	Description	No.	Designed	Date	Approved	M-film	Note
A	PMC CONNECTIONS REMOVED	1	KTKLAU02	25/09/2007			

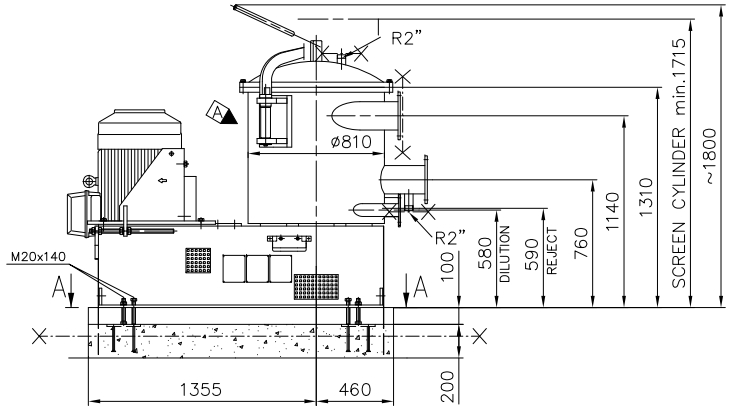

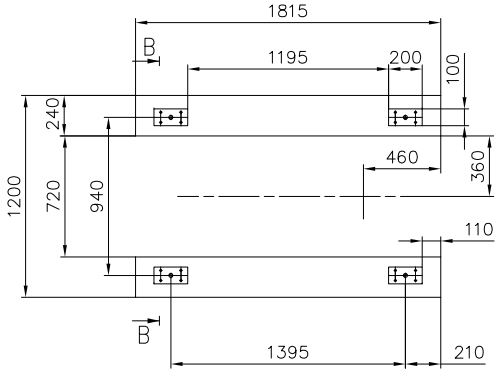

A–A

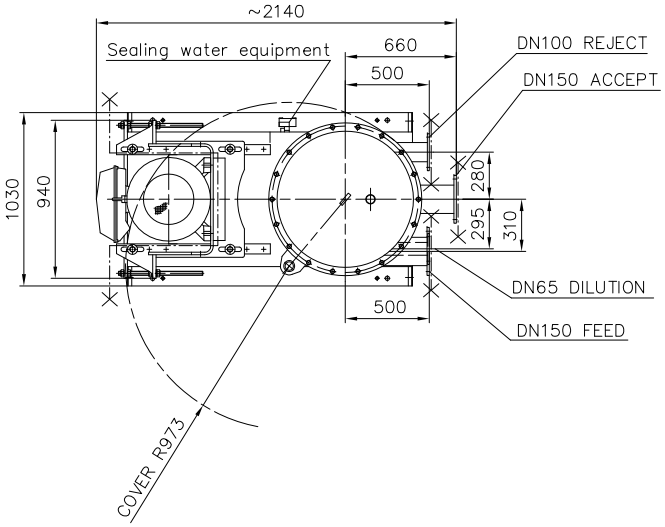

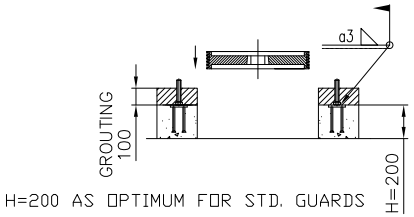

H=200 AS OPTIMUM FOR STD. GUARDS

B–B

DELIVERY LIMIT	X-·-·-·-X
MOTOR	45-75kW, 1500 rpm
FLANGE DRILLINGS	DIN 2576/ISO 7005
TOTAL WEIGHT FILLED WITH STOCK	2000 kg
NET WEIGHT WITHOUT MOTOR	1400 kg
MAX.INLET PRESSURE	600 kPa
DYNAMIC FACTOR	1.3
GENERAL TOLERANCES	ISO 2768-v

Size A2		Scale 1:20	Product code, Type F20	Sort	Net weight (kg) 0.0
Departm. PF	System AUTOCAD	Part Class. S=STANDARD	Languages EN / Pos. no.	Designed ktkmar19	Date 22/08/2007
	Material		Customer	Drawn ktkmar19	22/08/2007
			Title1 DIMENSIONAL DRAWING F20	Checked	
			Title2	Approved ktktee01	
ANDRITZ FIBER PREPARATION SYSTEMS			SAP Mat. no./Variant 131450578 / Ref. dwg / Old Drawing No	Old Rev. / M-Film	
			Project / Work no. / Drawing no. 502115546	Rev. A	Sheet

Drawing sheet ISO 5457:1999 – A2

This document constitutes confidential and proprietary information of Andritz Companies. Any party accepting receipt of this document does so on the express understanding and agreement that it will neither reproduce nor disclose the information contained herein nor use it for any purpose other than those expressly agreed to by any Andritz Company.