| Rev. | Description | No. | Designed | Date | Approved | Ch-Rev | Note |
|---|---|---|---|---|---|---|---|
| A | UPDATED | 0 | mekhal01 | 01/06/2007 | sinpos01 | | |
| B | UPDATED | 0 | mekhal01 | 04/06/2007 | sinpos01 | | |
| C | UPDATED | 0 | mekhal01 | 05/06/2007 | sinpos01 | | |

OSAT 15,38,39 JA 40 KUULUVAT TOIMITUKSEEN
MIKÄLI NE OVAT LUETELTU OSALUETTELOSSA

PARTS 15,38,39 AND 40 ARE INCLUDED IN THE DELIVERY
ONLY IF THEY ARE SHOWN IN THE PART LIST

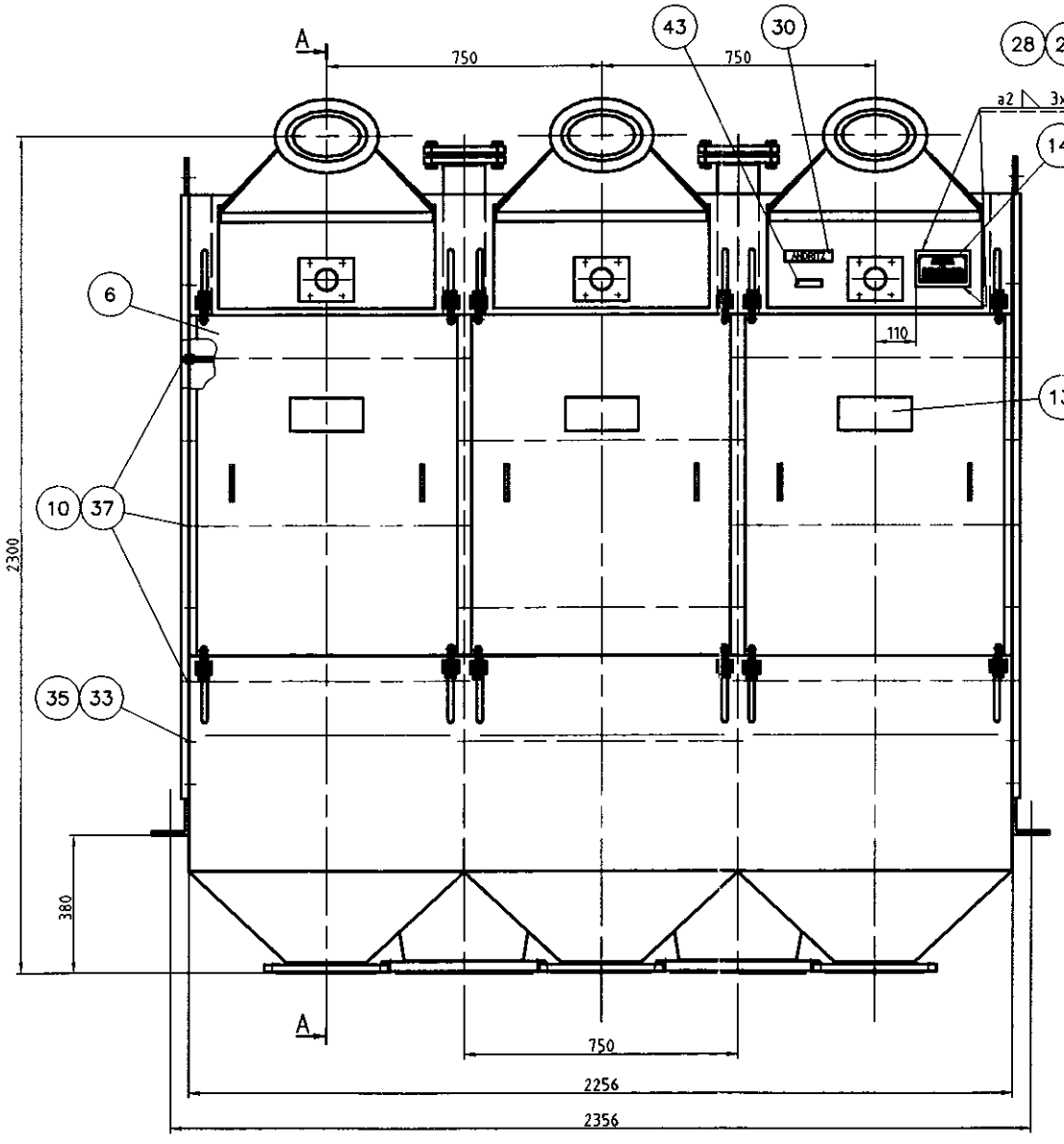


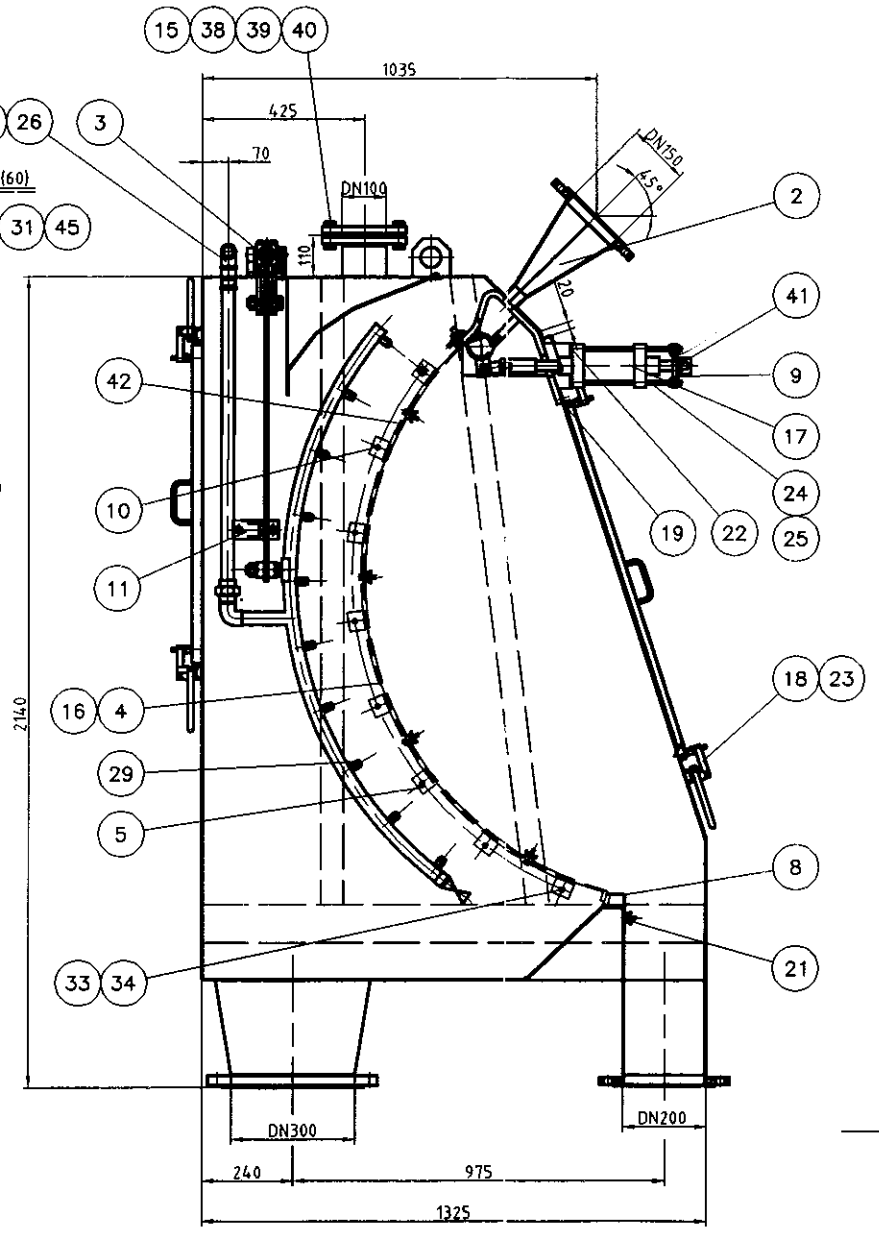


A–A

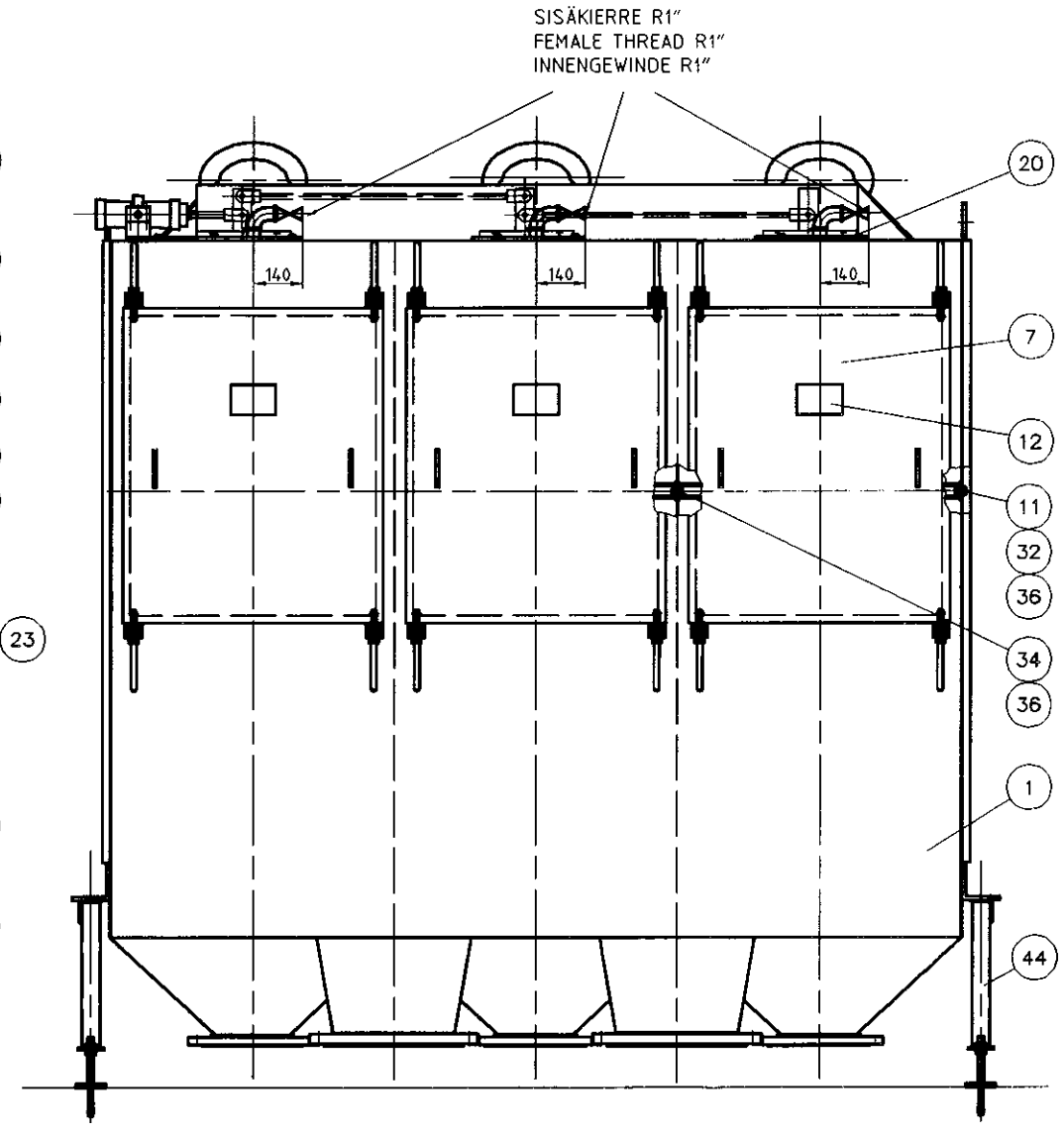


VALID COPY
28 APR 2007
ATC

| | | | | | |
|---|---|---|---|---|---|
| Size A1 | Scale 1:10 | Product code, Type SF25300 MicroScreen | | Sort 42 | Net weight (kg) 1301.0 |
| Drawn by, System PF AUTOCAD | Part Code S=STANDARD | Customer EN,FI | Pos. no. | Drawn mekhal01 | Date 10/04/2007 |
| Material | | Title MAIN ASSEMBLY MICRASCREEN TRIPLE DIN ATC | | Checked mekhal01 | 10/04/2007 |
| | | | | Accepted sinsep04 | 10/04/2007 |
| | | | | Approved sinpos01 | 10/04/2007 |
| | | SAP Mat. no./Variant 131281986 | Ref. dwg SF107396 | Old Drawing No. 501650486 | Old Rev. -- Ch-Rev. |
| | | Project / Work no. | | Drawing no. 501657520 | Rev. C Sheet |

ANDRITZ
FIBER PREPARATION SYSTEMS

| GENERAL TOL. STANDARD | Nominal measure | >0.5 <3 | >3 <6 | >6 <30 | >30 <120 | >120 <400 | >400 <1000 | >1000 <2000 | >2000 <4000 | >4000 <8000 | >8000 <12000 | >12000 <16000 | >16000 <20000 | >20000 |
|---|---|---|---|---|---|---|---|---|---|---|---|---|---|---|
| LINEAR DIMENSIONS | | | | | | | | | | | | | | |
| -Welding ISO13920-B | | ±1 | ±1 | ±1 | ±2 | ±2 | ±3 | ±4 | ±5 | ±10 | ±12 | ±14 | ±16 | |
| -Machining ISO 2768-m | | ±0.1 | ±0.1 | ±0.2 | ±0.3 | ±0.5 | ±0.8 | ±1.2 | ±2 | ±3 | ±4 | ±5 | ±6 | – |
| -Chamfers, rounds ISO 2768-m | | ±0.2 | ±0.5 | ±1.0 | | | | | | | | | | |
| -Cutting, bending ISO 2768-c | | ±0.2 | ±0.5 | ±0.5 | ±0.8 | ±1.2 | ±2 | ±3 | ±4 | ±5 | ±6 | ±7 | ±8 | – |
| ANGULAR DIMENSIONS | | | | | | | | | | | | | | |
| -Welding ISO13920-B | -Bending ISO 2768-c | ±4 | | | | | | | | | | | | |
| -Machining ISO 2768-m | -Bending ISO 2768-v | ±4 | | | | | | | | | | | | |

| SYMBOLS | |
|---|---|
| -Surface roughness | ISO 1302-Ra |
| -Welding symbols | ISO 2553 |
| -Tolerancing | ISO 8015 |

| GENERAL TOL. | |
|---|---|
| -Symbols | ISO 1101 |
| -Welding | ISO13920-G |
| -Machining | ISO 2768-K |

| | |
|---|---|
| -Flame cutting | < ISO 9013-B3 / ISO 9013-B0 |
| -Cuttings, machine. | ISO 8082-CTG |
| -Cuttings, hand. | ISO 8083-CT12 |
| -Forgings | SFS 3907, DIN 7527 |

MISCELLANEOUS
-Weldingclass C (min.), ISO 5817