Bureau
International des
Poids et
Mesures

Guide to the Realization of the ITS-90

1 édition 2018

Partie 1
Part 1

Introduction

January 01, 2018
01 janvier 2018

Bureau International
des Poids et Mesures

Guide to the Realization of the ITS-90
Part 1: Introduction

1st edition 2018

01 January 2018

Abstract

This paper is a part of guidelines, prepared on behalf of the Consultative Committee for Thermometry, on the methods how to realize the International Temperature Scale of 1990.

It gives a historical review and discusses the major issues linked to the establishment of temperature scales of today and tomorrow.

1. Scope

From 1927 to 1975, the various International Temperature Scales (ITSs) have incorporated a moderate amount of supplementary information concerning their practical realization. However, limitations of space prevented this information from being exhaustive. Furthermore, the lengthy periods between scale editions, ranging from seven to twenty-one years, have caused much of it to become outdated. The low temperature scale of 1976 (*Echelle Provisoire de Température de 1976 entre* $0.5\ \mathrm{K}$ *et* $30\ \mathrm{K}$, EPT-76)is the first one, which provided no such information. Supplementaryinformation was instead given in a more extensive and comprehensive form in a separate document, containing information on both the EPT-76 and the *International Practical Temperature Scale of 1968*, IPTS-68.For the *International Temperature Scale of 1990*, ITS-90, such an accompanying document was prepared in 1990 byWorking Group 1 *Defining fixed points and interpolating instruments* of the CCT and approved by the CCT. It is now called *Guide to the Realization of the ITS-90* and posted on the BIPM website. Its parts have been written as self-contained papers by different authors.

The *Guide to the Realization of the ITS-90* describes methods by which the ITS-90 can be realized successfully. However, the document should not be taken as laying down how this must be done. The description of any particular apparatus is more for illustration than prescription, and considerable variations can often be effective. Likewise, quoted numerical data and dimensions are mostly for guidance only. Methods of realizing the scale will continue to evolve, and this will be reflected in periodic revisions of the text. Techniques for the realization of the defining fixed points of the ITS-90, excluding the vapour-pressure points, and for the comparison of fixed-point cells, at the highest level of accuracy, have been recommended by Working Group 1 in [Mangum *et al.* 2000] and [Mangum *et al.* 1999], respectively.

Though many new methods for realizing the base unit kelvin, including the measurement of thermodynamic temperature, and new temperature fixed points have been developed, the *Guide to the Realization of the ITS-90* strictly deals only with the realization of the ITS-90 according to its definition. Some references for new or alternative methods are given as background information in a few chapters. A description of such methods can be found in the companion documents posted as *Guide on Secondary Thermometry* on the BIPM website. A *Guide to the Realization of the Provisional Low Temperature Scale of 2000* (PLTS-2000) is also available there.] Future versions of the *Mise en Pratique of the Definition of the Kelvin* (MeP-K) will endorse multiple methods for the realization of the kelvin [Ripple *et al.* 2010, Fellmuth *et al.* 2016]. However, a diversity of endorsements could lead to the risk that reportedtemperature values may be ambiguous, so proper notation and an explanation of the methods used are given in the MeP-K.

2. Historical background

The ITS-90 [CIPM 1989, Preston-Thomas 1990] has evolved from a series of earlier ITSs. These were formulated to allow measurements of temperature to be made accurately and reproducibly, with temperatures measured on these scales being as close an approximation as possible to the corresponding thermodynamic temperatures. A full description of these scales, together with a historical review, can be found in, for example, [Quinn 1990]. A brief description of several of the scales is also given in the appendix to the text of the ITS-90. This description is reproduced here accompanied by some explanations. In addition, details of three further scales (Normal Hydrogen Scale, ITS-90, and PLTS-2000) are discussed, with special emphasis laid on the structure, the thermodynamic basis, the uncertainty, and the reproducibility of the ITS-90. The historical background should aid in understanding the methods applied for the two scales currently in effect (ITS-90 and PLTS-2000). Finally, ideas are added on a possible improvement of the ITS by establishing a new ITS-XX, which is a long-term task. This should especially illustrate the deficiencies of the ITS-90, which may be of interest for special applications.

2.1. Normal Hydrogen Scale

The Normal Hydrogen Scale was adopted by the International Committee for Weights and Measures (CIPM) at its sixth session, and was subsequently approved by the first General Conference on Weights and Measures (CGPM) [CGPM 1889]. This temperature scale had been developed by Chappuis in the laboratories of the International Bureau of Weights and Measures (BIPM). It was based on gas thermometer measurements using the ice and steam points at 0 °C and 100 °C as fixed points, and was transferred to mercury-in-glass thermometers for distribution to other laboratories. At that time, the temperature range of this scale was from -25 degrees centigrade to +100 degrees centigrade, a range that was gradually extended in subsequent years. In 1913, the fifth CGPM approved the use of gases other than hydrogen, and expressed its readiness to substitute thermodynamic temperatures in place of the Normal Hydrogen Scale as soon as that became practicable.

2.2. International Temperature Scale of 1927 (ITS-27)

The seventh CGPM adopted provisionally, pending the acquisition of better thermodynamic data, the International Temperature Scale of 1927 [CGPM 1927], to overcome the practical difficulties of the direct realization of thermodynamic temperatures by gas thermometry, and as a universally acceptable replacement for the differing existing national temperature scales. The ITS-27 was based upon a number of reproducible temperatures, or fixed points, to which numerical values were assigned, and three standard instruments, each of the instruments being calibrated at one or more of the fixed points. The calibrations gave the constants for the formulae that defined temperatures in the various temperature ranges. A platinum resistance thermometer (PRT) was used for the lowest temperature range, a platinum10%rhodium-platinum (Pt10%Rh Pt) thermocouple for the middle range, and an optical pyrometer for the highest range.

The fixed points for the PRT range were the melting point of ice (0.000 °C) and the boiling points of oxygen, water and sulphur, defined as −182.97 °C, 100.000 °C, and 444.60 °C, respectively. The resistance-temperature interpolating formulae were the

Callendar equation between 0 °C and 660 °C and the Callendar-van Dusen equation between −190 °C and 0 °C. The permitted range of the constants of these formulae imposed some degree of quality control in the thermometer construction.

The fixed points for the Pt10%Rh-Pt thermocouple range were the melting points of silver and gold, defined as 960.5 °C and 1 063 °C, respectively, while a third calibration point (not a fixed) was the freezing point of antimony (630.5 °C) as measured by a calibrated PRT. The EMF-temperature interpolating formula was a quadratic that defined temperatures between 660 °C and 1 063 °C. The permitted ranges of the constants imposed a degree of quality control on the composition of the thermocouple wires.

Both the lower and upper limits of the temperature range assigned to the PRT were significant extensions beyond the associated calibration temperatures of approximately 90 K and 444 °C. One awkward result of the upper extension was the non-existence of an official freezing temperature for aluminium. This freezing temperature was extremely close to the assigned changeover point of 660 °C. However, it proved to be a little above the assigned upper limit of the PRT, yet a little below the, supposedly identical, lower limit assigned to the Pt10%Rh Pt thermocouple. At the other end of the PRT range, it was found that for temperatures significantly below the lowest calibration temperature, departures from thermodynamic temperatures were unacceptably high.

The fixed point for the optical pyrometer was the melting point of gold, which was used in conjunction with the (approximate) Wien radiation law relating spectral concentration of radiance to temperature. The value assigned to the second radiation constant c2 was 1.432×10^{-2} mK (c1 disappears in the comparison between the unknown and the calibration temperatures). Wavelength restrictions were the use of "visible" monochromatic radiation with $\lambda T \leq 3 \times 10^{-3}$ mK. The various errors arising from the use of the Wien law as well as from the values assigned to the gold point and to c2 were not in general significant for, or even detectable by, the users of that period.

2.3. International Temperature Scale of 1948 (ITS-48)

The ninth CGPM adopted the International Temperature Scale of 1948 [CGPM 1948]. Changes from the ITS-27 were:

- the lower limit of the PRT range was changed from −190 °C to the defined oxygen boiling point of −182.97 °C;
- the junction of this range and the thermocouple range became the measured antimony freezing point (about 630 °C) instead of 660 °C;
- the silver freezing point was defined as being 960.8 °C instead of 960.5 °C;
- the gold freezing point replaced the gold melting point (1 063 °C);
- the Wien law was replaced by the Planck radiation law;
- the value assigned to the second radiation constant became 1.438×10^{-2} mK;
- the permitted ranges for the constants in the interpolating formulae for the PRTs and thermocouples were modified;
- the limitation on λT for optical pyrometry ($\lambda T < 3 \times 10^{-3}$ mK) was changed to the requirement that "visible" radiation be used.

2.4. International Practical Temperature Scale of 1948, amended edition of 1960 (IPTS-48)

The eleventh CGPM adopted the International Practical Temperature Scale of 1948, amended edition of 1960 [CGPM 1960]. The modifications to the ITS-48 were:

- the triple point of water, which in 1954 had become the sole point defining the unit of thermodynamic temperature, the kelvin, replaced the melting point of ice as the calibration point in this region;
- the freezing point of zinc, defined as 419.505 °C, became a preferred alternative to the sulphur boiling point (444.6 °C) as a calibration point;
- the permitted ranges of the constants of the interpolation formulae for the platinum resistance thermometers and the thermocouples were further modified;
- the restriction to "visible" radiation for optical pyrometry was removed.

Inasmuch as the numerical values of temperature on the ITS-48 were the same as on the IPTS-48, the latter was not a revision of the scale of 1948 but merely an amended form of it.

2.5. International Practical Temperature Scale of 1968 (IPTS-68)

In 1968 the CIPM promulgated the International Practical Temperature Scale of 1968, having been invited to do so by the thirteenth CGPM of 1967/68 [CGPM 1967/68]. The IPTS-68 incorporated very extensive changes from the IPTS-48. These included numerical changes, intended to bring it more nearly in accord with thermodynamic temperatures, which were sufficiently large to be apparent to many users. Other changes were as follows:

- the lower limit of the scale was extended down to 13.81 K;
- at even lower temperatures (0.5 K to 5.2 K) the use of the 1958 ^{4}He vapour pressure scale [Brickwedde *et al.* 1960] and the 1962 ^{3}He vapour pressure scale [Sydoriak *et al.* 1964] were recommended;
- six new fixed points were introduced: the triple point of equilibrium hydrogen (13.81 K), an intermediate equilibrium-hydrogen vapour-pressure point (17.042 K), the boiling point of equilibrium hydrogen (20.28 K), the boiling point of neon (27.102 K), the triple point of oxygen (54.361 K), and the freezing point of tin (231.968 1 °C), which became a permitted alternative to the boiling point of water;
- the boiling point of sulphur was deleted;
- the values assigned to four fixed points were changed: the boiling point of oxygen (90.188 K), the freezing point of zinc (419.58 °C), the freezing point of silver (961.93 °C), and the freezing point of gold (1 064.43 °C);
- the interpolating formulae for the resistance thermometer range became very much more complex;
- the value assigned to c2 became $1.438\,8 \times 10^{-2}$ mK;
- the permitted ranges of the constants for the interpolation formulae for the platinum resistance thermometers and thermocouples were again modified.

2.6. International Practical Temperature Scale of 1968, amended edition of 1975 (IPTS-68(75))

The International Practical Temperature Scale of 1968, amended edition of 1975 [CGPM 1975, Preston-Thomas 1976], was adopted by the fifteenth CGPM in 1975. As was the case for the IPTS-48 vis-à-vis the ITS-48, the IPTS-68(75) introduced no numerical changes in any measured temperature T_{68}. Most of the extensive textual changes in the scale were intended only to clarify and simplify its use. More substantive changes were:

- the condensation point of oxygen replaced, with no change in numerical value, the boiling point of oxygen;
- the triple point of argon ($83.798\ \mathrm{K}$) was introduced as a permitted alternative to the condensation point of oxygen;
- new values of the isotopic composition of naturally occurring neon were adopted;
- the recommendation to use the helium vapour pressure scales was withdrawn.

2.7. Echelle Provisoire de Température de 1976 entre $0{,}5\ \mathrm{K}$ et $30\ \mathrm{K}$ (EPT-76)

The 1976 Provisional $0.5\ \mathrm{K}$ to $30\ \mathrm{K}$ Temperature Scale, EPT-76 [BIPM 1979], was adopted in order to provide an agreed basis for thermometry in that temperature range. It was intended in particular to:

- provide a smooth interpolation in place of the erratic interpolation below $27\ \mathrm{K}$, which had been found in the IPTS-68, and thus, substantially reduce the errors (with respect to corresponding thermodynamic values);
- correct the thermodynamic errors in the 1958 ^{4}He and 1962 ^{3}He vapour-pressure scales;
- bridge the gap between $5.2\ \mathrm{K}$ and $13.81\ \mathrm{K}$, in which there had not previously been an ITS.

Other objectives in devising the EPT-76 were "that it should be thermodynamically smooth, that it should be continuous with the IPTS-68 at $27.1\ \mathrm{K}$, and that it should agree with thermodynamic temperature T as closely as these two conditions allow". In contrast with the IPTS-68, and to ensure its rapid adoption, several methods of realizing the EPT-76 were approved. These included:

- using a thermodynamic interpolation instrument and one or more of eleven listed reference points (that included five superconductive transitions);
- taking differences from the IPTS-68 above $13.81\ \mathrm{K}$;
- taking differences from helium vapour-pressure scales below $5\ \mathrm{K}$;
- taking differences from certain well-established laboratory scales.

To the extent that these methods lacked internal consistency it was admitted that slight differences between realizations might be introduced. However, the advantages to be gained by adopting the EPT-76 as a working scale until such time as the IPTS-68 was revised and extended were considered to outweigh the disadvantages [Durieux *et al.* 1979, Pfeiffer and Kaeser 1982].

2.8. International Temperature Scale of 1990 (ITS-90)

The International Temperature Scale of 1990 was adopted by the CIPM in 1989 [CIPM 1989] in accordance with the request embodied in Resolution 7 of the 18th CGPM [CGPM 1987] and came into effect on 1 January 1990. The full text of the ITS-90 is available on the BIPM website; the following excerpt (the introduction to Section 3 of the text of the ITS-90) constitutes a brief description:

- Between $0.65\ \mathrm{K}$ and $5.0\ \mathrm{K}$, T_{90} is defined in terms of the vapour-pressure temperature relations of ^{3}He and ^{4}He.
- Between $3.0\ \mathrm{K}$ and the triple point of neon ($24.556\,1\ \mathrm{K}$), T_{90} is defined by means of a helium gas thermometer calibrated at three experimentally realizable temperatures having assigned numerical values (defining fixed points) and using specified interpolation procedures.
- Between the triple point of equilibrium hydrogen ($13.803\,3\ \mathrm{K}$) and the freezing point of silver ($1\,234.93\ \mathrm{K}$), T_{90} is defined by means of PRTs calibrated at specified sets of defining fixed points and using specified interpolation procedures.
- Above the freezing point of silver ($1\,234.93\ \mathrm{K}$), T_{90} is defined in terms of a defining fixed point and the Planck radiation law.

The ITS-90 differs from the IPTS-68 in several important respects:

- It extends to lower temperature, $0.65\ \mathrm{K}$ instead of $13.8\ \mathrm{K}$, and hence also replaces the EPT-76 from $0.65\ \mathrm{K}$ to $30\ \mathrm{K}$. The range was limited to $0.65\ \mathrm{K}$ for the simple reason that it did not seem possible to measure ^{3}He vapour pressures below 100 Pa with the small relative uncertainty of order 0.1 % to achieve an uncertainty of T_{90} of $0.1\ \mathrm{mK}$.
- In most ranges, it is in closer agreement with thermodynamic temperatures.
- It has improved continuity and accuracy.
- It has a number of overlapping ranges and sub-ranges, and in certain ranges it has alternative but substantially equivalent definitions.
- New versions of the helium vapour-pressure scales are not merely recommended but are an integral part of the scale.
- It includes a gas thermometer, calibrated at three fixed points, as one of the defining instruments.
- The upper limit of the PRT as the defining instrument has been raised from $630\ ^\circ\mathrm{C}$ to the silver point ($961.78\ ^\circ\mathrm{C}$).
- The Pt10%Rh-Pt thermocouple is no longer a defining instrument of the scale, and thus the slope discontinuity, which existed in IPTS-68 at $630\ ^\circ\mathrm{C}$, the junction between the PRT and thermocouple ranges, has been removed.
- The range based upon the Planck radiation law begins at the silver point instead at the gold point, and any one of the silver, gold or copper freezing points may be selected as the reference point for this part of the scale.

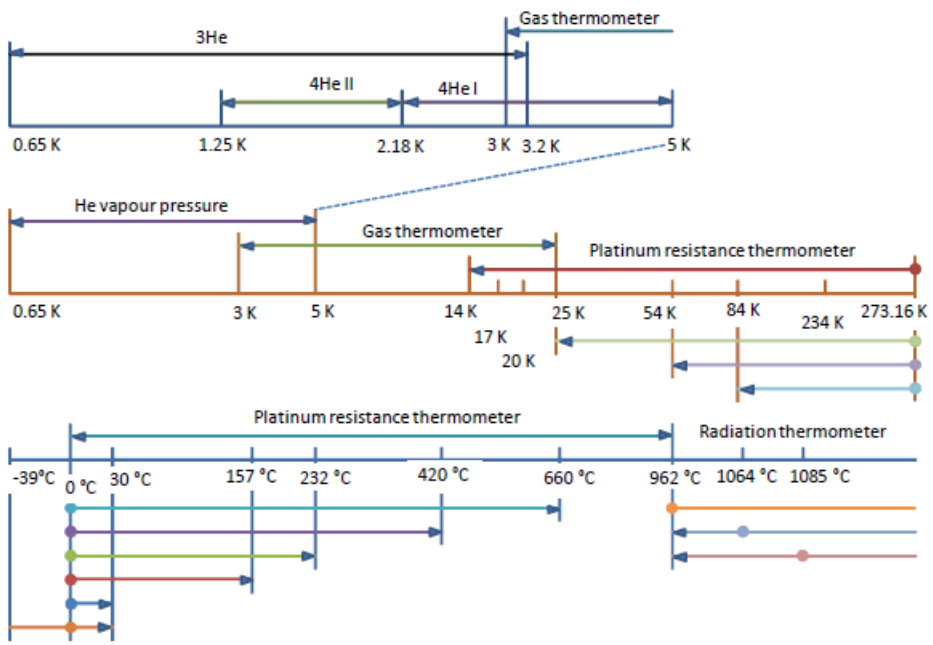

Figure 1 — Schematic representation of the ranges, sub-ranges and interpolation instruments of ITS-90. The temperatures shown are approximate only.

The design of the ITS-90 is shown schematically in Figure 1, and the list of defining fixed points is given in Table 1. The thermodynamic basis of ITS-90 is described in [Rusby *et al.* 1991]. The estimation of the uncertainty of realizing the fixed points suffers from the fact that complete uncertainty budgets treating the influence of impurities, as recommended in *Guide* Section 2.1 Influence of impurities,are available only in rare cases. Therefore, two different estimates are given in Table 1. The larger $u(T_{90})$ values are, except for the vapour-pressure points and the freezing points of Auand Cu, standard deviations of the results of international inter-comparisons of fixed-point realizations: e-H_2, Ne, O_2, Ar: Star intercomparison of sealed triple-point cells [Fellmuth *et al.* 2012]; Hg to Zn: Key comparison CCT-K3 [Mangum *et al.* 2002]; Al and Ag: Key comparison CCT-K4 [Nubbemeyer and Fischer 2002]; H_2O: Key comparison CCT-K7 [Stock *et al*. 2006]. Key comparison CCT-K3 was performed using PRTs as transfer standards; thus, the uncertainty values may be larger due to the possible instability of the PRTs. For the vapour-pressure points, average published values are listed. The smaller $u(T_{90})$ values given in parenthesis are the smallest uncertainty estimates claimed by metrological institutes. The estimates given for the freezing points of Au and Cu, which are only used for the calibration of radiation thermometers, are based on a document published by Working Group 5 of the CCT [Fischer *et al.* 2003], where the larger value corresponds to the “normal value”, and the smaller one to the “best value”. The values $T-T_{90}$ are estimates of the differences between thermodynamic temperatures and the ITS-90, and $u(T-T_{90})$ are their uncertainties, as published by Working Group 4 of the CCT in [Fischer *et al.* 2011] and summarised in Section 4 of the MeP-K. In these documents, interpolation functions for $T-T_{90}$ are also given.

Table 1. The defining fixed points of the ITS-90. The values $u(T_{90})$ are estimates for thestandard uncertainty of the current best practical realization (see text). The values $T-T_{90}$ are estimates of the differences

between thermodynamic temperatures and the ITS-90, and $u(T-T_{90})$ are their uncertainties, as published in [Fischer *et al.* 2011] and summarised in Section 4 of the MeP-K.

T_{90} /K	t_{90} /°C	Substance [a]	State [b]	$W_r(T_{90})$ [c]	$u(T_{90})$ /mK	$T-T_{90}$ /mK	$u(T-T_{90})$ /mK
3 to 5	−270 to −268	He	vp	—	0.2 (0.03)	0	0.1
13.803 3	−259.346 7	e-H_2	tp	0.001 190 07	0.03 (0.05)	0.44	0.14
≈ 17.035	≈ −256.115	e-H_2 or He	vp or gp	0.002 296 46	0.2 (0.03)	0.51	0.16
≈ 20.27	≈ −252.88	e-H_2 or He	vp or gp	0.004 235 36	0.2 (0.03)	0.32	0.17
24.556 1	−248.593 9	Ne	tp	0.008 449 74	0.09 (0.05)	−0.23	0.20
54.358 4	−218.791 6	O_2	tp	0.091 718 04	0.06 (0.02)	−1.06	1.6
83.805 8	−189.344 2	Ar	tp	0.215 859 75	0.06 (0.02)	−4.38	1.3
234.315 6	−38.834 4	Hg	tp	0.844 142 11	0.2 (0.1)	−3.25	1.0
273.16	0.01	H_2O	tp	1.000 000 00	0.05 (0.03)	0	0
302.914 6	29.764 6	Ga	mp	1.118 138 89	0.2 (0.03)	4.38	0.4
429.748 5	156.598 5	In	fp	1.609 801 85	0.8 (0.2)	10.1	0.8
505.078	231.928	Sn	fp	1.892 797 68	0.6 (0.2)	11.5	1.3
692.677	419.527	Zn	fp	2.568 917 30	0.8 (0.4)	13.8	6.9
933.473	660.323	Al	fp	3.376 008 60	2 (0.5)	28.7	6.6
1 234.93	961.78	Ag	fp	4.286 420 53	4 (0.6)	46.2	14
1 337.33	1 064.18	Au	fp	—	25 (8)	39.9	20
1 357.77	1 084.62	Cu	fp	—	25 (8)	52.1	20

(*a*) The temperature values are defined for ideally pure substances. Between 1.25 K and 3.2 K bothhelium isotopes (^{3}He and ^{4}He) can be used. For hydrogen, the SLAP (Standard Light Antarctic Precipitation) deuterium content is prescribed in a Technical Annex of the MeP-K, and water must have the VSMOW (Vienna Standard Mean Ocean Water) isotopic composition. (In the Technical Annex, also functions are specified that allow correcting to these isotopic reference compositions.) All other substances are of natural isotopic composition. e-H_2 is hydrogen at the equilibrium concentration of the two nuclear-spin isomers (often designated by the prefixes ortho and para).

(*b*) For complete definitions and advice on the realization of these various states, see *Guide* Chapter 2 *Fixed points*. The symbols have the following meaning: vp: vapour-pressure point; tp: triple point (temperature at which the solid, liquid and vapour phases are in equilibrium); gp: gas-thermometer point (temperature realized with an interpolating constant-volume gas thermometer, see *Guide* Chapter 4 *Gas Thermometry*); mp, fp: melting point, freezing point (temperature, at a pressure of 101325 Pa, at which the solid and liquid phases are in equilibrium).

(*c*) Reference value for the PRT resistance ratio $W(T_{90}) = R(T_{90})/R(0.01\,°\mathrm{C})$.

Below 1 K, the Provisional Low Temperature Scale from 0.9 mK to 1 K (PLTS-2000) [CIPM 2001] is a better approximation of thermodynamic temperature than ITS-90. A vapour-pressure scale, which is consistent with the PLTS-2000, has been established in [Engert *et al.* 2007]. According to the results presented in this paper, the difference $T-T_{90}$ amounts to −1.6 mK at 0.65 K with an uncertainty of $u(T-T_{90}) = 0.43$ mK.

One of the guiding principles in setting up the ITS-90 was that it should. allow the user as much choice in its realization as was compatible with an accurate and reproducible scale. For this reason the scale includes many sub-ranges. Within all except one of these,

T_{90} is defined independently of calibration points outside the range. (The exception is the PRT range extending upwards from the triple point of neon (24.556 1 K), which calls for a calibration at the triple-point of hydrogen (13.803 3 K).) Thus, if a PRT is to be calibrated over the whole low-temperature range from 13.8 K to 273.16 K, all of the eight calibration points in that range must be used. If, however, a calibration is required only in the range from the triple point of argon (83.805 8 K) to the triple point of water, then only the three calibration points in this range are needed, 83.805 8 K, 234.315 6 K (triple point of mercury) and 273.16 K. Similarly, in the range above 0 °C, a thermometer may be calibrated from 0 °C to 30 °C using just the triple point of water and melting point of gallium (29.764 6 °C). This last range offers the simplest possible way of achieving the highest accuracy thermometry in the room temperature range. It allows the user to avoid the trouble and expense of setting up calibration points at temperatures outside the range of interest, and in addition it allows the thermometer itself to be maintained under the best possible conditions by not requiring it to be heated significantly above the temperature of normal use. The price that is paid for this useful flexibility in the scale is the presence of a certain level of increased non-uniqueness compared with a scale having no overlapping ranges or sub-ranges. This is discussed in Section 3.2.

2.9. Provisional Low Temperature Scale from 0.9 mK to 1 K (PLTS-2000)

In October 2000, the CIPM adopted the PLTS-2000 [CIPM 2001]. It is based on noise and magnetic thermometry performed at three institutes [Rusby *et al* 2002, Fellmuth *et al* 2003]. Considering the uncertainty estimates for the thermometers used and thespread of the results obtained, the relative standard uncertainty of the PLTS-2000 in thermodynamic terms has been estimated to range from 2 % at 1 mK to 0.05 % at 1 K.

The PLTS-2000 is defined from 0.9 mK to 1 K by a polynomial with 13 terms describing the temperature dependence of the melting pressure of ^{3}He. Furthermore, four natural features on the ^{3}He melting curve can be used as intrinsic fixed points of temperature and pressure because their temperature and pressure values are also defined in the text of the PLTS-2000: the pressure minimum (315.24 mK, 2.931 13 mPa), the transition to the superfluid 'A' phase (2.444 mK, 3.434 07 mPa), the 'A to B' transition in the superfluid (1.896 mK, 3.436 09 mPa), and the Néel transition in the solid (0.902 mK, 3.439 34 mPa). The melting pressure of ^{3}He has been chosen as scale carrier for several reasons. First of all, it is a thermodynamic property of a pure substance; i.e., though impurities may have an influence, no principle non-uniqueness due to different interpolation behaviour of thermometers as for PRTs occurs. The melting pressure can be reproduced much better than the readings of all other thermometers and a temperature range of about three decades is covered. Furthermore, apart from a narrow range near the minimum of the melting curve, a high resolution down to 0.1 μK can be achieved. A *Guide to the realization of the PLTS-2000* is available on the BIPM website and published in [Rusby *et al* 2007].

2.10. ITS-XX

Applying ITS-90 for measuring temperatures means accepting several deficiencies of this scale. As a long-term task, the following changes of the scale are, from today's perspective, desirable in preparing a new scale ITS-XX (cf. Ripple *et al.* 2010, White and Rourke 2017):

- improvement of the approximation of thermodynamic temperature, see Section 2.2;
- merging of PLTS-2000 and ITS-90, e.g. by including PTB-2006;
- reduction of the non-uniqueness in the PRT sub-ranges (see below) by improving the quality criteria for PRTs, the reference and interpolation functions;
- replacement of high-temperature PRTs as interpolating instruments above the freezing point of aluminium because their instability is too large in this range;
- removing the intrinsic limitations of the ITS-90 above the silver freezing point [Machin *et al.* 2010], e.g., the increase of the uncertainty in proportion to the square of T_{90} above the fixed-point temperature;
- inclusion of high-temperature fixed points [Machin *et al.* 2010].

3. Numerical

3.1. Differences between scales

Differences between various International Temperatures Scales are shown graphically in Figure 2 to Figure 5. Differences $t_{48} - t_{27}$ exist only above 630 °C. They are smaller than the uncertainty of the great majority of temperature measurements carried out between 1927 and 1948. Thus, the 1948 change of temperature scale required little or no retroactive adjustments when comparing pre-1948 and post-1948 experimental work, and no analytic expressions for this are given here. In contrast, the differences $t_{68} - t_{48}$, $T_{76} - T_{68}$, $T_{90} - T_{76}$, and $T_{90} - T_{68}$ are substantially larger than the uncertainties quotedin the scientific literature of those periods, and numerical corrections are often necessary for comparisons of work before and after the transition dates.

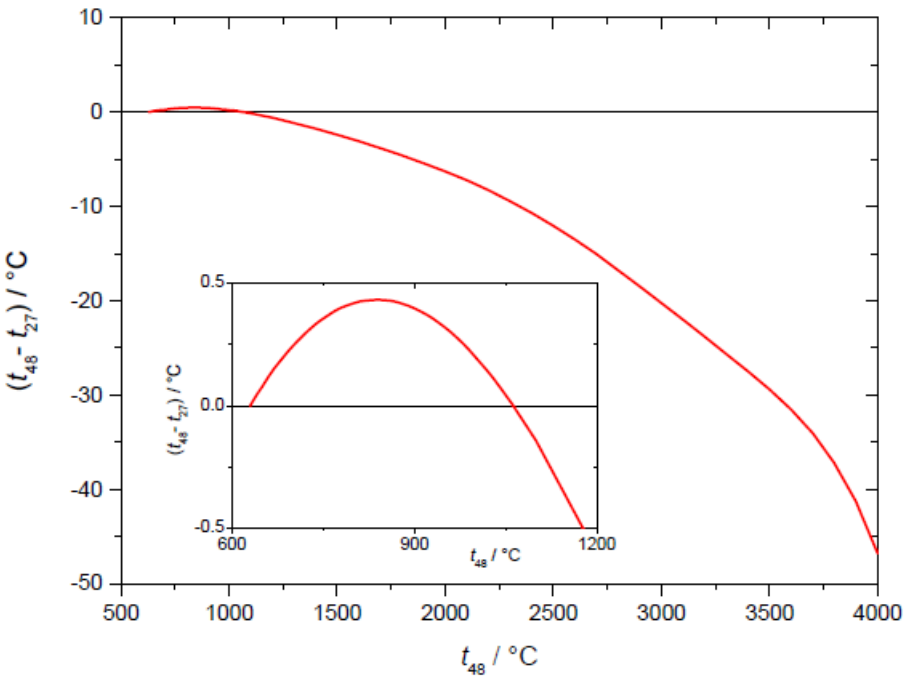

Figure 2 — The differences $t_{48} - t_{27}$ as a function of t_{48} (after [Hall 1955]).

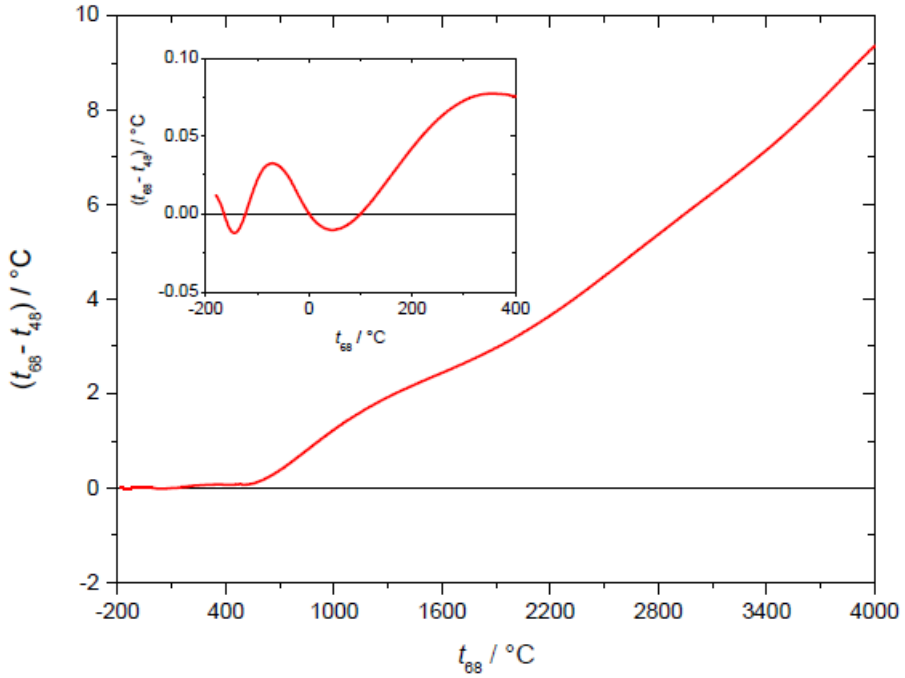

Figure 3 — The differences $t_{68} - t_{48}$ as a function of t_{68} [Bedford *et al.* 1970].

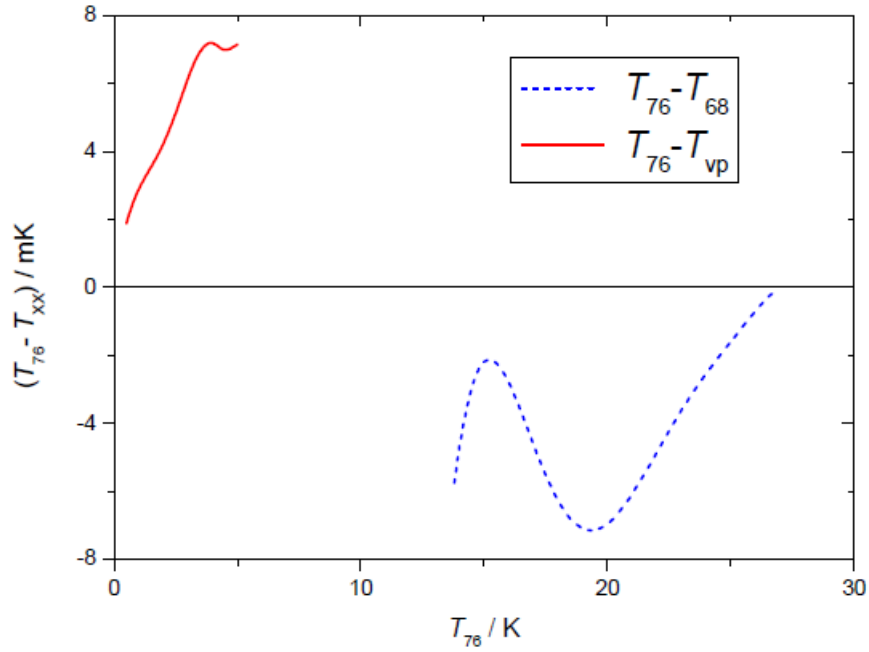

Figure 4 — The differences $T_{76} - T_{vp}$ ($T_{76} - T_{58} \approx T_{76} - T_{62}$ below $3.2\ \mathrm{K}$, $T_{76} - T_{58}$ from $3.2\ \mathrm{K}$ to $5\ \mathrm{K}$) and $T_{76} - T_{68}$ as a function of T_{76} (Tables 2 and 3 in [BIPM 1979]).

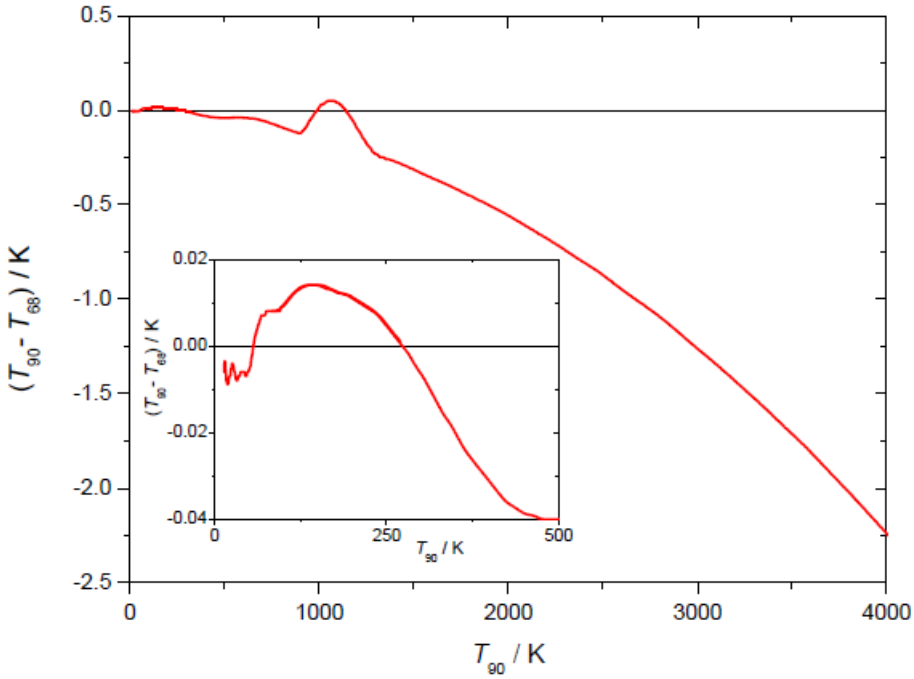

Figure 5 — The differences $T_{90} - T_{68}$ as a function of T_{90} (Table 1 in [Rusby *et al.* 1994]; Table 6 in [Preston-Thomas 1990] should not be used for the range from 630 °C to 1 064 °C).

The scale differences shown in Figure 2 to Figure 4 can be described analytically, with a maximum relative deviation of 10 %, by applying the following polynomials, the coefficients of which have been determined by fitting and are given in Table 2.

$$(t_{68} - t_{48})/°\mathrm{C} = \sum_{i=0}^{7} a_{i1} (t_{68}/°\mathrm{C})^{i}, \tag{1}$$

$$(T_{76} - T_{vp})/\mathrm{K} = \sum_{i=0}^{6} a_{i2} (T_{76}/\mathrm{K})^{i}, \tag{2}$$

$$(T_{76} - T_{68})/\mathrm{K} = \sum_{i=0}^{7} a_{i3} (T_{76}/\mathrm{K})^{i}. \tag{3}$$

Table 2. Values of the coefficients in Equation (1) to Equation (3).

Difference	$(t_{68} - t_{48})/°\mathrm{C}$			$(T_{76} - T_{vp})/\mathrm{K}$	$t_{76} - t_{68})/\mathrm{K}$
Coefficients	a_{i1}			a_{i2}	a_{i3}
Range	−180 °C to 0 °C	0 °C to 470 °C	470 °C to 4 000 °C	0.5 K to 5.0 K	13.8 K to 27 K
i					
0	$8.188\,411 \times 10^{-3}$	$2.834\,69 \times 10^{-4}$	$6.031\,724\,2 \times 10^{+0}$	$2.239\,12 \times 10^{-1}$	$2.983\,337\,8 \times 10^{+3}$
1	$9.722\,129 \times 10^{-4}$	$4.855\,23 \times 10^{-4}$	$3.270\,304\,1 \times 10^{-2}$	$3.910\,83 \times 10^{+0}$	$1.743\,224\,6 \times 10^{+3}$
2	$1.009\,974 \times 10^{-4}$	$6.059\,56 \times 10^{-6}$	$6.507\,868\,8 \times 10^{-5}$	$9.151\,69 \times 10^{-1}$	$6.547\,549\,1 \times 10^{+2}$

Difference	$(t_{68}-t_{48})/°C$	$(T_{76}-T_{vp})/K$	$t_{76}-t_{68})/K$
3	$2.952\,294 \times 10^{-6}$	$-8.174\,04 \times 10^{-9}$	$-6.023\,494\,9 \times 10^{-8}$	$-9.411\,46 \times 10^{-1}$	$-3.611\,503\,4 \times 10^{+1}$
4	$4.520\,372 \times 10^{-8}$	$-6.634\,54 \times 10^{-11}$	$3.042\,064\,3 \times 10^{-11}$	$7.855\,21 \times 10^{-1}$	$2.064\,765\,2 \times 10^{+0}$
5	$3.863\,623 \times 10^{-10}$	$3.112\,92 \times 10^{-13}$	$-8.534\,834\,7 \times 10^{-15}$	$-1.939\,25 \times 10^{-1}$	$-6.760\,423\,0 \times 10^{-2}$
6	$1.684\,889 \times 10^{-12}$	$-5.659\,93 \times 10^{-16}$	$1.250\,955\,7 \times 10^{-18}$	$1.554\,90 \times 10^{-2}$	$1.187\,410\,3 \times 10^{-3}$
7	$2.879\,618 \times 10^{-15}$	$3.981\,37 \times 10^{-19}$	$-7.470\,754\,3 \times 10^{-23}$		$-8.695\,835\,0 \times 10^{-6}$

The helium vapour-pressure equations for the ITS-90 are those originally derived for the EPT-76. Thus, in the range below $4.2\ \mathrm{K}$ (omitted in Table 6 of the text of the ITS-90) the differences $T_{90}-T_{76}$ can be considered to be zero kelvin. In the range from $4.2\ \mathrm{K}$ to $27\ \mathrm{K}$, the differences $T_{90}-T_{76}$ listed in this Table 6 were derived by applying the equation

$$(T_{90}-T_{76})/\mathrm{K} = -5.6 \times 10^{-6}(T_{90}/\mathrm{K})^2. \tag{4}$$

But since several methods of realizing the EPT-76 were approved, an uncertainty of at least a few tenths of a millikelvin has to be considered for comparisons of work done applying the two scales.

The polynomial representations of the differences between ITS-90 and IPTS-68 from $13.8\ \mathrm{K}$ to $903.8\ \mathrm{K}$ (630.6 °C) are due to R. L. Rusby [Rusby 1990] with the coefficients given in Table 3:

- from $13.8\ \mathrm{K}$ to $83.8\ \mathrm{K}$ (uncertainty approximately $1\ \mathrm{mK}$):

$$(T_{90}-T_{68})/\mathrm{K} = \sum_{i=0}^{12} b_{i1}((T_{90}-40\ \mathrm{K})/40\ \mathrm{K})^i, \tag{5}$$

- from $83.8\ \mathrm{K}$ to $903.8\ \mathrm{K}$ (630.6 °C) (uncertainty about $1.5\ \mathrm{mK}$ up to 0 °C, and $1\ \mathrm{mK}$ above 0 °C)

$$(t_{90}-t_{68})/°\mathrm{C} = \sum_{i=0}^{8} b_{i2}(t_{90}/630\ °\mathrm{C})^i. \tag{6}$$

For the range from 630 °C to 1 064 °C, revised values for $t_{90}-t_{68}$ have been published by Rusby *et al.* [Rusby *et al.* 1994] in Table 1, which are better estimates than the values listed in Table 6 of the text of the ITS-90 and are approximated by a polynomial of fifth order, the coefficients of which are also given in Table 3:

$$(t_{90}-t_{68})/°\mathrm{C} = \sum_{i=0}^{5} b_{i3}(t_{90}/°\mathrm{C})^i. \tag{7}$$

In this temperature range, the reproducibility of the IPTS-68 was limited to the level of about $(0.1-0.2)$ °C due to the use of the platinum10%rhodium-platinum thermocouple as the interpolating instrument. This limitation affected all measurements and scale comparisons involving the IPTS-68.

Table 3. Values of the coefficients in Equation (5) to Equation (7) describing the differences $T_{90}-T_{68}$ and $T_{90}-T_{68}$.

Coefficients	b_{i1}	b_{i2}	b_{i3}

Range	13.8 K to 83.8 K	83.8 K to 903.8 K	630 °C to 1 064 °C
i			
0	−0.005 903		$7.868\,720\,9 \times 10^{+1}$
1	0.008 174	−0.148 759	$-4.713\,599\,1 \times 10^{-1}$
2	−0.061 924	−0.267 408	$1.095\,471\,5 \times 10^{-3}$
3	−0.193 388	1.080 760	$-1.235\,788\,4 \times 10^{-6}$
4	1.490 793	1.269 056	$6.773\,658\,3 \times 10^{-10}$
5	1.252 347	−4.089 591	$-1.445\,808\,1 \times 10^{-13}$
6	−9.835 868	−1.871 251	
7	1.411 912	7.438 081	
8	25.277 595	−3.536 296	
9	−19.183 815		
10	−18.437 089		
11	27.000 895		
12	−8.716 324		

Above the gold freezing point (1 064.18 °C), the differences $T_{90} - T_{68}$ are only caused by the difference $\Delta T(\mathrm{Au}) = -0.25\ \mathrm{K}$ of the temperature values assigned in the two scales to this fixed point. The $T_{90} - T_{68}$ values listed in Table 6 of the text of the ITS-90 and shown in Figure 5 have been calculated for the domain, in which the Wien equation is a close approximation to the Planck equation, and for which a quadratic deviation function can be applied:

$$T_{90} - T_{68} = \Delta T(\mathrm{Au}) \left(\frac{T_{90}}{T_{90}(\mathrm{Au})} \right)^2. \tag{8}$$

This domain covers practically the entire visible region of the spectrum; i.e., the listed values apply with negligible error at wavelengths near $0.65\ \mu\mathrm{m}$ up to about 4 000 °C. At a wavelength of $1\ \mu\mathrm{m}$ and at higher temperatures, a wavelength dependence arising from the Planck equation (see Equation (15) of the text of the ITS-90) has to be considered.

The conversion of IPTS-68 PRT calibrations to ITS-90 is not straightforward. There are no simple analytical relations between the coefficients of ITS-90 and those of the IPTS-68. The conversion, therefore, consists of calculating the resistance ratios $W(T_{68}) = R(T_{68})/R(0\ ^\circ\mathrm{C})$ at the IPTS-68 values of the required ITS-90 fixed points,converting the ratios to $W(T_{90}) = R(T_{90})/R(0.01\ ^\circ\mathrm{C})$, by multiplying by 0.999 960 1, and applying the appropriate formula and temperature values as specified in the ITS-90.

For the triple points of neon and mercury, the melting point of gallium and the freezing point of indium, which were not defining fixed points of the IPTS-68, the values of T_{68} should be taken as 24.561 6 K, 234.308 2 K, 302.921 9 K, and 429.785 0 K, respectively [Rusby *et al.* 1991]. Where the IPTS-68 calibration used the condensation point of oxygen, rather than the triple point of argon, the T_{68} value most appropriately assigned to the argon point may differ slightly from the value 83.798 K specified in the IPTS-68. The freezing point of aluminium lay beyond the range of the PRT in the IPTS-68, but on extrapolating the IPTS-68 equations, its value was found to be 933.607 K [Bedford *et al.* 1984], although this could be in error by 5 mK or more.

3.2. Non-uniqueness

The irreproducibility of temperatures measured on the ITS-90 is caused by the dispersion due to deficiencies in the realization of the scale, the associated measurement instrumentation, and the so-called *non-uniqueness* of the scale [Mangum *et al.* 1997]. Three types of non-uniqueness can be identified:

- *Type 1* arises from the application of different interpolation equations inoverlapping ranges using the same thermometer,
- *Type 2* arises from the use of different kinds of thermometers in overlappingranges, and
- *Type 3* arises from the use of different interpolating thermometers of the same kind.

Types 1 and 2 are caused by the imperfect definition of the ITS-90, through errors in the thermodynamic temperature values assigned to the defining fixed points, and/or through scale equations that are not in agreement with the true thermodynamic equations of state. These deficiencies manifest themselves as non-uniqueness as soon as multiple definitions are allowed, as in the ITS-90. Type 3 is connected with deficiencies of the interpolating thermometers specified in the ITS-90. The thermometers, calibrated at a given set of defining fixed points, exhibit non-unique interpolation behaviour over the temperature ranges between the fixed points since they are not ideal, which implies, for example, that thermometers, albeit of the same kind, are not identical in their physical-chemical constitution. Since all realizations of the ITS-90 according to its definition are equally valid, the non-uniqueness determines fundamentally the lowest bounds for the uncertainty of measured temperatures on the ITS-90.

The estimation of the uncertainty caused by the non-uniqueness encounters the problem that it is not possible to make reliable theoretical estimates of the possible spread of the properties of the interpolating instruments due to different effects. For instance, though the requirements for accepting PRTs specified in the text of the ITS-90 are fulfilled, the platinum wires may be quite different with respect to crystal quality (grain size, concentrations of dislocations and vacancies), impurity content, and surface effects. Thus, experimental information is necessary, which of course cannot be comprehensive.

Only in the range from $0.65\ \mathrm{K}$ to $1.25\ \mathrm{K}$, there is principally no non-uniqueness because multiple definitions do not exist. The realization of the ITS-90 in the range from $1.25\ \mathrm{K}$ to $24.556\,1\ \mathrm{K}$ using vapour-pressure and interpolating constant-volume gas thermometry is treated in *Guide* Chapter 3 Vapour pressure scales and pressure measurement and Chapter 4 Gas Thermometry, respectively. The examples and estimates cited there yield non-uniqueness of the order of a few $0.1\ \mathrm{mK}$. Above $13.803\,3\ \mathrm{K}$, the uncertainty of the interpolation using PRTs also has to be considered. A collation of the experimental information on Type 1 and Type 3 non-uniqueness in the eleven PRT subranges between $13.803\,3\ \mathrm{K}$ and $1\,234.93\ \mathrm{K}$ is given in *Guide* Chapter 5 *Platinum resistance thermometry*. These two types of non-uniqueness contribute up to $0.5\ \mathrm{mK}$ or more to the uncertainty in the interpolated temperatures between fixed points. In most of the PRT subranges, this is a main or even the largest uncertainty component. (Results published in [Mangum *et al.* 1990] show that PRTs calibrated up to $1\,234.93\ \mathrm{K}$ should not be used below $692.677\ \mathrm{K}$ because the Type 1 non-uniqueness may amount to a few mK.) Above the freezing point of silver ($1\,234.93\ \mathrm{K}$), a Type 1 non-uniqueness results from the possibility of using three different fixed points for calibrating radiation thermometers. However, this is considered to be below the normal measurement uncertainty.

3.3. Propagation of uncertainty

For estimating the uncertainty of temperatures interpolated between fixed points, it is important to consider the propagation of the calibration uncertainty at the fixed points (see *Guide* Chapter 5 Platinum resistance thermometry and [White and Saunders 2007]). Depending on the particular interpolating functions and the calibration temperatures, the propagation may cause a significant increase of the uncertainty. For the interpolating constant-volume gas thermometer, this increase is estimated in *Guide* Chapter 4 *Gas Thermometry* to be of the order of a few 10 %. This order of magnitude is also valid for most of the eleven subranges, in which PRTs are used as interpolating instruments (see *Guide* Chapter 5 Platinum resistance thermometry). But in a few unfavourable cases, e.g. in the range between the triple points of argon ($83.805\,8\ \mathrm{K}$) and water ($0.01\ ^{\circ}\mathrm{C}$), the propagation may double the uncertainty at the fixed points.

References

[1] Bedford R E, Dauphinee T M and Preston-Thomas H (1970) *Temperature Measurement. Tools and Techniques in Physical Metallurgy*, ed. Weinberg F(Marcel Dekker, New York)

[2] Bedford R E, Bonnier G, Maas H and Pavese F (1984) *Metrologia* **20** 145-155 BIPM 1979 *Metrologia* **15** 65-68

[3] Brickwedde F G, van Dijk H, Durieux M, Clement J R and Logan J K 1960 *J. Res. NBS* **64A** 1-17

[4] CGPM (1889) *Comptes Rendus des Séances de la Première Conférence Générale des Poids et Mesures* 35 (This document and the following ones are available on requestfrom the BIPM.)

[5] CGPM (1927) *Comptes Rendus des Séances de la Septième Conférence Générale des Poids et Mesures* pp. 94-99

[6] CGPM (1948) *Comptes Rendus des Séances de la Neuvième Conférence Générale des Poids et Mesures* pp. 89-100

[7] CGPM (1960) *Comptes Rendus des Séances de la Onzième Conférence Générale des Poids et Mesures* pp. 124-133

[8] CGPM (1967/68) *Comptes Rendus des Séances de la Treizième Conférence Générale des Poids et Mesures* A1-A24

[9] CGPM (1975) *Comptes Rendus des Séances de la Quinzième Conférence Générale des Poids et Mesures* A1-A21

[10] CGPM (1987) *Comptes Rendus des Séances de la Dix-septième Conférence Générale des Poids et Mesures* pp. 67-69 and 101

[11] CIPM (1989) *Procès-Verbaux des Séances du Comité International des Poids et Mesures, 78th meeting*

[12] CIPM (2001) *Procès Verbaux des Séances du Comité International des Poids et Mesures* **89**(BIPM, Sèvres) pp. 128-130

[13] Durieux M, Astrov D N, Kemp W R G and Swenson C A (1979) *Metrologia* **15** 57-63 Engert J, Fellmuth B and Jousten K (2007) *Metrologia* **44** 40-52

[14] Fellmuth B, Hechtfischer D and Hoffmann A (2003) “PTB-96 The Ultra-Low Temperature Scale of PTB” *Proc. Temperature Its Measurement and Control in Science and Industry*, vol 7, ed. Ripple D C (Am. Inst. of Phys., New York) pp. 71-76

[15] Fellmuth B, Wolber L, Head D I, Hermier Y, Hill K D, Nakano T, Pavese F, Peruzzi A, Rusby R L, Shkraba V, Steele A G, Steur P P M, Szmyrka-Grzebyk A, Tew W L, Wang L and White D R (2012) *Metrologia* **49** 257-265

[16] Fellmuth B, Fischer J, Machin G, Picard S, Steur P P M, Tamura O, White D R, Yoon H (2016) *Phil. Trans. R. Soc.* **A 374**, 20150037, DOI: 10.1098/rsta.2015.0037

[17] Fischer J, Battuello M, Sadli M, Ballico M, Seung Nam Park, Saunders P, Yuan Zundong, Johnson B C, van der Ham E, Wang Li, Fumihiro Sakuma, Machin G, Fox

N, Ugur S and Matveyev M (2003) *CCT 22e Session, Doc. CCT/03-03* (This document is available on the BIPM website.)

[18] Fischer J, de Podesta M, Hill K D, Moldover M, Pitre L, Rusby R, Steur P, Tamura O, White R and Wolber L (2011) *Int. J. Thermophys.* **32** 12-25

[19] HallJ A (1955) "The International Temperature Scale" *Proc. Temperature Its Measurement and Control in Science and Industry*, vol 2, ed. Wolfe H C (ReinholdPublishing Corporation, New York) pp. 115-139

[20] Machin G, Anhalt K, Bloembergen P, Hartmann J, Saunders P, Woolliams E, Yamada Y and Yoon H (2010) "Realisation and dissemination of thermodynamic temperature above the silver point (1 234.93 K)" *CCT 25th Session, Doc. CCT/2010-12* (This document is available on request from the BIPM.)

[21] Mangum B W, Pfeiffer E R and Strouse G F (1990) "Non-uniqueness of some standard platinum resistance thermometers over the temperature range from 13.8 K to 1 235 K" *Proc. 4th Symposium on Temperature and Thermal Measurements in Industry and Science* (Finnish Society of Automatic Control, Helsinki) pp. 17-36

[22] Mangum B W, Bloembergen P, Chattle M V, Fellmuth B, Marcarino P and Pokhodun A I (1997) *Metrologia* **34** 427-429

[23] Mangum B W, Bloembergen P, Chattle M V, Fellmuth B, Marcarino P and Pokhodun A I (1999) *Metrologia* **36** 79-88

[24] Mangum B W, Bloembergen P, Chattle M V, Fellmuth B, Marcarino P and Pokhodun A I (2000) "Optimal realization of the defining fixed points of the ITS-90 that are used for contact thermometry" *CCT 20e Session, Doc. CCT/2000-13* (This document is available on request from the BIPM.)

[25] Mangum B W, Strouse G F, Guthrie W F, Pello R, Stock M, Renaot E, Hermier Y, Bonnier G, Marcarino P, Gam K S, Kang K H, Kim Y G, Nicholas J V, White D R, Dransfield T D, Duan Y, Qu Y, Connolly J, Rusby R L, Gray J, Sutton G J M, Head. I, Hill K D, Steele A, Nara K, Tegeler E, Noatsch U, Heyer D, Fellmuth B, Thiele-Krivoj B, Duris S, Pokhodun A I, Moiseeva N P, Ivanova A G, de Groot M J and Dubbeldam J F (2002) *Metrologia* **39** 179-205

[26] Nubbemeyer H G and Fischer J (2002) *Metrologia* **39** 03001

[27] Pfeiffer E R and Kaeser R S (1982) "Realization of the 1976 Provisional 0.5 K to 30 K Temperature Scale at the National Bureau of Standards" *Proc. Temperature Its Measurement and Control in Science and Industry*, vol 5, ed. Schooley J F (Am.Inst. of Phys., New York) 159-167

[28] Preston-Thomas H (1976) *Metrologia* **12** 7-17

[29] Preston-Thomas H (1990) *Metrologia* **27** 3-10 and 107

[30] Quinn T J (1990) Temperature, 2nd edition (Academic Press, London)

[31] Ripple D C, Davis R, Fellmuth B, Fischer J, Machin G, Quinn T, Steur P, Tamura O and White D R (2010) *Int. J. Thermophys.* **31** 1795-1808

[32] Rusby R L (1990) *Private communication*

[33] Rusby R L, Hudson R P, Durieux M, Schooley J F, Steur P P M and Swenson C A (1991) *Metrologia* **28** 9-18

[34] Rusby R L, Hudson R P and Durieux M (1994) *Metrologia* **31** 149-153

[35] Rusby R L, Durieux M, Reesink A L, Hudson R P, Schuster G, Kühne M, Fogle W E, Soulen R J and Adams E D (2002) *J. Low Temp. Phys*. **126** 633-642

[36] Rusby R L, Fellmuth B, Engert J, Fogle W E, Adams E D, Pitre L and Durieux M (2007) *J. Low Temp. Phys*. **149** 156-175

[37] Sydoriak S G, Sherman R H and Roberts T R (1964) *J. Res. NBS* **68A** 547-588 White D R and Saunders P (2007) *Meas. Sci. & Technol.* **18** 2157-2169

[38] White D R and Rourke P M C (2017) "Towards ITS-XX" *CCT 28th Session, Doc. CCT/17-17* (This document is available on request from the BIPM.)