FINAL
DRAFT

INTERNATIONAL STANDARD

ISO/FDIS 17301-1

ISO/TC **34**

Secretariat: SAC

Voting begins on:
YYYY-MM-DD

Voting terminates on:
YYYY-MM-DD

Cereals and pulses — Specifications and test methods —

Part 1:
Rice (FDIS)

Céréales et légumineuses — Spécification et méthodes d'essai — Partie 1:Riz (FDIS)

RECIPIENTS OF THIS DRAFT ARE INVITED TO SUBMIT, WITH THEIR COMMENTS, NOTIFICATION OF ANY RELEVANT PATENT RIGHTS OF WHICH THEY ARE AWARE AND TO PROVIDE SUPPORTING DOCUMENTATION.

IN ADDITION TO THEIR EVALUATION AS BEING ACCEPTABLE FOR INDUSTRIAL, TECHNOLOGICAL, COMMERCIAL AND USER PURPOSES, DRAFT INTERNATIONAL STANDARDS MAY ON OCCASION HAVE TO BE CONSIDERED IN THE LIGHT OF THEIR POTENTIAL TO BECOME STANDARDS TO WHICH REFERENCE MAY BE MADE IN NATIONAL REGULATIONS.

Reference Number
ISO/FDIS 17301-1:2016(E)

© ISO 2016

COPYRIGHT PROTECTED DOCUMENT

© ISO 2016

All rights reserved. Unless otherwise specified, no part of this publication may be reproduced or utilized otherwise in any form or by any means, electronic or mechanical, including photocopying, or posting on the internet or an intranet, without prior written permission. Permission can be requested from either ISO at the address below or ISO's member body in the country of the requester.

ISO copyright office
Ch. de Blandonnet 8 • CP 401
CH-1214 Vernier, Geneva, Switzerland
Tel. + 41 22 749 01 11
Fax + 41 22 749 09 47
Email: copyright@iso.org
Website: www.iso.org

Published in Switzerland

Contents

Page

Foreword ... **iv**
Introduction ... **v**
1 Scope ... **1**
2 Normative references ... **1**
3 Terms and definitions ... **1**
4 Specifications ... **3**
4.1 General, organoleptic and health characteristics ... 3
4.2 Physical and chemical characteristics ... 3
5 Sampling ... **5**
6 Test methods ... **5**
6.1 Moisture content ... 5
6.2 Waxy rice content ... 5
6.3 Nitrogen content and crude protein content ... 5
6.4 Gelatinization time ... 5
6.5 Husked rice yield ... 5
6.5.1 Determination ... 5
6.5.2 Precision ... 5
7 Test report ... **6**
8 Packaging ... **6**
9 Marking ... **6**
Annex A (normative) **Determination of defects** ... 7
Annex B (informative) **Determination of the waxy rice content of parboiled rice** ... 9
Annex C (informative) **Gelatinization** ... 11
Annex D (informative) **Results of interlaboratory test for husked rice yields** ... 13
Annex E (informative) **Extraneous information** ... 14
Bibliography ... **15**

© ISO 2016 – All rights reserved

Foreword

ISO (the International Organization for Standardization) is a worldwide federation of national standards bodies (ISO member bodies). The work of preparing International Standards is normally carried out through ISO technical committees. Each member body interested in a subject for which a technical committee has been established has the right to be represented on that committee. International organizations, governmental and non-governmental, in liaison with ISO, also take part in the work. ISO collaborates closely with the International Electrotechnical Commission (IEC) on all matters of electrotechnical standardization.

The procedures used to develop this document and those intended for its further maintenance are described in the ISO/IEC Directives, Part 1. In particular the different approval criteria needed for the different types of ISO documents should be noted. This document was drafted in accordance with the editorial rules of the ISO/IEC Directives, Part 2 (see www.iso.org/directives).

Attention is drawn to the possibility that some of the elements of this document may be the subject of patent rights. ISO shall not be held responsible for identifying any or all such patent rights. Details of any patent rights identified during the development of the document will be in the Introduction and/or on the ISO list of patent declarations received (see www.iso.org/patents).

Any trade name used in this document is information given for the convenience of users and does not constitute an endorsement.

For an explanation on the voluntary nature of standards, the meaning of ISO specific terms and expressions related to conformity assessment, as well as information about ISO's adherence to the World Trade Organization (WTO) principles in the Technical Barriers to Trade (TBT) see the following URL: www.iso.org/iso/foreword.html.

This document was prepared by Technical Committee ISO/TC 34, *Food products*, Subcommittee SC 4, *Cereals and pulses*.

This second edition cancels and replaces the first edition (ISO 17301-1:2009), which has been technically revised.

The main changes compared to the previous edition are:

— updated normative references;

— deletion of 4.3.

A list of all parts in the ISO 17301 series can be found on the ISO website.

© ISO 2016 – All rights reserved

Introduction

This document was developed in response to worldwide demand for minimum specifications for rice traded internationally, since most commercial bulks of grain, which have not been screened or aspirated, contain a proportion of other grains, weed seeds, chaff, straw, stones, sand, etc. The vegetable materials can have physical and biological properties which differ from those of the main constituent and can therefore affect the storage behaviour.

Rice is a permanent host to a considerable microflora; most of these microorganisms are cosmopolitan, the majority are innocuous, but some produce harmful by-products. Microflora communities present on freshly harvested rice include many types of bacteria, moulds and yeasts. While the rice is ripening and its moisture content is falling, the number of field microorganisms, mainly bacteria, diminishes. When the rice is harvested, it is invaded by storage microorganisms and the field microflora gradually dies out. If the mass fraction of moisture (formerly expressed as moisture content) is less than 18 %, the microflora does not multiply, whereas above 18 % it does so rapidly. Thus, at harvest, the qualitative and the quantitative composition of the microflora depends more upon ecological factors than upon the variety of the rice. During transport and storage, additions to the microfloral population occur. Microorganisms on the rice at harvest tend to die out during storage and are replaced by microorganisms adapted to storage conditions.

Storage losses have been estimated as being an average of 5 %, and as much as 30 %, especially in countries with climates favourable to the rapid development of agents of deterioration and where storage techniques are poorly developed, such as developing countries in the damp tropics. The magnitude of these figures highlights the need to promote throughout the world a rapid improvement in techniques of conservation.

The International Organization for Standardization (ISO) draws attention to the fact that it is claimed that compliance with this document may involve the use of a patent concerning sample dividers given in Annex A and shown in Figure A.1.

ISO takes no position concerning the evidence, validity and scope of this patent right.

The holder of this patent right has assured ISO that he/she is willing to negotiate licences under reasonable and non-discriminatory terms and conditions with applicants throughout the world. In this respect, the statement of the holder of this patent right is registered with ISO. Information may be obtained from:

Vache Equipment
Fictitious
World
gehf@vacheequipment.fic

Attention is drawn to the possibility that some of the elements of this document may be the subject of patent rights other than those identified above. ISO shall not be held responsible for identifying any or all such patent rights.

© ISO 2016 – All rights reserved

Cereals and pulses — Specifications and test methods —

Part 1:
Rice (FDIS)

1 Scope

This document specifies minimum requirements and test methods for rice (*Oryza sativa L.*).

It is applicable to husked rice, husked parboiled rice, milled rice and milled parboiled rice, suitable for human consumption, directly or after reconditioning.

It is not applicable to cooked rice products.

2 Normative references

The following documents are referred to in the text in such a way that some or all of their content constitutes requirements of this document. For dated references, only the edition cited applies. For undated references, the latest edition of the referenced document (including any amendments) applies.

ISO 712 (all parts), *Cereals and cereal products – Determination of moisture content*

ISO 6646 (all parts), *Rice – Determination of the potential milling yield from paddy and from husked rice*

ISO 8351-1:1994, *Packaging — Method of specification for sacks — Part 1: Paper sacks*

ISO 8351-2, *Packaging — Method of specification for sacks — Part 2: Sacks made from thermoplastic flexible film*

ISO 16634:[1)], *Cereals, pulses, milled cereal products, oilseeds and animal feeding stuffs — Determination of the total nitrogen content by combustion according to the Dumas principle and calculation of the crude protein content*

ISO 20483:2013, *Cereals and pulses — Determination of the nitrogen content and calculation of the crude protein content — Kjeldahl method*

ISO 24333:2009, *Cereals and cereal products — Sampling*

3 Terms and definitions

For the purposes of this document, the following terms and definitions apply.

ISO and IEC maintain terminological databases for use in standardization at the following addresses:

— ISO Online browsing platform: available at http://www.iso.org/obp

— IEC Electropedia: available at http://www.electropedia.org

3.1
paddy
paddy rice
rough rice
rice retaining its husk after threshing

1) Under preparation. (Stage at the time of publication ISO/DIS 16634)

© ISO 2016 – All rights reserved

[SOURCE: ISO 7301:2011, 3.1]

3.2
husked rice
DEPRECATED: cargo rice
paddy (3.1) from which the husk only has been removed

[SOURCE: ISO 7301:2011, 3.2, modified — The term “cargo rice” is shown as deprecated, and Note 1 to entry is not included here]

3.3
milled rice
white rice
husked rice (3.2) from which almost all of the bran and embryo have been removed by milling

[SOURCE: ISO 7301:2011, 3.3]

3.4
parboiled rice
rice whose starch has been fully gelatinized by soaking paddy rice or husked rice in water followed by a heat treatment and a drying process

3.5
waxy rice
variety of rice whose kernels have a white and opaque appearance

Note 1 to entry: The starch of waxy rice consists almost entirely of amylopectin. The kernels have a tendency to stick together after cooking.

3.6
extraneous matter
EM
<rice> organic and inorganic components other than whole or broken kernels

EXAMPLE Foreign seeds, husks, bran, sand, dust.

3.7
HDK
heat-damaged kernel
kernel, whole or broken, which has changed its normal colour as a result of heating

Note 1 to entry: This category includes whole or broken kernels that are yellow due to alteration. Parboiled rice in a batch of non-parboiled rice is also included in this category.

3.8
damaged kernel
kernel, whole or broken, showing obvious deterioration due to moisture, pests, disease or other causes, but excluding *HDK* (3.7)

3.9
immature kernel
unripe kernel
kernel, whole or broken, which is unripe and/or underdeveloped

3.10
husked rice yield
amount of husked rice obtained from paddy

[SOURCE: ISO 6646, 3.1]

© ISO 2016 – All rights reserved

3.11
nitrogen content
quantity of nitrogen determined after application of the procedure described

Note 1 to entry: It is expressed as a mass fraction of dry product, as a percentage.

[SOURCE: ISO 20483:2013, 3.1]

3.12
crude protein content
quantity of crude protein obtained from the nitrogen content as determined by applying the specified method, calculated by multiplying this content by an appropriate factor depending on the type of cereal or pulse

Note 1 to entry: It is expressed as a mass fraction of dry product, as a percentage.

[SOURCE: ISO 20483:2013, 3.2]

3.13
gelatinization
hydration process conferring the jelly-like state typical of the coagulated colloids, which are named “gels”, on kernels

Note 1 to entry: See Figure C.1.

[SOURCE: ISO 14864:1998, 3.1]

3.14
gel state
condition reached as a consequence of *gelatinization* (3.13), when the kernel is fully transparent and absolutely free from whitish and opaque granules after being pressed between two glass sheets

[SOURCE: ISO 14864:1998, 3.2]

3.15
gelatinization time
t_{90}
time necessary for 90 % of the kernels to pass from their natural state to the *gel state* (3.14)

[SOURCE: ISO 14864:1998, 3.3]

4 Specifications

4.1 General, organoleptic and health characteristics

Kernels of rice, whether parboiled, husked or milled, and whether whole or broken, shall be sound, clean and free from foreign odours or odour which indicates deterioration.

The levels of additives and pesticide residues and other contaminants shall not exceed the maximum limits permitted in the country of destination.

The presence of living insects which are visible to the naked eye is not permitted. This should be determined before separating the bulk sample into test samples.

4.2 Physical and chemical characteristics

4.2.1 The mass fraction of moisture, determined in accordance with ISO 712, using an oven complying with the requirements of IEC 61010-2:1998, shall not be greater than 15 %.[2)]

2) Formerly denoted as 15 % (m/m).

© ISO 2016 – All rights reserved

The mass fraction of extraneous matter and defective kernels in husked and milled rice, whether or not parboiled, determined in accordance with Annex A, shall not be greater than the values specified in Table 1.

NOTE Lower mass fractions of moisture are sometimes needed for certain destinations depending on the climate, duration of transport and storage. For further details, see ISO 6322-1, ISO 6322-2 and ISO 6322-3.

4.2.2 The defect tolerance for the categories considered, and determined in accordance with the method given in Annex A, shall not exceed the limits given in Table 1.

Table 1 — Maximum permissible mass fraction of defects

Defect	Maximum permissible mass fraction of defects in husked rice w_{max} %			
	in husked rice	in milled rice (non-glutinous)	in husked parboiled rice	in milled parboiled rice
Extraneous matter: organic[a]	1,0	0,5	1,0	0,5
Extraneous matter: inorganic[b]	0,5	0,5	0,5	0,5
Paddy	2,5	0,3	2,5	0,3
Husked rice, non-parboiled	Not applicable	1,0	1,0	1,0
Milled rice, non-parboiled	1,0	Not applicable	1,0	1,0
Husked rice, parboiled	1,0	1,0	Not applicable	1,0
Milled rice, parboiled	1,0	1,0	1,0	Not applicable
Chips	0,1	0,1	0,1	0,1
HDK	2,0[c]	2,0	2,0[c]	2,0
Damaged kernels	4,0	3,0	4,0	3,0
Immature and/or malformed kernels	8,0	2,0	8,0	2,0
Chalky kernels	5,0[c]	5,0	Not applicable	Not applicable
Red kernels and red-streaked kernels	12,0	12,0	12,0[c]	12,0
Partly gelatinized kernels	Not applicable	Not applicable	11,0[c]	11,0
Pecks	Not applicable	Not applicable	4,0	2,0
Waxy rice	1,0[c]	1,0	1,0[c]	1,0

Live insects shall not be present. Dead insects shall be included in extraneous matter.

NOTE 1 This table is based on ISO 7301:2011, Table 1.

NOTE 2 Some commercial contracts require information in addition to that provided in this table.

NOTE 3 Only full red husked (cargo) rice is considered in this table.

a Organic extraneous matter includes foreign seeds, husks, bran, parts of straw, etc.

b Inorganic extraneous matter includes stones, sand, dust, etc.

c The maximum permissible mass fraction of defects shall be determined with respect to the mass fraction obtained after milling.

© ISO 2016 – All rights reserved

5 Sampling

Sampling shall be carried out in accordance with ISO 24333:2009, Clause 5.

6 Test methods

6.1 Moisture content

Determine the mass fraction of moisture in accordance with the method specified in ISO 712.

6.2 Waxy rice content

Determine the mass fraction of waxy rice. Annex B gives an example of a suitable method.

6.3 Nitrogen content and crude protein content

Determine the nitrogen content and crude protein content in accordance with either ISO 16634:--, Clause 9[3)], or ISO 20483:2013. For details on the determination of protein content using the Kjeldahl method, see Reference [10] in the Bibliography. For details concerning the use of the Dumas method, see References [15] and [16].

Calculate the crude protein content of the dry product by multiplying the value of the nitrogen content by the conversion factor specified in ISO 20483:2013, Annex C and Table C.1, that is adapted to the type of cereals or pulses [11][12] and to their use.

6.4 Gelatinization time

Determine the gelatinization time, t_{90}, for rice kernels during cooking. An example of a typical curve is given in Figure C.1. Three typical stages of gelatinization are shown in Figure C.2.

Report the results as specified in Clause 7.

6.5 Husked rice yield

6.5.1 Determination

CAUTION — Only use paddy or parboiled rice for the determination of husked rice yield.

Determine the husked rice yield in accordance with ISO 6646.

6.5.2 Precision

6.5.2.1 Interlaboratory test

The results of an interlaboratory test are given in Annex D for information

6.5.2.2 Repeatability

The absolute difference between two independent single test results, obtained using the same method on identical test material in the same laboratory by the same operator using the same equipment within a short interval of time, shall not exceed the arithmetic mean of the values for r obtained from the interlaboratory study for husked rice in more than 5 % of cases:

$$r = 1\%$$

3)

© ISO 2016 – All rights reserved

where r is the repeatability limit.

6.5.2.3 Reproducibility

The absolute difference between two single test results, obtained using the same method on identical test material in different laboratories by different operators using different equipment, shall not exceed the arithmetic mean of the values for R obtained from the interlaboratory study in more than 5 % of cases:

$$R = 3\%$$

where R is the reproducibility limit.

7 Test report

For each test method, the test report shall specify the following:

a) all information necessary for the complete identification of the sample;

b) a reference to this document (i.e. ISO 17301-1);

c) the sampling method used;

d) the test method used;

e) the test result(s) obtained or, if the repeatability has been checked, the final quoted result obtained;

f) all operating details not specified in this document, or regarded as optional, together with details of any incidents which may have influenced the test result(s);

g) any unusual features (anomalies) observed during the test;

h) the date of the test.

8 Packaging

The packaging shall not transmit any odour or flavour to the product and shall not contain substances which may damage the product or constitute a health risk.

If bags are used, they shall comply with the requirements of ISO 8351-1:1994, Clause 9, or ISO 8351-2, as appropriate.

9 Marking

The packages shall be marked or labelled as required by the country of destination.

© ISO 2016 – All rights reserved

Annex A
(normative)

Determination of defects

A.1 Principle

Extraneous matter, broken kernels, damaged kernels and other kinds of rice are separated manually according to the following types: husked rice, milled rice, husked parboiled rice and milled parboiled rice. Each type is then weighed.

A.2 Apparatus

The usual laboratory apparatus and, in particular, the following.

A.2.1 Sample divider, consisting of a conical sample divider or multiple-slot sample divider with a distribution system, e.g. “Split-it-right” sample divider, such as that shown in Figure A.1.

A.2.2 Sieve, with round perforations of diameter 1,4 mm.

A.2.3 Tweezers.

A.2.4 Scalpel.

A.2.5 Paintbrush.

A.2.6 Steel bowls, of diameter 100 mm ± 5 mm; seven per test sample.

A.2.7 Balance, which can be read to the nearest 0,01 g.

A.3 Sampling

See Clause 5.

A.4 Procedure

A.4.1 Preparation of test sample

Carefully mix the laboratory sample to make it as uniform as possible, then proceed to reduce it, using a divider (A.2.1), until a quantity of about 30 g is obtained.

All parts of kernels which get stuck in the perforations of a sieve should be considered to be retained by the sieve.

© ISO 2016 – All rights reserved

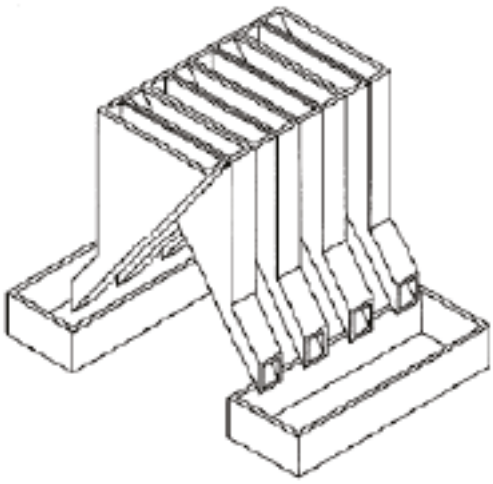

Figure A.1 — Split-it-right sample divider

A.5 Determination

Weigh, to the nearest 0,1 g, one of the test samples obtained in accordance with A.4.1 and separate the different defects into the bowls (A.2.6). When a kernel has several defects, classify it in the defect category for which the maximum permissible value is the lowest (see Table 1).

Weigh, to the nearest 0,01 g, the fractions so obtained.

A.6 Calculation

Express the mass fraction of each defect using Formula (A.1):

$$w = \frac{m_D}{m_S} \tag{A.1}$$

where

w is the mass fraction of grains with a particular defect in the test sample;

m_D is the mass, in grams, of grains with that defect;

m_S is the mass, in grams, of the test sample.

A.7 Test report

Report the results as specified in Clause 7.

© ISO 2016 – All rights reserved

Annex B
(informative)

Determination of the waxy rice content of parboiled rice

B.1 Principle

Waxy rice kernels have a reddish brown colour when stained in an iodine solution, while non-waxy rice kernels show a dark blue colour.

B.2 Apparatus

The usual laboratory apparatus and, in particular, the following.

B.2.1 Balance, capable of weighing to the nearest 0,01 g.

B.2.2 Glass beaker, of capacity 250 ml.

B.2.3 Small white colour bowls, or any white colour container of a suitable size.

B.2.4 Wire sieve, with long rounded apertures of (1 mm $^{+0.02}_{0}$ mm) × (20 mm $^{+2}_{-1}$ mm).

B.2.5 Stirrer rod.

B.2.6 Tweezers or forceps.

B.2.7 Tissue paper.

B.3 Reagents

WARNING — Direct contact of iodine with skin can cause lesions so care should be taken in handling iodine. Iodine vapour is very irritating to eyes and mucous membranes.

B.3.1 Deionized water, Grade 3 quality as specified in ISO 3696:1987.

B.3.2 Iodine stock solution, containing a mass fraction of 4,1 % iodine and 6,3 % potassium iodide in deionized water such as Lugols.[4)]

B.3.3 Iodine working solution, obtained by diluting the stock solution (B.3.2) two times (by volume) with deionized water (B.3.1).

Prepare fresh daily.

4) Lugols is an example of a suitable product available commercially. This information is given for the convenience of users of this document and does not constitute an endorsement by ISO of this product.

© ISO 2016 – All rights reserved

B.4 Sampling

Sampling shall be carried out in accordance with Clause 5.

B.5 Determination

B.5.1 Weigh a portion of about 100 g of milled rice and put it into a glass beaker (B.2.2).

B.5.2 Add enough iodine working solution (B.3.3) to soak the kernels, and stir (B.2.5) until all the kernels are submerged under the solution. Let the kernels soak in the solution for 30 s.

B.5.3 Pour the rice and solution into a wire sieve (B.2.4), and shake the basket slightly in order to drain out the solution. Then place the wire sieve on a piece of tissue paper (B.2.7) to absorb the excess liquid.

B.5.4 Pour the stained kernels into a bowl (B.2.3). Using tweezers or forceps (B.2.6), separate the reddish brown kernels of waxy rice from the dark blue kernels of non-waxy rice.

B.5.5 Weigh the waxy rice portion (m_1) and the non-waxy rice portion (m_2) to the nearest 0,1 g.

B.6 Calculation

Calculate the mass fraction, expressed as a percentage, of the waxy rice, w_{wax}, using Formula (B.1):

$$w_{wax} = \frac{m_1}{m_1 + m_2} \times 100 \qquad \text{(B.1)}$$

where

m_1 is the mass, expressed in grams, of the waxy rice portion;

m_2 is the mass, expressed in grams, of the non-waxy rice portion.

B.7 Test report

Report the results as specified in Clause 7, giving the results calculated using B.6, Formula (B.1).

© ISO 2016 – All rights reserved

Annex C
(informative)

Gelatinization

Figure C.1 gives an example of a typical gelatinization curve. Figure C.2 shows the three stages of gelatinization.

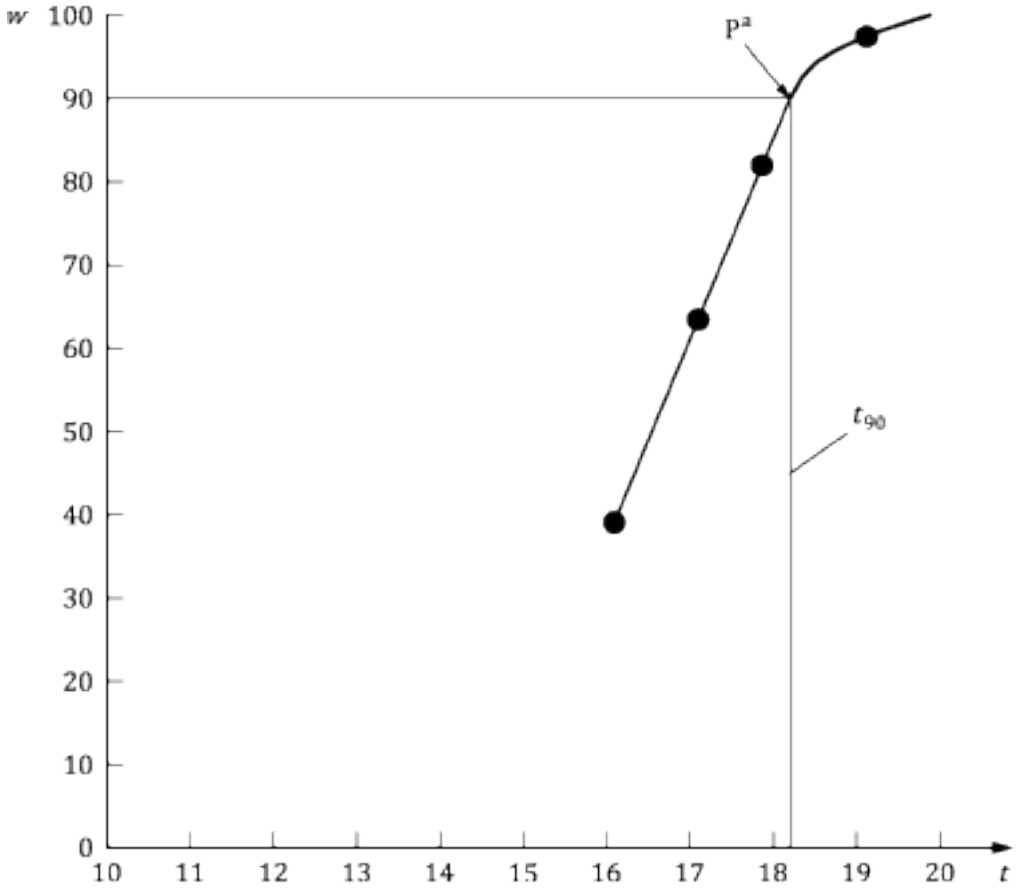

Key

w	mass fraction of gelatinized kernels, expressed in per cent
t	cooking time, expressed in minutes
t_{90}	time required to gelatinize 90 % of the kernels
P	point of the curve corresponding to a cooking time of t_{90}
a	The time t_{90} was estimated to be 18,2 min for this example.

NOTE These results are based on a study carried out on three different types of kernel.

Figure C.1 — Typical gelatinization curve

© ISO 2016 – All rights reserved

a) Initial stages: No grains are fully gelatinized (ungelatinized starch granules are visible inside the kernels)

b) Intermediate stages: Some fully gelatinized kernels are visible

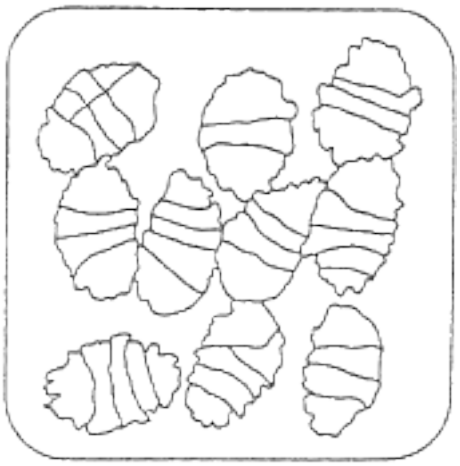

c) Final stages: All kernels are fully gelatinized

Figure C.2 — Stages of gelatinization

© ISO 2016 – All rights reserved

Annex D
(informative)

Results of interlaboratory test for husked rice yields

An interlaboratory test [14] was carried out by the ENR [Rice Research Centre (Italy)] in accordance with ISO 5725-1 and ISO 5725-2, with the participation of 15 laboratories. Each laboratory carried out three determinations on four different types of kernel. The statistical results are shown in Table D.1.

Table D.1 — Repeatability and reproducibility of husked rice yield

Description	Rice sample			
	Arborio	Dragoa	Balilla	Thaibonnet
Number of laboratories retained after eliminating outliers	13	11	13	13
Mean value, g/100 g	81,2	82,0	81,8	77,7
Standard deviation of repeatability, s_r, g/100 g	0,41	0,15	0,31	0,53
Coefficient of variation of repeatability, %	0,5	0,2	0,4	0,7
Repeatability limit, r (= 2,83 s_r)	1,16	0,42	0,88	1,50
Standard deviation of reproducibility, s_R, g/100 g	1,02	0,20	0,80	2,14
Coefficient of variation of reproducibility, %	1,3	0,2	1,0	2,7
Reproducibility limit, R (= 2,83 s_R)	2,89	0,57	2,26	6,06

a Parboiled rice.

© ISO 2016 – All rights reserved

Annex E
(informative)

Extraneous information

This appendix is not in the original Rice model document, and is inserted to illustrate elements absent from that document: block quotes, source code, and examples.

> This International Standard gives the minimum specifications for rice (*Oryza sativa* L.) which is subject to international trade. It is applicable to the following types: husked rice and milled rice, parboiled or not, intended for direct human consumption. It is neither applicable to other products derived from rice, nor to waxy rice (glutinous rice).
>
> — ISO, ISO 7301:2011, Clause 1

Appendix 1 Sample code

EXAMPLE — Sample Code

```
puts "Hello, world."
%w{a b c}.each do |x| <1>
  puts x
end

<1> This is an annotation
```


© ISO 2016 – All rights reserved

Bibliography

[1] ISO 3696:1987, *Water for analytical laboratory use — Specification and test methods*

[2] ISO 5725-1, *Accuracy (trueness and precision) of measurement methods and results — Part 1: General principles and definitions*

[3] ISO 5725-2, *Accuracy (trueness and precision) of measurement methods and results — Part 2: Basic method for the determination of repeatability and reproducibility of a standard measurement method*

[4] ISO 6322-1, *Storage of cereals and pulses — Part 1: General recommendations for the keeping of cereals*

[5] ISO 6322-2, *Storage of cereals and pulses — Part 2: Practical recommendations*

[6] ISO 6322-3, *Storage of cereals and pulses — Part 3: Control of attack by pests*

[7] ISO 7301:2011, *Rice — Specification*

[8] ISO 14864:1998, *Rice — Evaluation of gelatinization time of kernels during cooking*

[9] IEC 61010-2:1998, *Safety requirements for electric equipment for measurement, control, and laboratory use — Part 2: Particular requirements for laboratory equipment for the heating of material*

[10] Berner D.L., & Brown J. Protein nitrogen combustion method collaborative study I. Comparison with Smalley total Kjeldahl nitrogen and combustion results. *J. Am. Oil Chem. Soc.* 1994, **71** (11) pp 1291-1293

[11] Buckee G.K. Determination of total nitrogen in barley, malt and beer by Kjeldahl procedures and the Dumas combustion method — Collaborative trial. *J. Inst. Brew.* 1994, **100** (2) pp 57-64

[12] Frister H. *Direct determination of nitrogen content by Dumas analysis; Interlaboratory study on precision characteristics*. AOAC International, Europe Section 4th International Symposium, Nyon, Switzerland, 1994, 33 pp

[13] Nitrogen-ammonia-protein modified Kjeldahl method — Titanium oxide and copper sulfate catalyst. *Official Methods and Recommended Practices of the AOCS* (ed. Firestone, D.E.), AOCS Official Method Ba Ai 4-91, 1997, AOCS Press, Champaign, IL

[14] Ranghino F. Evaluation of rice resistance to cooking, based on the gelatinization time of kernels. *Il Riso*. 1966, **XV** pp 117-127

[15] Standard No I.C.C 167. *Determination of the protein content in cereal and cereal products for food and animal feeding stuffs according to the Dumas combustion method* (see http://www.icc.or.at)

[16] Tkachuk R. Nitrogen-to-protein conversion factors for cereals and oilseed meals. *Cereal Chem.* 1969, **46** (4) pp 419-423

© ISO 2016 – All rights reserved

ICS 67.060
Price based on 15 pages

© ISO 2016 – All rights reserved