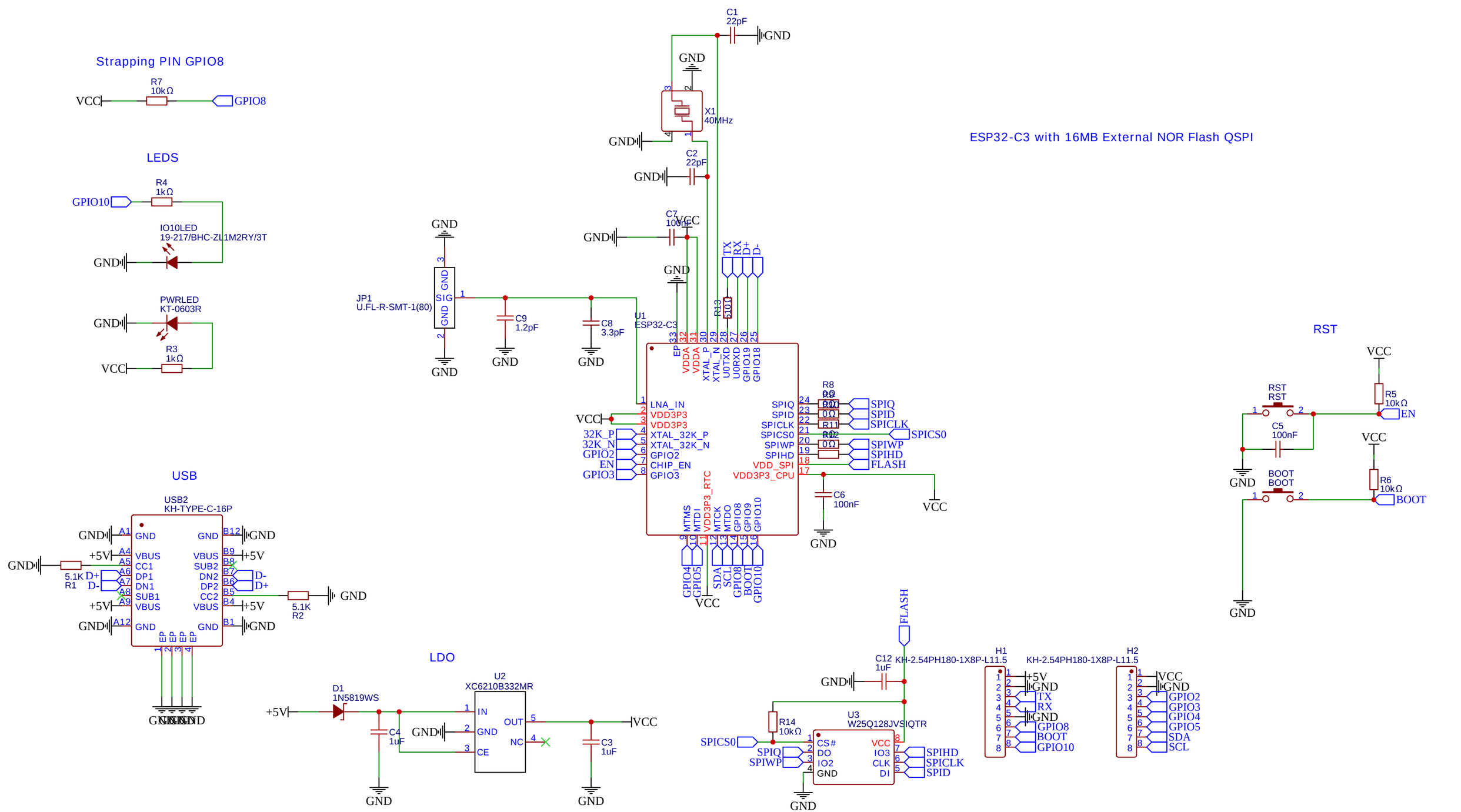
ESP32-C3 with 16MB External NOR Flash QSPI
Strapping PIN GPIO8
R7 10kΩ
VCC
GPIO8
LEDS
R4 1kΩ
GPIO10
IO10LED 19-217/BHC-ZL1M2RY/3T
PWRLED KT-0603R
R3 1kΩ
USB
USB2 KH-TYPE-C-16P
5.1K R1
5.1K R2
LDO
D1 1N5819WS
U2 XC6210B332MR
C4 1uF
C3 1uF
JP1 U.FL-R-SMT-1(80)
C9 1.2pF
C8 3.3pF
C1 22pF
C2 22pF
X1 40MHz
C7 100nF
U1 ESP32-C3
R13 510Ω
C6 100nF
R8 0Ω
R9 0Ω
R10 0Ω
R11 0Ω
R12 0Ω
C12 1uF
R14 10kΩ
U3 W25Q128JVSIQTR
H1 KH-2.54PH180-1X8P-L11.5
H2 KH-2.54PH180-1X8P-L11.5
RST
R5 10kΩ
C5 100nF
BOOT
R6 10kΩ
EN
FLASH
TITLE: ESP32-C3FH4 Dev Board - 16MB
REV: 1.0
Company: OKD
Sheet: 1/1
Date: 2022-10-27
Drawn By: Carsen Klock