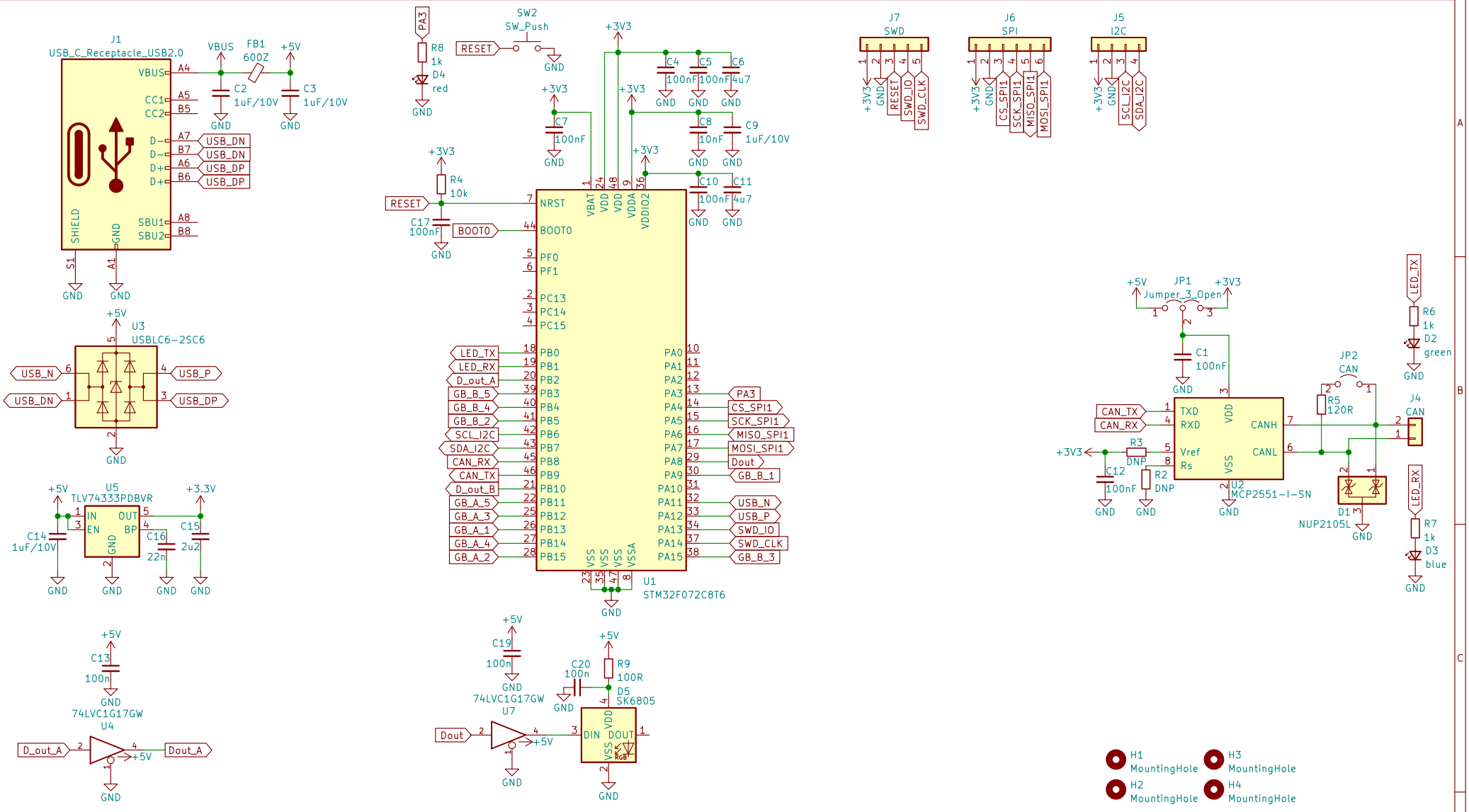

JNP

Sheet: /

File: GCode_Buttons_MCU.kicad_sch

Title: GCode Buttons MCU

Size: A4	Date: 2022-07-03	**Rev: V1.0**
KiCad E.D.A. kicad (6.0.6)		Id: 1/1