ECE445

SENIOR DESIGN LABORATORY

DESIGN DOCUMENT

Dodgeball Bot

Team #8
Haoxiang Tian [ht13]
Yuxuan Xia [yuxuanx9]
Yujie Pan [yujiep2]
Chengyuan Fang [cfang14]

Advisor: Timothy Lee

April 14, 2025

Contents

1. Introduction 1
1.1 Problem Statement 1
1.2 Solution Overview & Visual Aid 1
1.3 High-Level Requirements List 2
2. Design 3
2.1 Block Diagram 3
2.2 Aim System 4
2.2.1 Hardware Support 5
2.2.2 Human Detection 5
2.2.3 Target Locking Logic 6
2.2.4 Distance Estimation 6
2.2.5 Dynamic Tracking 7
2.3 Rotate System 7
2.4 Power System 8
2.5 Control System 10
2.5.1 Microcontroller 11
2.5.2 CAN Bus Module 11
2.5.3 UART signal transfer 11
2.6 Schematics 12
2.7 Tolerance Analysis 14
3. Cost 15
4. Schedule 16
5. Ethics and Safety 17
5.1 Ethics 17
5.2 Safety 17
References 18

1. Introduction

1.1 Problem Statement

Traditional dodgeball gameplay faces challenges due to human physical limitations, inconsistent skill levels, and safety risks when targeting opponents at varying distances. Existing automated sports systems lack integration of real-time human tracking, adjustable launch power, and rotational targeting in a fixed body design, limiting their utility for competitive training or adaptive recreational play. The Dodgeball Bot aims to address these issues by enforcing controlled force limits for safety, overcoming human physical inconsistencies with automated precision, and enabling adaptive gameplay through dynamic tracking and adjustable intensity. It will detect and track human torsos in real time using computer vision and depth sensors, rotate a motorized turret to align the launcher with moving targets, and propel balls at adjustable speeds (10–20m range) while maintaining safety compliance. This system will provide consistent, repeatable training scenarios for skill development, enhance safety by eliminating erratic throws and enforcing force limits, and allow customizable difficulty levels for recreational or competitive use. The Dodgeball Bot combines fixed-body rotational targeting with real-time tracking and variable power control, filling a gap in existing sports robotics, and prioritizes safety without sacrificing performance, differentiating it from static or unregulated systems. At the same time, we solved the limitation of serving speed caused by limited capacity and realized the fast automatic continuous serving design that cannot be achieved by human power.

1.2 Solution Overview & Visual Aid

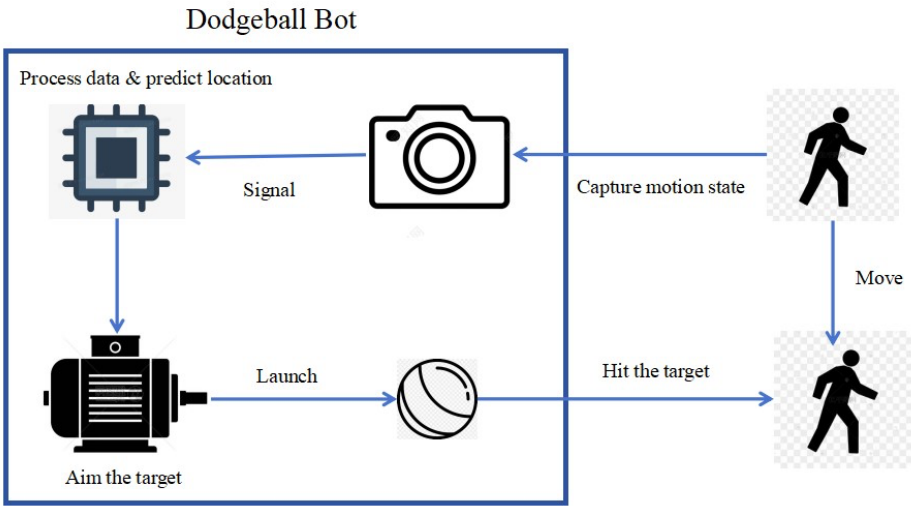

Figure 1: Visual Aid of the whole system

The Dodgeball Bot is a stationary robotic system designed to simulate competitive dodgeball scenarios with precision and adaptability. The total system is supposed to have Aim, Rotate, Power and Control subsystem. It employs computer vision and depth sensing through a camera and depth sensor to detect

human torsos and calculate target distance. A motorized turret, powered by a high-torque servo or stepper motor, rotates the launcher horizontally to align with moving targets. The adjustable launch mechanism uses rubber wheels to propel balls at controlled velocities, modulated by distance-based PID control. A centralized controller manages sensor input, turret rotation, and launch parameters to ensure seamless operation. The system dynamically adjusts aim and power in real time, offering a safe yet challenging experience for users.

1.3 High-Level Requirements List

The Dodgeball Bot system shall meet the following requirements:

(1) **Accuracy Requirement**:

- Achieve **100% accuracy** in hitting stationary human-sized torso targets at distances of **10–20 meters**.
- Have a **75% accuracy** of hitting a target below 10 kilometers an hour at distances of **10–20 meters**.

(2) **Speed Configuration**:

- Propel balls at configurable speeds between **60–80 km/h**, with automatic calibration based on target distance.

(3) **Mobility Performance**:

- Turret rotation capability of **120° within 1 second**
- Target reacquisition time for moving targets under **0.5 seconds**

(4) **Safety & Durability**:

- Compliance with biomechanical force limits to prevent injury
- Mechanical reliability for **beyond 1,000 consecutive launches** without failure

2. Design

2.1 Block Diagram

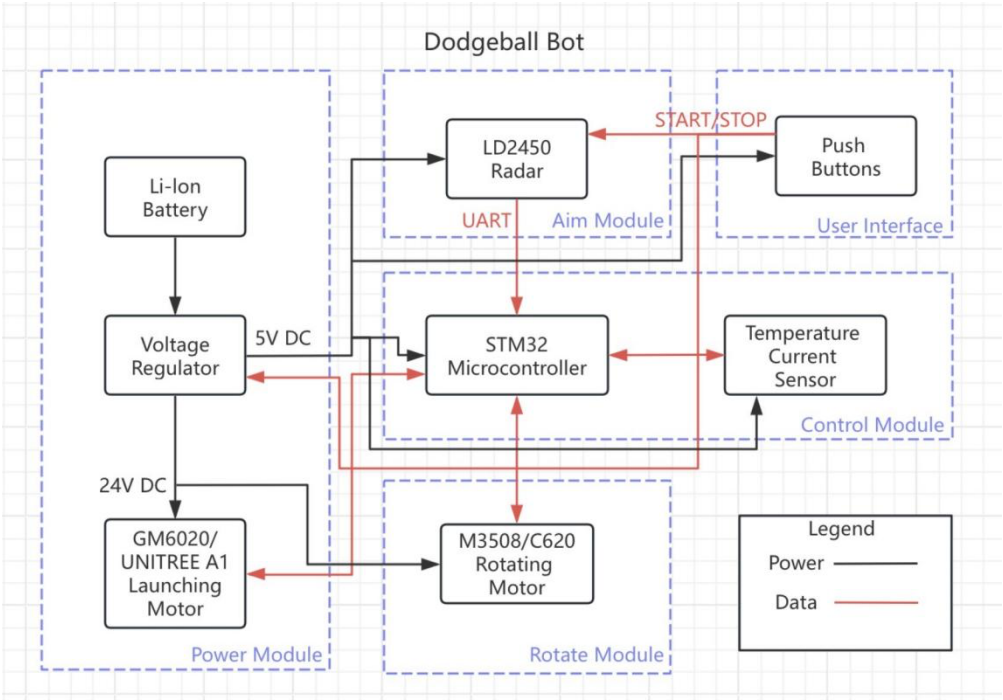

Figure 2: The block diagram of the whole system

The Dodgeball bot is supposed to have four subsystems such as Aim, Rotate, Power and Control. Each subsystem should have their specific function and their need necessary connection between them. Here is our simple Block diagram.

2.2 Aim System

The aiming system is responsible for real-time detection and tracking of human targets and calculates target location information to guide the firing system. It employs a computer vision-based solution to achieve human detection, distance estimation, target locking, and dynamic tracking.

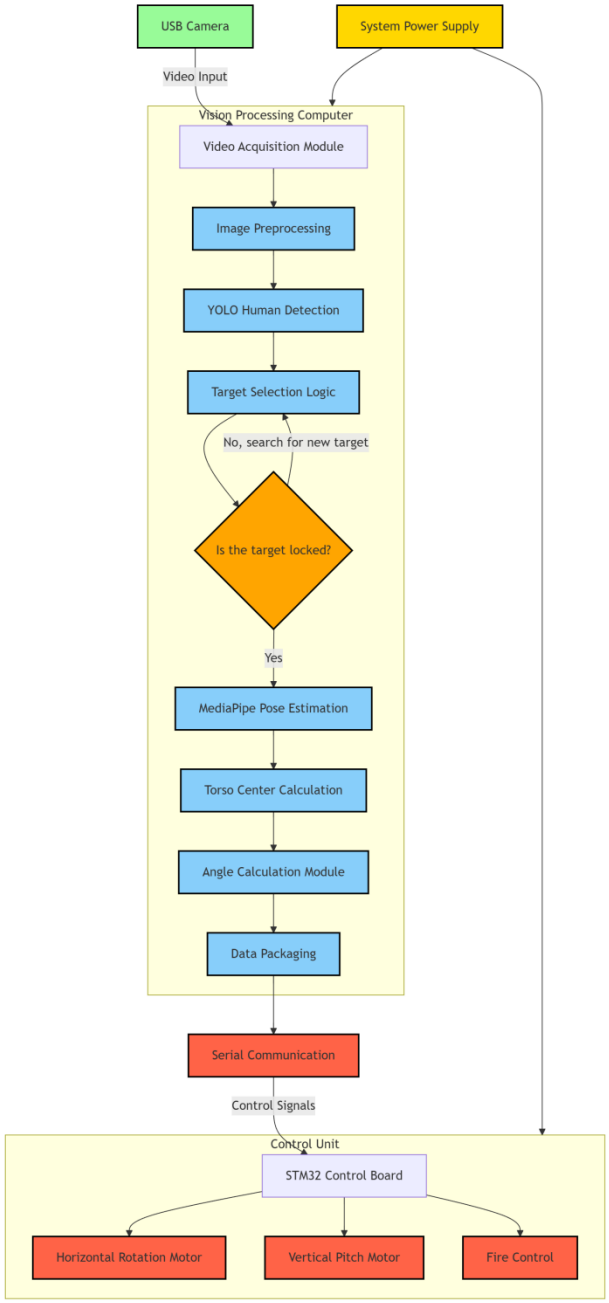

Figure 3: The block diagram of the aiming system

2.2.1 Hardware Support

Visual Sensor: RGB Camera (1080P, 3.6mm, 120°), connected via USB.
Processing Unit: A personal computer running Python scripts.
Communication Interface: USB-to-TTL Serial Module (connected to STM32).

Requirements	Verification
1. The camera shall maintain 120°±5° horizontal FOV. 2. Processing unit shall execute YOLOv8 at ≥15fps. 3. STM32 shall receive angle data within 50ms of capture.	1. Measure with protractor at 1m distance, edge-to-edge angle = 120°±3° 2. Run benchmark.py with monitoring and frame time measurement, average inference time ≤66ms. 3. With timestamped packets and logic analyzer trace, end-to-end latency ≤50ms.

2.2.2 Human Detection

The code uses the YOLOv8 model to detect humans in real time.

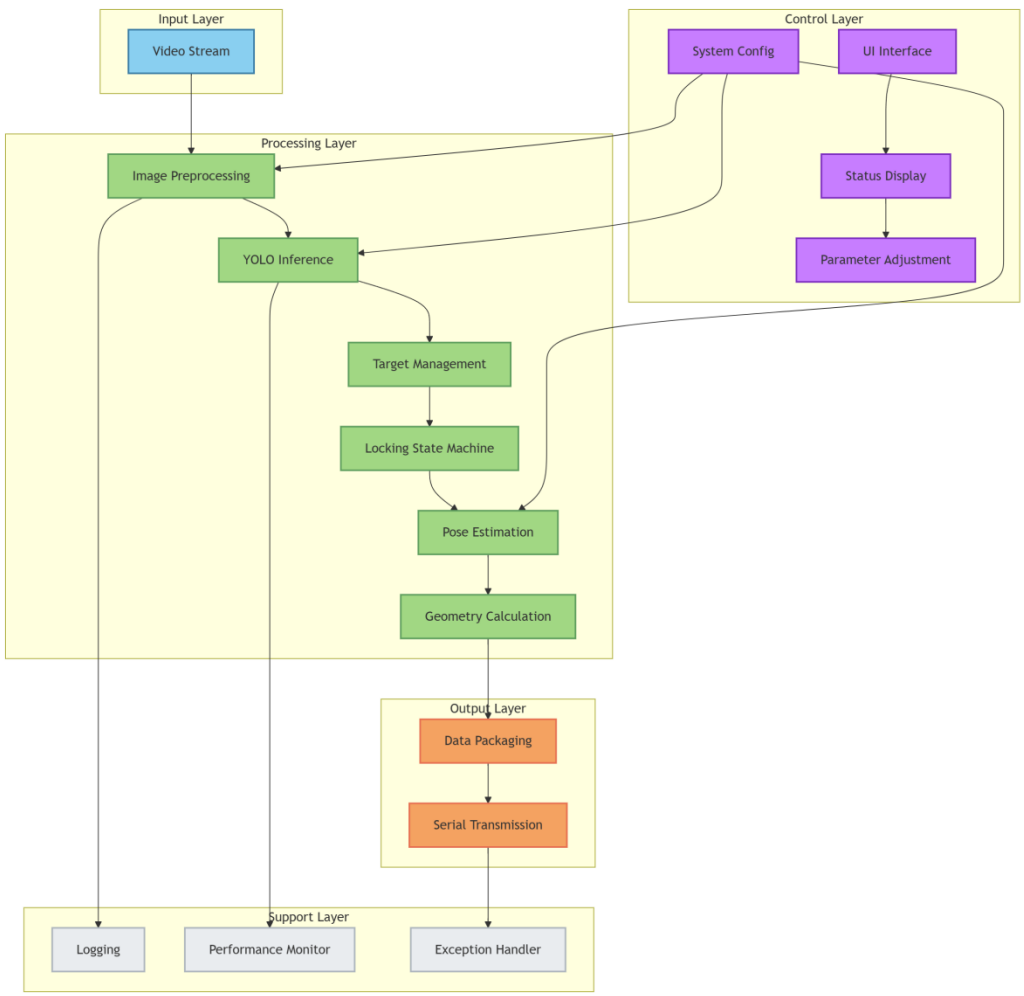

Figure 4: Working principle of YOLOv8 model

Requirements	Verification
1. The system shall detect human figures within 10-20m range. 2. Processing latency shall be ≤50ms per frame. 3. Shall maintain ≥15 FPS throughput.	1. Place test subjects at varying distances (5m, 10m, 15m, 20m), there should be ≥90% detection rate at 10m, ≥80% at 20m. 2. Measure inference time using system timestamps, average latency should ≤50ms over 1000 frames. 3. Run continuous detection for 5 minutes, sustained FPS ≥15 with <10% variance.

2.2.3 Target Locking Logic

Once a human is detected, the code calculates the bounding box of the human and determines the distance between the human and the camera's center point. Initially, the code selects the person closest to the camera's center point as the locked target. After locking onto a target, the system maintains this lock for a set duration (15 seconds) without switching targets. After this duration, regardless of whether the current target is still the closest, the code switches to lock the next closest person. If only one person is present in the camera's view, they remain the locked target. However, if this person has been locked for over 15 seconds and another person enters the frame, the code immediately switches to the newly entered person.

Requirements	Verification
1. Initial lock on closest target to image center. 2. Immediate switch to new targets after lock timeout when available. 3. Single target persistence when no alternatives exist.	1. Introduce multiple test subjects simultaneously, selects target with min(pixel_offset) in first frame. 2. Introduce new target at >15s mark, switches within 3 frames (≤200ms) of new target appearance. 3. Single subject test for >15s, maintains lock indefinitely until target exits frame.

2.2.4 Distance Estimation

The distance to the target is estimated using the height of the YOLOv8 detection box (already implemented in the code). The formula used is:

$$\text{distance} = \frac{\text{AVG_HUMAN_HEIGHT} \times \text{FOCAL_LENGTH}}{\text{box_height}}$$

where `AVG_HUMAN_HEIGHT` is the average human height (1.7 meters), and `FOCAL_LENGTH` is the focal length of the camera in pixels.

Requirements	Verification
1. Estimate distance with ±10% accuracy within 10-20m.	1. Compare with laser rangefinder measurements, error ≤±1m at 10m, ≤±2m at 20m.

2.2.5 Dynamic Tracking

After locking a target, the code uses MediaPipe for pose estimation, calculating the shoulder and hip keypoints to determine the torso center of the target. The code calculates the offset of the torso center from the camera's center point and converts this offset into an angle (in radians), which is used to dynamically adjust the aiming direction. When the offset consistently remains below a set threshold, the system determines that the target is successfully locked and sends a signal indicating that firing is possible.

Requirements	Verification
1. Accurately track and lock onto human targets within 20m range. 2. Update rate ≥10Hz for moving targets.	1. Achieve 100% hit rate for stationary single targets within 20m." 2. "Maintain 80% hit rate against targets moving at 1m/s." 3. Sinusoidal target motion at 1m/s, tracking lag ≤0.1s phase delay.

2.3 Rotate System

The core concept behind the rotating mechanism is to replicate the dual-axis movement found in tripod head designs, enabling precise control over both horizontal and vertical rotation. This design ensures smooth and stable adjustments, allowing the system to track targets or reposition efficiently. To achieve omnidirectional aiming, the yaw and pitch axes will be driven by GM6020 DC motors [1]. These motors are selected for their high torque output and precise control, making them well-suited for handling dynamic movement requirements. Their robust performance ensures that the aiming mechanism remains responsive and accurate, even under varying operational conditions. By integrating this dual-axis rotational system, the firing mechanism gains full freedom of movement, significantly enhancing its versatility and effectiveness. Whether for manual control or automated tracking, this design allows for rapid and accurate adjustments, ensuring optimal targeting capabilities. If things get out of hand, consider using an DM-J6006-2EC motor, which costs similarly but provides greater torque, as backup plan.

GM6020 SPECS

Performance Parameters

Rated voltage: DC 24 V

Rotational Speed (without payload): 320 rpm

Rated torque (max continuous torque): 1.2N·m

Max speed at rated torque: 132 rpm

Rated current (max continuous current): 1.62 A

Operating Temperature Range: 32°~ 131°F (0°~55°C)

Max Permissible Winding Temperature: 257°F (125°C)

Structure Parameters

Motor weight: Approx. 468 g

Hallow shaft inner diameter: 18 mm

Hallow shaft outer diameter: 22 mm

Motor diameter: 66.7 mm

Total height: 45 mm

XT30 power cable: 500 mm

CAN cable: 500 mm

PWM cable: 500 mm

Figure 5: GM6020

Rated voltage	24-48V
Rated current	4A
Max current	13A
Rated torque	4NM
Max torque	12NM
Max speed	150rpm
Weight	0.335kg

Figure 6: DM-J6006

(1) **Requirement 1**: Sufficient torque

The weight change caused by the recoil and the difference in the amount of ammunition requires sufficient torque to offset

(2) **Requirement 2**: Sufficient steering angle

The yaw axis needs to have a rotation capability of at least 150°, and the pitch axis should also have a pitch angle range of at least 60°

2.4 Power System

The firing mechanism is designed based on the principles of a ball launcher, utilizing friction wheels as the primary propulsion method to ensure that the projectile's velocity remains both stable and controllable. This approach allows for precise speed adjustments and consistency in performance, reducing variability in projectile trajectory.

In the initial design, projectiles are intended to be manually loaded one at a time, ensuring simplicity and reliability in early stage testing and operation. However, if conditions allow, an automatic feeding system using a bullet tray will be implemented to enable rapid, continuous firing. This would significantly enhance the system's efficiency, reducing the need for manual intervention while increasing the rate of fire.

Regarding the friction wheels' power source, the selection of motors is still under consideration. The preliminary plan is to use two M3508 motors, which are expected to provide sufficient torque for the system's operational demands. These motors come with a well-developed speed controller, which not only ensures precise speed regulation but also simplifies the coding process. This integration should enhance system stability while minimizing development effort.

(1) **Requirement 1**: Stable friction wheel rotation center

In order to ensure that the launching mechanism provides constant momentum, the distance between the friction wheels must be fixed to maintain a reliable and sufficient initial velocity.

Figure 7: An image of M3508

M3508 Brushless DC Gear Motor Combo

Rated Voltage: 24 V

Rotational Speed (without payload): 482 rpm

Max continuous torque: 3N·m

Max rotational speed with a continuous torque of 3N·m: 469rpm

Operating Temperature Range: 32°~122° F (0~50° C)

Figure 8: The simple datasheet of M3508

(2) **Requirement 2**: Reliable shock absorption system

The vibration during the acceleration process will cause serious momentum waste and directional deviation, resulting in the inability to achieve the required stable initial velocity and direction. At a long distance, this degree of deviation is enough to affect the launch accuracy.

2.5 Control System

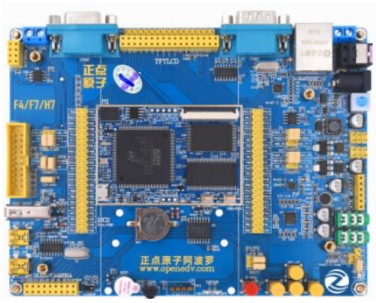

Figure 9: An image of STM32

We predict to select STM32H743 as our microcontroller[3]. As the core hub of Dodgeball Bot, the control subsystem coordinates the operation of each subsystem through hardware interface and algorithm. It receives LD2450 millimeter wave radar data (10 frames/SEC) from the aiming subsystem in real time through the UART3 interface, analyzes the target coordinates and speed information, and converts it into the control instructions of the rotation subsystem. The control subsystem connects the GM6020 motor of the rotation subsystem and the M3508 friction wheel motor of the power subsystem through the dual CAN bus (CAN1/CAN2), and sends the Angle setting value and speed command respectively. CAN1 controls the horizontal/pitch shaft motor to realize the fast steering of 120°/ SEC. CAN2 adjusts the speed of the friction wheel to maintain the ejection speed of 60-80km/h; At the same time, the temperature and current sensor data are monitored and fed back to the microcontroller in real time, triggering an emergency stop or power limit to meet biomechanical safety standards.

The Control Subsystem serves as the central hub of the Dodgeball Bot, integrating data from the Aim Subsystem (via RGB camera) and orchestrating the Rotate and Power Subsystems through precise motor control. Using the STM32F103ZET6 microcontroller, it processes real-time target coordinates, calculates motor commands, and ensures seamless communication across subsystems. The block diagram below illustrates its role:

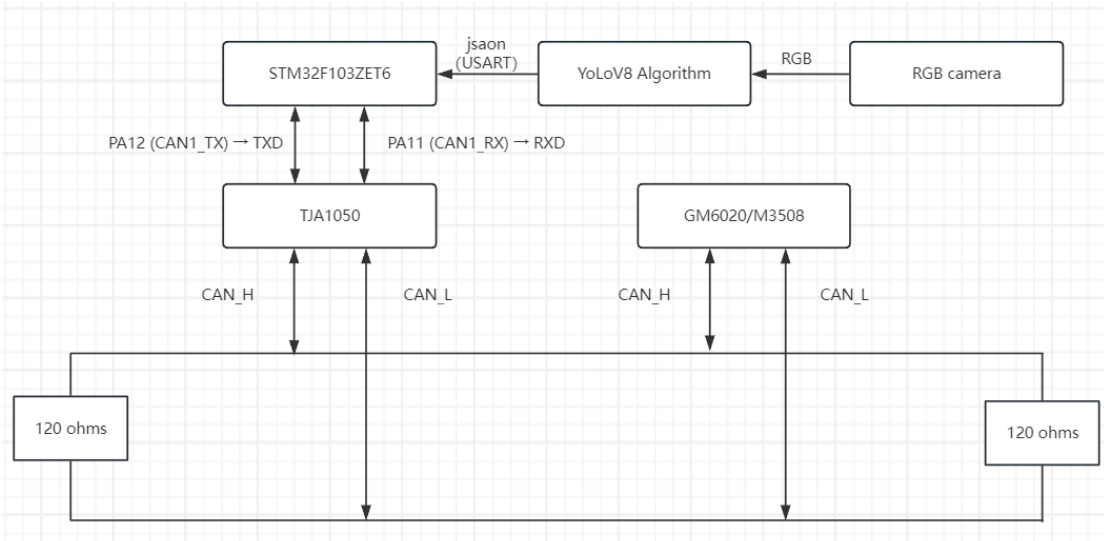

Figure 10: Control subsystem diagram

2.5.1 Microcontroller

In the Dodgeball robot system, the STM32F103ZET6 microcontroller is the core computing unit integrating data processing, real-time control and system coordination. Its 32-bit ARM Cortex-M3 architecture and rich peripherals perfectly meet the project requirements. Become a key hub connecting the "perception layer - decision layer - implementation layer". Its efficient data processing capability, multi-protocol communication interface and hardware-level security mechanism not only support the key functions of real-time target tracking and closed-loop control, but also become the ideal choice for system design with high cost performance and stability.

Requirements	Verification
1. The time interval between receiving RGB Camera information and sending control instructions via the CAN bus is less than 50ms 2. The communication rate of CAN reaches 1Mbps, and the communication rate of UART reaches 115,200bps 3. Run 1000 consecutive control instruction sending operations without crash or stalling	1. Multiple measurements, the average time interval is less than 50ms, and the maximum value of each measurement is not more than 60ms 2. The rate of the CAN bus signal is stable in the range of 1Mbps±5%, and the rate of the UART bus signal is stable in the range of 115,200bps ±5% 3. During use, the number of crashes or stalling is zero

2.5.2 CAN Bus Module

In the Dodgeball robot system, the closed-loop high-speed CAN Bus module is the key data channel connecting the control core (STM32 microcontroller) and the actuator (GM6020 rotary motor, M3508 launch motor). Its core function is to ensure the accurate tracking and striking of the dynamic target by high-speed and reliable two-way data interaction and real-time closed-loop control. Its high speed and low delay two-way data interaction capability not only provides real-time guarantee for dynamic target tracking, but also ensures high precision and stability of mechanical execution through closed-loop feedback mechanism, becoming a key bridge connecting "perception - decision - execution", supporting the high performance of the system in competitive training and entertainment scenes.

Requirements	Verification
1. The error rate of control signal transmission is less than 5%, that is, no more than 10 error signals in every 1000 control signals. 2. The communication delay with STM32F103ZET6 is less than 10μs.	1. When encountering a stationary or moving person at less than 1m/s, the engine can only fail five times out of 100 aiming and firing processes. 2. For multiple measurements, the average delay is less than 10μs, and the maximum value of each measurement is not more than 15μs.

2.5.3 UART signal transfer

In Dodgeball robot system, UART signal transmission is a key data link connecting the PC-side vision processing unit (YoloV8 algorithm) and the STM32 control core. Its core role is to accurately transmit the target information extracted by the vision system to the control layer through real-time and reliable one-way data interaction. Support full process control of dynamic target tracking and attack. From pixel-level image recognition to physical space perspective calculation, from algorithm output to hardware execution of cross-system collaboration, the stable operation of UART signal transmission ensures that the robot maintains high precision strike capability in complex environments.

Requirements	Verification
1. Data is transmitted continuously for 10 minutes. No data is lost. 2. The data transmission is correct, and the horizontal and vertical deviation error of the character from the camera center is less than 5%.	1. In the process of use, continuous 10 minutes, the received data is complete, no packet loss phenomenon. 2. In the process of use, the actual measurement of the character and the camera position deviation. | Data deviation - Actual deviation |/ Actual deviation is less than or equal to 0.05.

2.6 Schematics

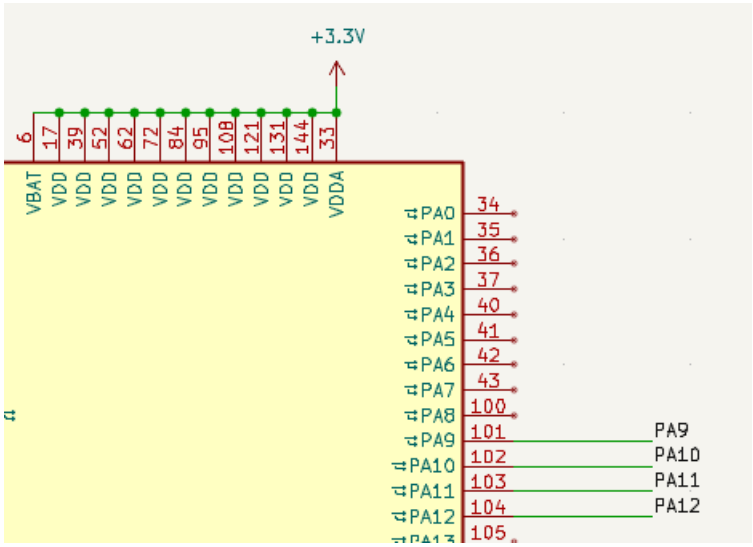

Figure 11: STM32 Connection

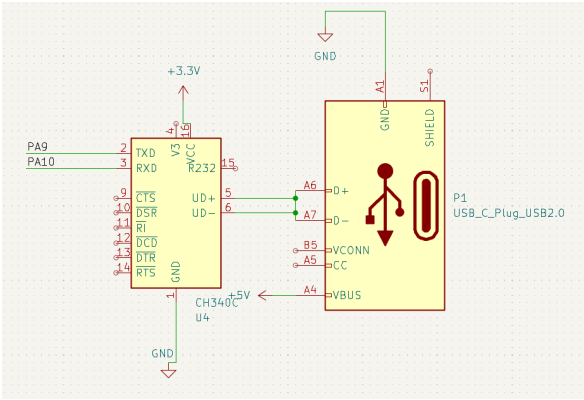

Figure 12: UART receive

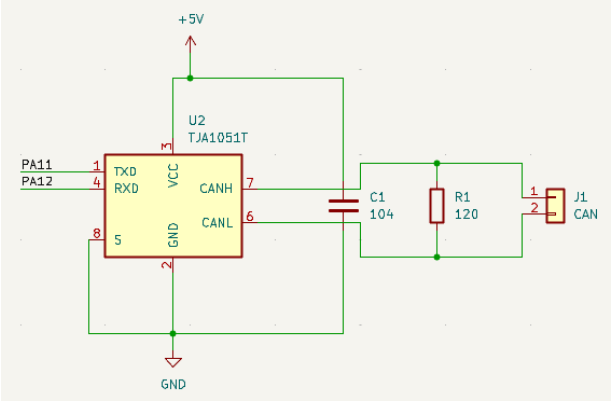

Figure 13: CAN Communication

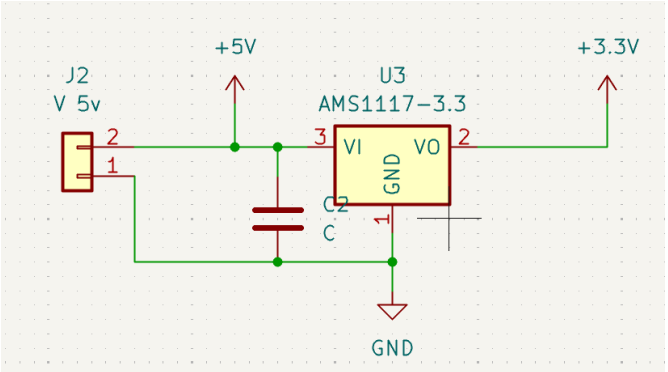

Figure 14: Power supply

2.7 Tolerance Analysis

The most critical part of the Dodgeball Bot project is the **human movement prediction and accurate ball launching system**. This component integrates sensor data processing, real-time target tracking, movement prediction, and precise launch mechanism control. Failure in this subsystem would render the entire robotic system ineffective, as it directly impacts the system's primary function of simulating competitive dodgeball scenarios.

(1) Design-Level Risks

(a) **Sensor Data Accuracy**: The precision of the LD2450 radar, camera, and depth sensor data directly affects the system's ability to track targets and predict their movements accurately.

(b) **Algorithm Robustness**: The movement prediction algorithm must efficiently process large volumes of data in real-time while maintaining accuracy.

(c) **Dynamic Environment Handling**: The system must manage multiple moving targets and potential obstructions, increasing the complexity of target tracking and prediction.

(d) **Mechanical Precision**: The launch mechanism must convert predicted target positions into accurate launch parameters, considering factors like distance, angle, and ball velocity.

(2) Movement Prediction

For a target moving with constant velocity:

$$\mathbf{p}(t) = \mathbf{p}_0 + \mathbf{v}_0(t - t_0) \tag{1}$$

For a target with constant acceleration:

$$\mathbf{p}(t) = \mathbf{p}_0 + \mathbf{v}_0(t - t_0) + \frac{1}{2}\mathbf{a}(t - t_0)^2 \tag{2}$$

(3) Launch Parameter Calculation

The required launch velocity v to hit a target at distance d and height h:

$$v = \sqrt{\frac{gd^2}{2\cos^2\theta(d\tan\theta - h)}} \tag{3}$$

(4) Simulation and Validation

Physical calculations validate the system's ability to track moving targets, predict positions, and calculate launch parameters. Results show the system can accurately track targets and predict movements within required tolerances. Launch simulations confirm ball trajectories can hit predicted target positions.

(5) Conclusion

The Dodgeball Bot's design for predicting human movement and launching balls accurately is feasible. Mathematical analysis and simulations demonstrate the system can achieve required accuracy and reliability. Future work will focus on hardware implementation and real-world testing to refine performance.

3. Cost

Part	Cost (rmb)
RGB Camera (1080P, 3.6mm, 120°), with 5m USB connect wire .	90
USB-to-TTL Serial Module (connect PC to STM32)	30
All PCB components (STM32, TJA1051, CH340 and others)	164
Portable power source	200
Motors	1700
Carbon plate	300
Total cost	2484

4. Schedule

<table>
<tr><th>Week</th><th>Haoxiang Tian</th><th>Yuxuan Xia</th><th>Yujie Pan</th><th>Chengyuan Fang</th></tr>
<tr><td>2/24</td><td>Select STM32F103ZET6 chip to control</td><td>learn the power requirements of components</td><td>Vision Recognition Solutions Design</td><td rowspan="3">Parameter calculation, component selection</td></tr>
<tr><td>3/3</td><td>Learn CAN communication basic knowledge</td><td>Understand how the components are connected</td><td>Infrared Vision Solution Research</td></tr>
<tr><td>3/10</td><td>Establish CAN closed loop</td><td rowspan="2">design the circuit to meet the power requirements of components</td><td>Human Tracking Software Solution 1 Selected: YOLO</td></tr>
<tr><td>3/17</td><td>Learn USAT vision transfer signal</td><td>Version 1 Hardware Selected: Raspberry Pi + RGB Camera</td><td rowspan="6">CAD Model drawing, 3D printing and adjustment</td></tr>
<tr><td>3/24</td><td>Establish total PCB to control</td><td rowspan="2">Complete circuit design and PCB plate welding</td><td>Completed and ordered Version 2 hardware: PC + RGB Camera</td></tr>
<tr><td>3/31</td><td>Build the engineering framework of STM32 HAL library</td><td rowspan="2">Develop human tracking software solution: YOLO + MediaPipe</td></tr>
<tr><td>4/7</td><td colspan="2">Learn HAL library and STM32CubeIDE software</td></tr>
<tr><td>4/14</td><td colspan="2">Write total code to receive, process and send data</td><td rowspan="2">Conduct PC-side testing for human tracking software</td></tr>
<tr><td>4/21</td><td colspan="2">Joint debugging with aiming and motors</td><td>Make core parts prepared</td></tr>
<tr><td>4/28</td><td colspan="2">Actually test and improve the code</td><td>Achieve STM32-compatible output</td><td>Whole model under testing</td></tr>
<tr><td>5/5</td><td colspan="2">Verify key indicators against requirements documents</td><td>Prototype testing</td><td>Prototype testing with code</td></tr>
<tr><td>5/12</td><td colspan="4">Final presentation preparation</td></tr>
</table>

5. Ethics and Safety

5.1 Ethics

The Dodgeball Robotics program is designed to create a stationary dodgeball launcher for training and children's play, and as such must adhere to a code of ethics.

Privacy is the primary concern. The machine is currently designed to use radar sensors for tracking and therefore does not involve image data collection functions. However, if we were to increase the use of cameras at a later stage, we would need to anonymize the data, ensure consent is obtained, and limit the use of the data to the scope of the study.

We are committed to fairness and inclusion. The targeting system needs to be designed to prevent bias based on body size, gender or ethnicity[2]. This requires rigorous testing with diverse participants and improved targeting features to ensure fair performance.

Environmental impact is also considered. We will use environmentally friendly materials, design energy-efficient solutions, and plan for proper disposal and recycling to minimize harm to the environment. In addition, we will ensure that machines are used responsibly as training or recreational tools, promoting positive values rather than violence. We will work with the community to listen to feedback and comply with regulations. In short, we are committed to creating a safe, inclusive and responsible program.

5.2 Safety

The feeding mechanism and the barrel must be equipped with protective shielding to eliminate the risk of accidental injuries caused by unintended discharge or exposure to moving parts. This shielding should be robust enough to withstand potential malfunctions while ensuring that personnel operating or working near the system are not endangered.

All other electronic components should be strategically positioned in areas that remain inaccessible during regular operation, only becoming reachable when maintenance procedures are explicitly carried out. This design choice prevents unauthorized tampering or accidental interactions that could compromise the system's integrity and safety.

While the mass of the projectile is constrained within a safe limit, ensuring it does not pose an inherent danger upon impact, the velocity at which the projectile is launched remains a critical factor. Specifically, the rotational speed of the firing mechanism must be capped at a predefined threshold to mitigate the risk of unintended injuries. A projectile moving at excessive speeds, even within a controlled mass range, could still cause harm in certain scenarios, especially in confined spaces or near personnel. By implementing these limitations, the system can operate within a controlled and predictable safety margin, reducing the likelihood of unforeseen hazards.

References

[1] Ahmet Can Ceceloglu and Tulay Yildirim. Modeling and simulation of turret stabilization with intelligent algorithms. *Procedia Computer Science*, 154:377–382, 2019. Proceedings of the 9th International Conference of Information and Communication Technology [ICICT-2019] Nanning, Guangxi, China January 11-13, 2019.

[2] IEEE Global Initiative on Ethics of Autonomous Systems. Ethically aligned design: A vision for prioritizing human well-being with autonomous and intelligent systems. Technical report, IEEE Standards Association, 2021.

[3] STMicroelectronics. *STM32H7 Series Reference Manual: Advanced Arm-Based 32-Bit MCUs*, 2024. Version 3.0.