ESP32

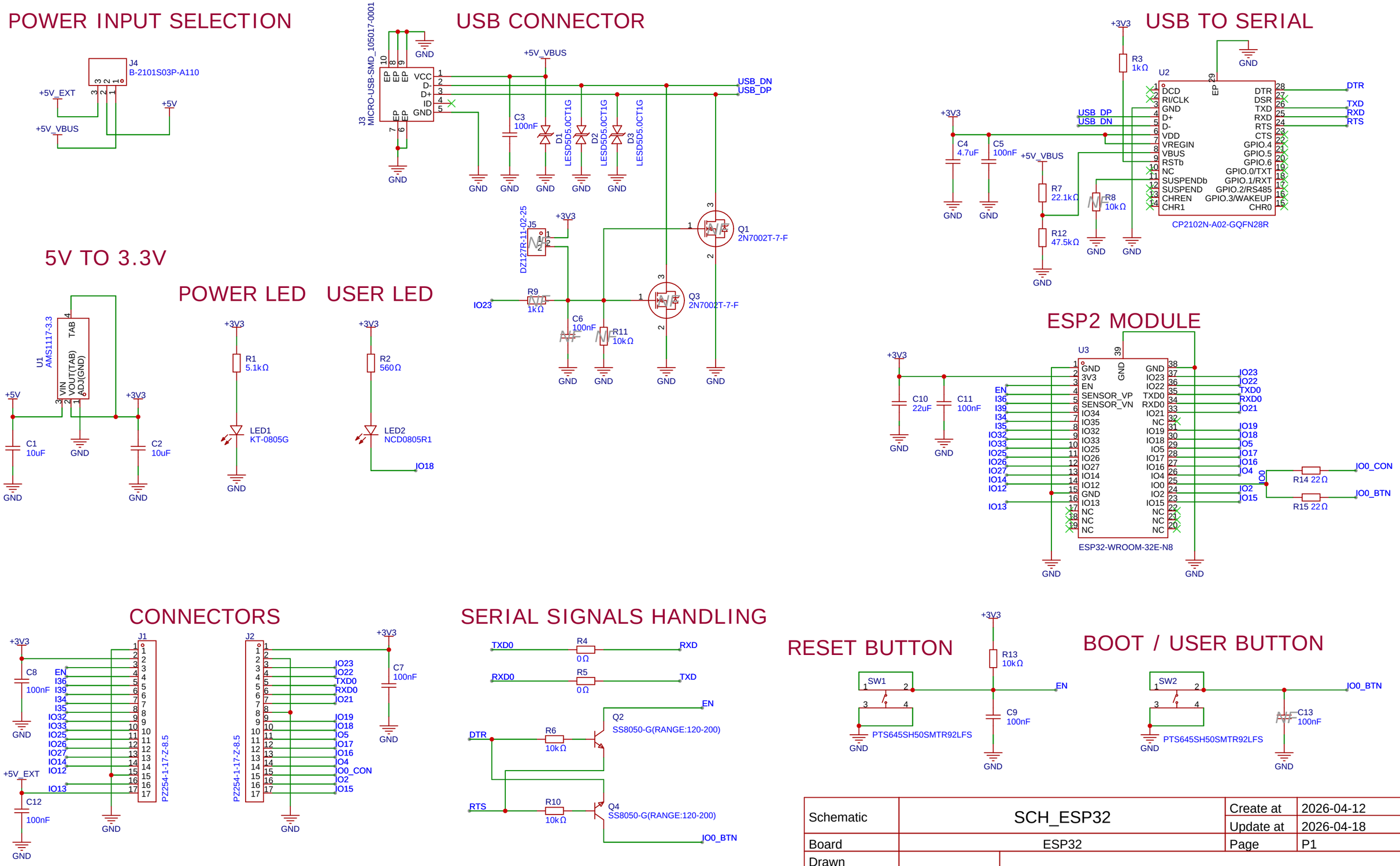

https://dl.espressif.com/dl/schematics/ESP32-S2-DevKitM-1_V1_Schematics.pdf
https://dl.espressif.com/dl/schematics/esp32_devkitc_v4_sch.pdf
https://documentation.espressif.com/esp32-wroom-32e_esp32-wroom-32ue_datasheet_en.pdf
https://docs.espressif.com/projects/esp-dev-kits/en/latest/esp32/esp32-devkitc/user_guide.html

Schematic	SCH_ESP32	Create at	2026-04-12
		Update at	2026-04-18
Board	ESP32	Page	P1
Drawn	ESP32		
Reviewed			
	Version	Size	Page 1 Total 1
EasyEDA	V1.0	A3	MFG