SHEETS 2

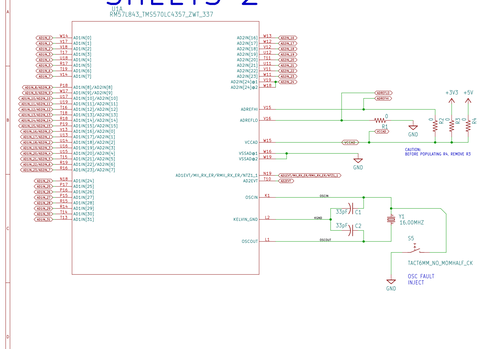

SHEETS 3

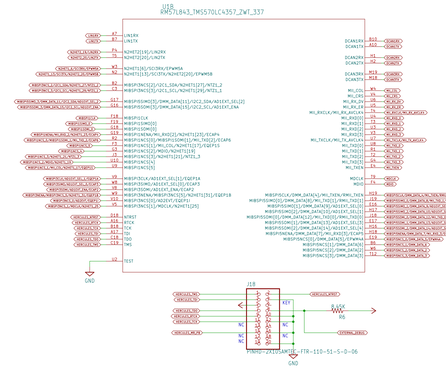

SHEETS 4

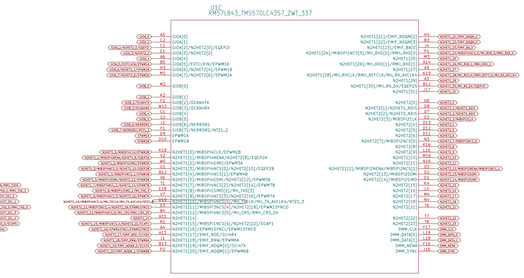

SHEETS 5

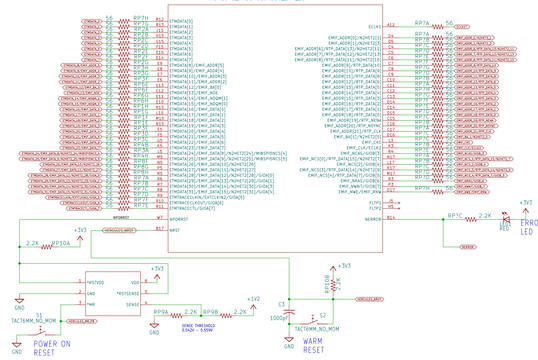

SHEETS 6

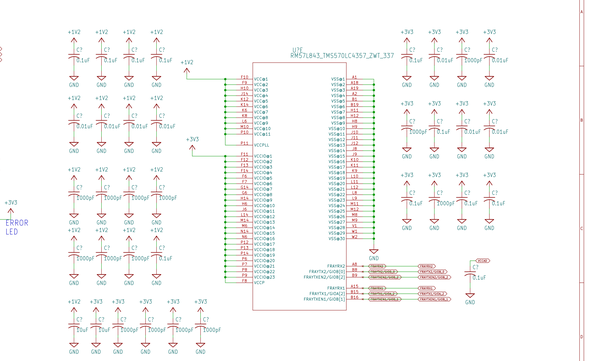

SHEETS 7

BOOSTER PACK SITE 1

NOTES:

JP2 & JP3 are normally shorted on the PCB – the footprint consists of an (unpopulated) 2 pin SMT header and a solder-bridging structure.
Most users can leave these jumpers as-is.
Certain booster packs may require that the position is opened – these are booster packs that would otherwise supply power to the launchpad through these pins.
Providing +3V3 to the launchpad is a problem because there would be a conflict with the launchpad's on-board LM26420 regulator.
Providing +5V to the launchpad through the booster pack could be ok, but the barrel jack is preferred as it is protected with a PTC.
Also be careful to avoid back powering the USB connection if you do this.
In some cases you may find the need to make/break the connections JP2 JP3 frequently.
If you do, then you can remove the solder bridge and mount a 2 pin SMT header on the footprint location which can then be opened/closed by using a Jumper or Shunt.

SHEETS 8

BOOSTER PACK SITE 2

NOTES:

JP4 & JP5 are normally shorted on the PCB – the footprint consists of an (unpopulated) 2 pin SMT header and a solder-bridging structure.
Most users can leave these jumpers as-is.
Certain booster packs may require that the position is opened – these are booster packs that would otherwise supply power to the launchpad through these pins.
Providing +3V3 to the launchpad is a problem because there would be a conflict with the launchpad's on-board LM26420 regulator.
Providing +5V to the launchpad through the booster pack could be ok, but the barrel jack is preferred as it is protected with a PTC.
Also be careful to avoid back powering the USB connection if you do this.
In some cases you may find the need to make/break the connections JP4 JP5 frequently.
If you do, then you can remove the solder bridge and mount a 2 pin SMT header on the footprint location which can then be opened/closed by using a Jumper or Shunt.

SHEETS 9

PROTO BOARD HEADERS

SHEETS 10

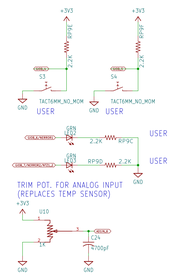

SHEETS 11

HERCULES POWER

POWER INDICATOR LED

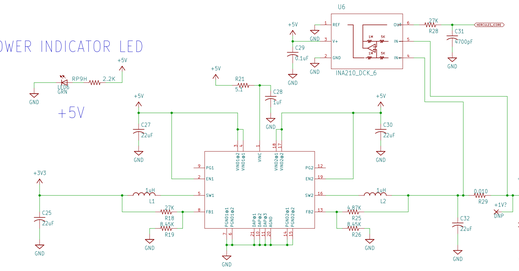

SHEETS 12

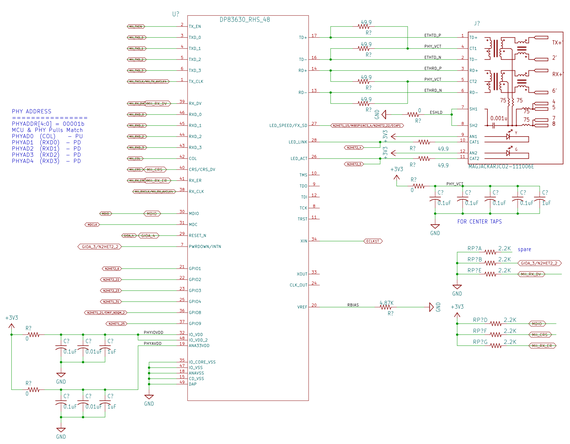

SHEETS 13

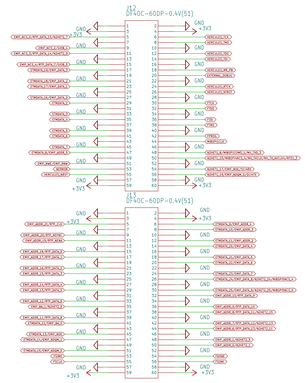

SHEETS 14

SHEETS 15

XDS110 DEBUG PROBE

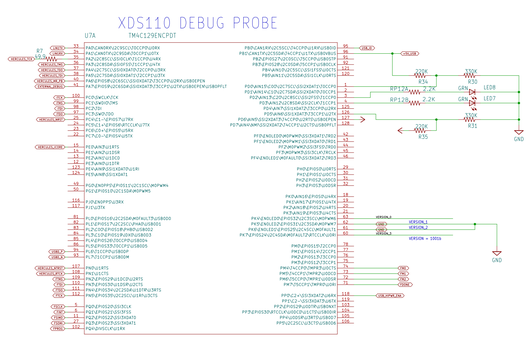

SHEETS 16

XDS110 DEBUG PROBE

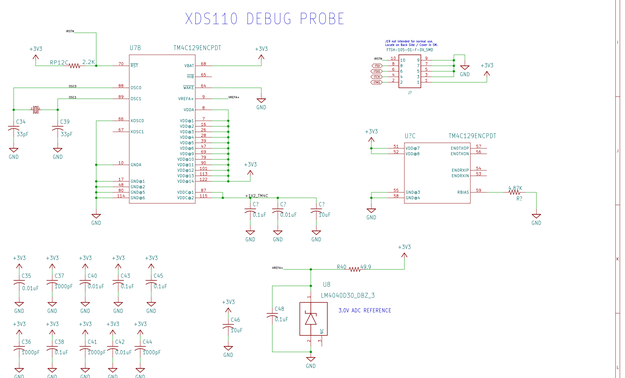

SHEETS 17

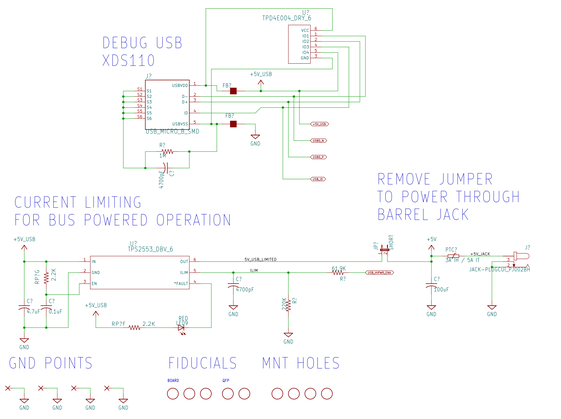

SHEETS 1

LAUNCHXL2-570LC43 / LAUNCHXL2-RM57L
337 ZWT LAUNCHPAD XL2

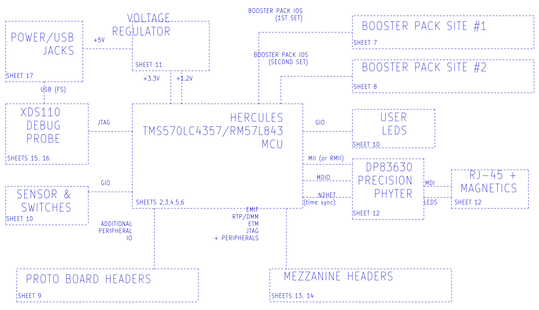

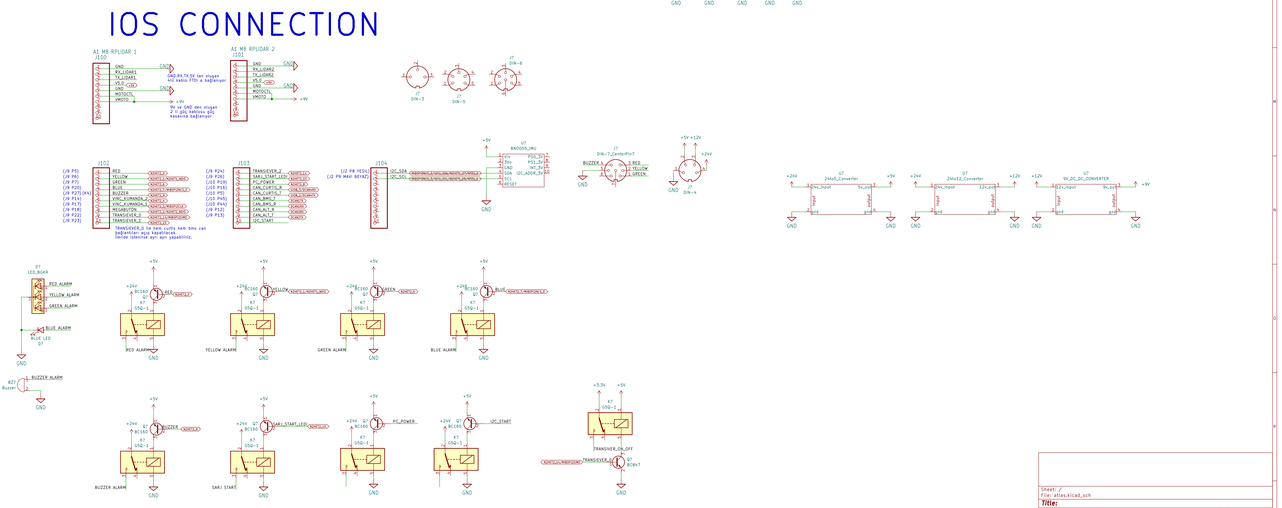

Sheet: /			
File: atlas.kicad_sch			
Title:			
Size: A3	Date:		Rev:
KiCad E.D.A. eeschema (6.0.6)			Id: 1/1