Rev	Date	Author	Descriptions	Rev	Date	Author	Descriptions
1.0	Dec 19, 2016		Re-drawn from 20140806 design with Valve title blocks.				

VALVE

CONFIDENTIAL

THIS DOCUMENT AND THE INFORMATION CONTAINED HEREIN IS THE PROPERTY OF VALVE CORPORATION AND MAY NOT BE REPRODUCED OR DISCLOSED TO ANY THIRD PARTY WITHOUT PRIOR WRITTEN PERMISSION OF VALVE CORPORATION.

Project Title: WIRELESS RECEIVER

Page Title: Revision History

Size		Name	Date	Document Number	Rev
Custom	Designed				01
	Reviewed				

Date:

Sheet 1 of 2

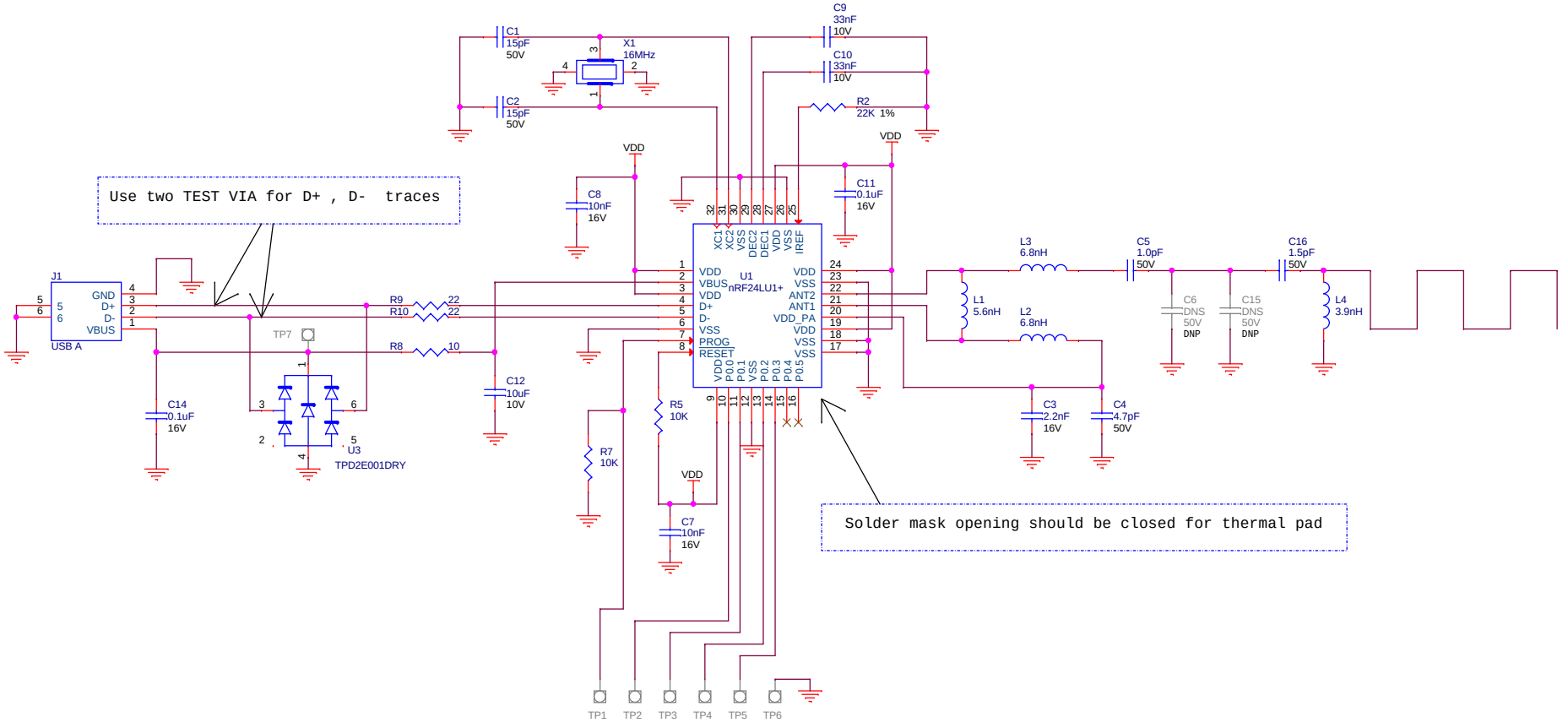

VALVE

CONFIDENTIAL

THIS DOCUMENT AND THE INFORMATION CONTAINED HEREIN ARE PROPRIETARY TO VALVE CORPORATION AND SHALL NOT BE USED BY, OR DISCLOSED IN WHOLE OR IN PART TO ANYONE OUTSIDE OF VALVE CORPORATION WITHOUT THE PRIOR WRITTEN PERMISSION OF VALVE CORPORATION.

Project Title: WIRELESS RECEIVER

Page Title: WIRELESS RECEIVER

Size		Name	Date	Document Number	Rev
Custom	Designed				01
	Reviewed				

Date: Sheet 2 of 2