74ACT series is good up to 50 MHz.

VDC is <= 13.8 volts for RD16HHF1.

I(dq) is in the range of 250mA to even 600mA.

Ideally VDC == 12v for RD16HHF1.

The 100nF + 680R negative feedback circuit is calculated for RD16HHF1.

Motivation: We want higher efficiencies at 21 MHz and 28 MHz.

(VU2ASH) The PCB layout should be linear in PA as the signal proceeds, to avoid input-output feedback especially at higher frequency. It improves stability.

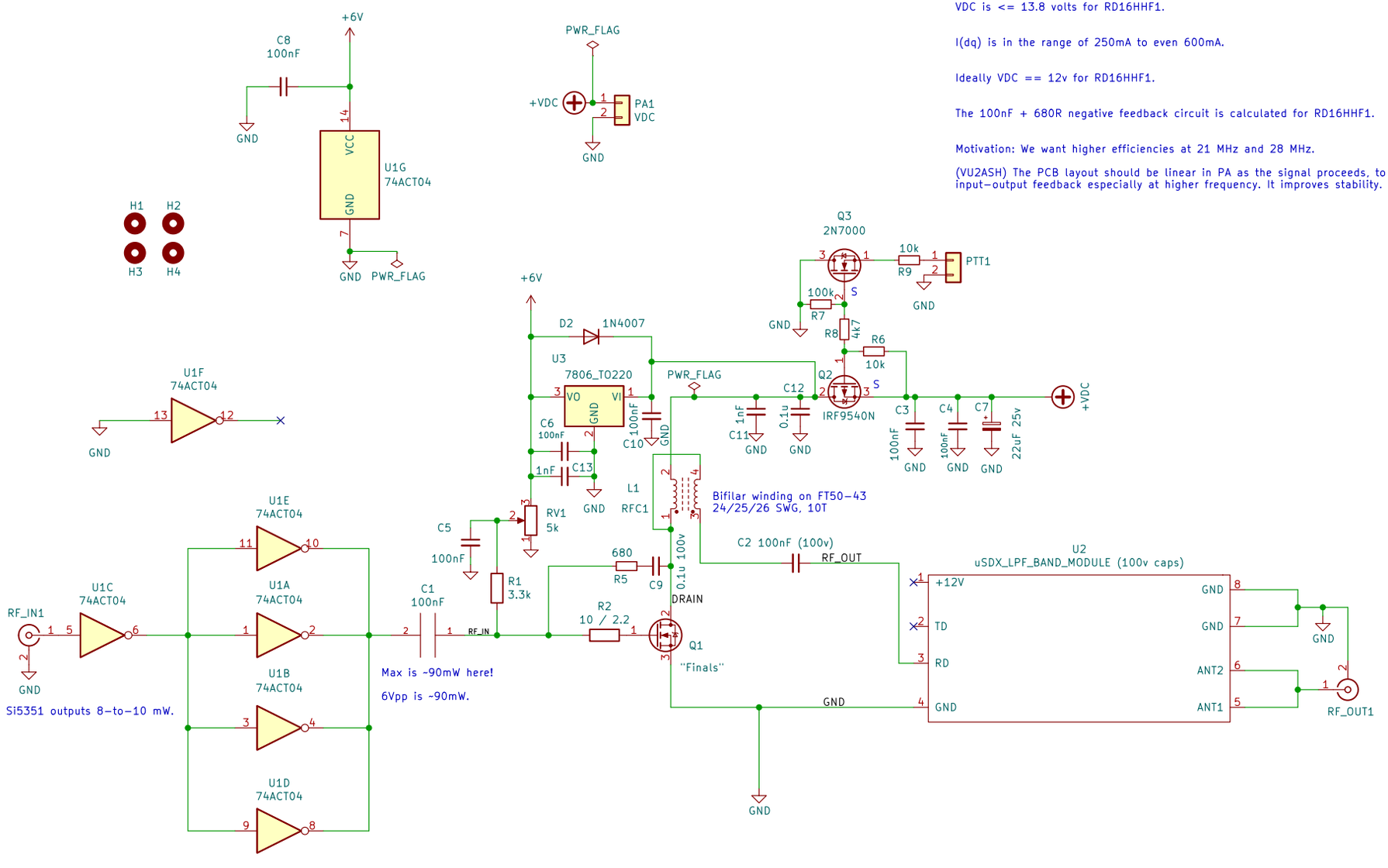

Robust Class-C / Class-D Single-ended RD16HHF1 powered HF PA

Uses ideas from VU2ASH, HAMBREWERS, QRP Labs, Tom (AK2B), VK3PE, and G6LBQ

Author: Dhiru Kholia (VU3CER)

Sheet: /
File: HF-PA.kicad_sch

Title: Easy-PA-With-Pluggable-LPF

Size: User	Date: 2022-01-22	**Rev: v0.01**
KiCad E.D.A. kicad 6.0.1-79c1e3a40b~116~ubuntu21.10.1		Id: 1/1