For a production board:
- make R8, R6, R35 and R33, 0402 and exact!
- make 47nF caps 0402

Reviews on:
- Reddit
- EEBlog
- KiCad Discord
- Slack

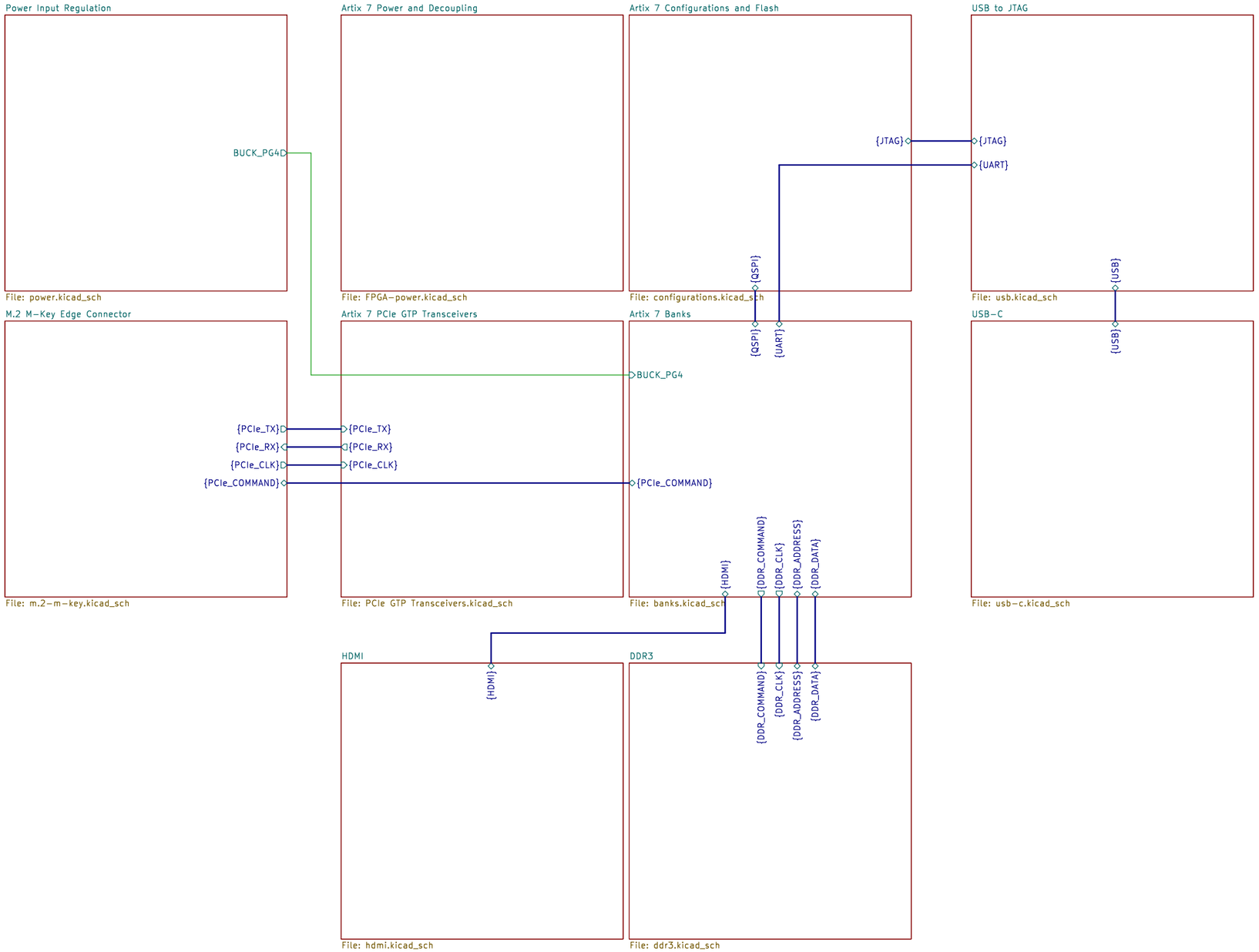

https://github.com/KaiPereira/M.2-FPGA-Accelerator

Kai Pereira

Sheet: /
File: PCB.kicad_sch

Title: M.2 FPGA Hardware Accelerator Devboard

Size: A3	Date:	**Rev: v1.0**
KiCad E.D.A. 9.0.6		Id: 1/11

I inverted the bus symbol, to create an edge connector symbol
DOUBLE CHECK the transmit/receive are the right orientation!!
Pg 150, https://picture.iczhiku.com/resource/eetop/sHksKPigIJigRbbx.pdf

All the NC's are SATA only features!

AC Coupling should be near the edge connector to reduce
impedance discontinuities! 220nF for backwards compatibility!

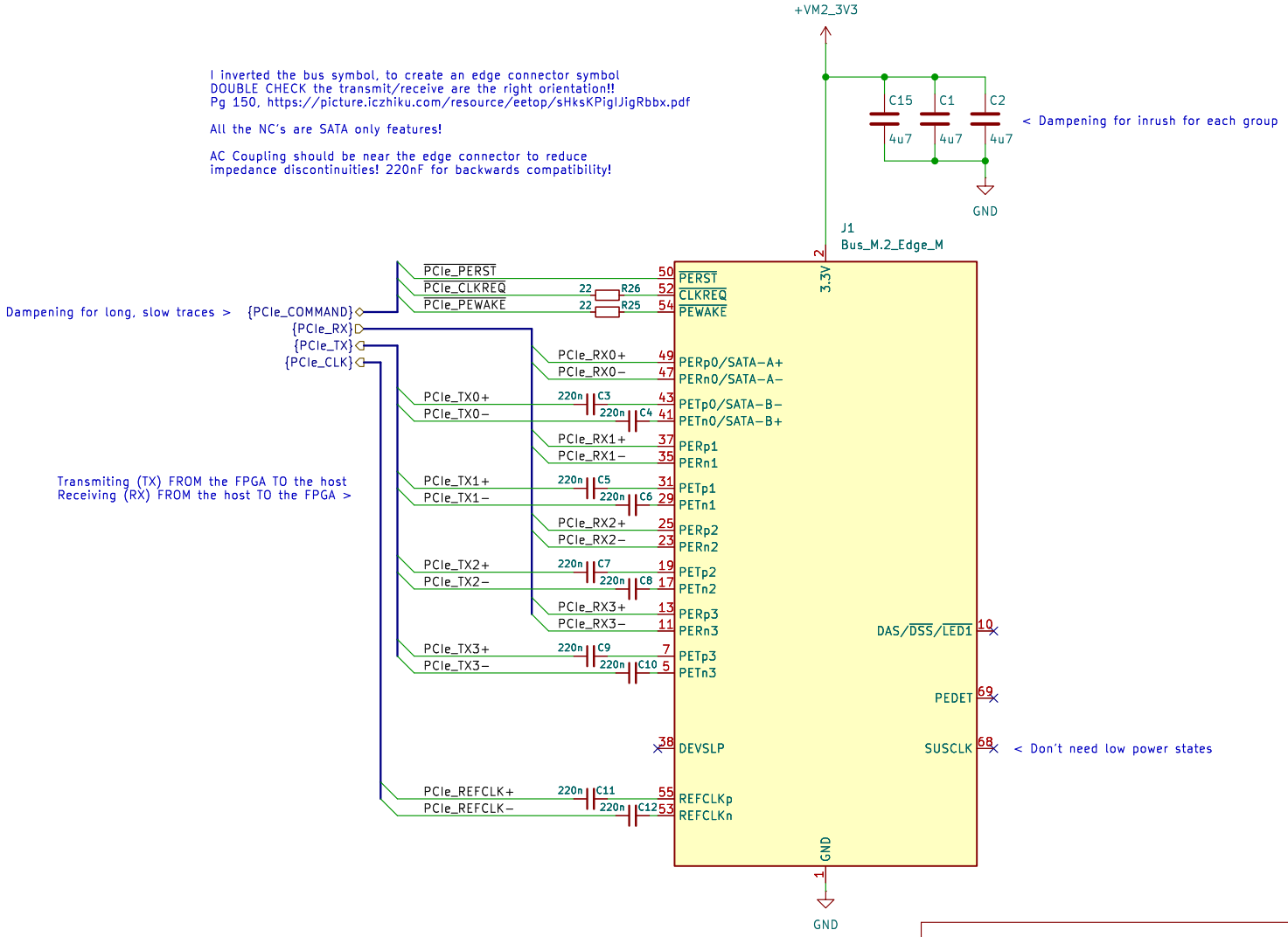

Sheet: /M.2 M−Key Edge Connector/
File: m.2−m−key.kicad_sch

Title:

Size: A4	Date:	**Rev:**
KiCad E.D.A. 9.0.6		Id: 2/11

Simulate beads in LTSpice!

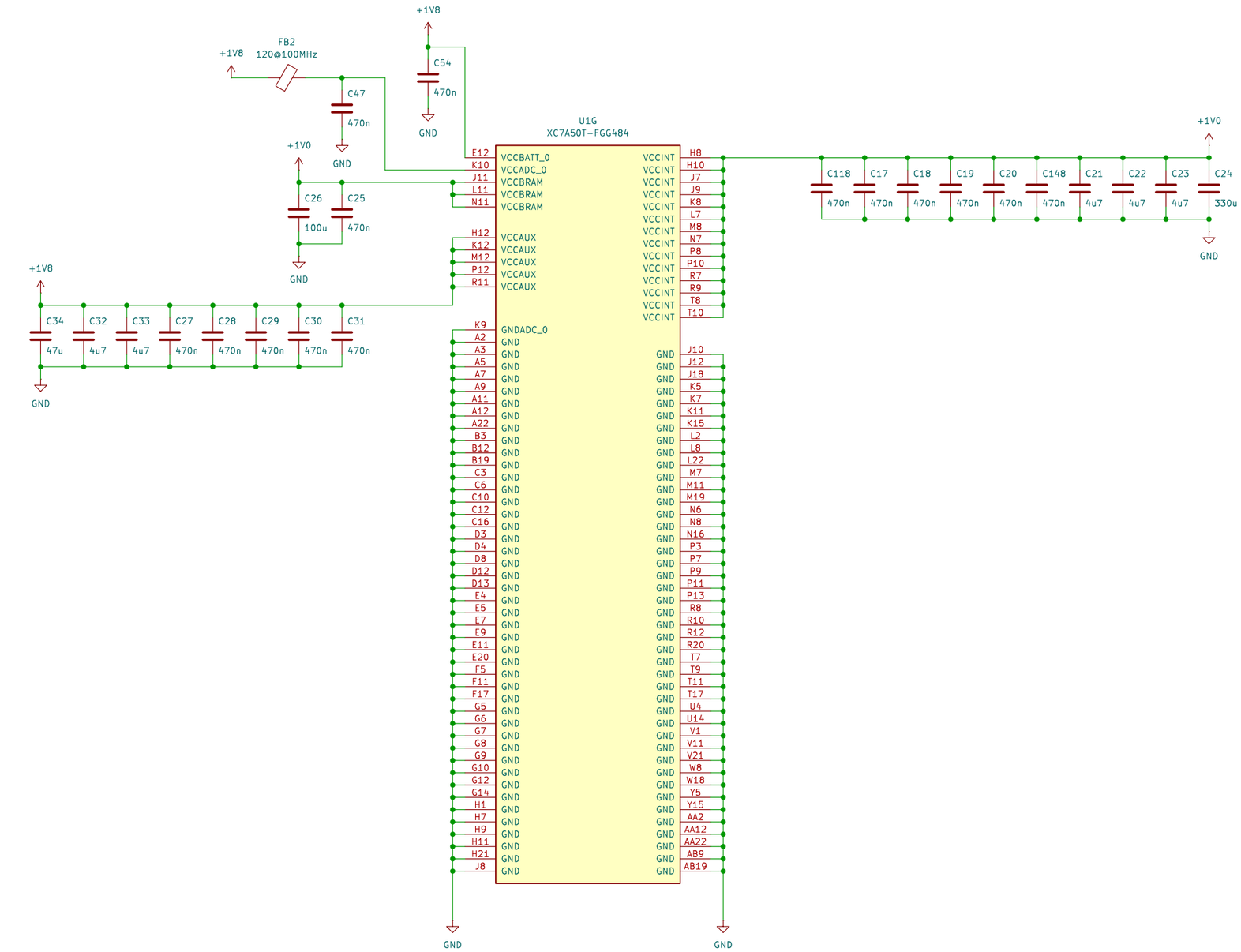

Decoupling before and after bead for high current rail!

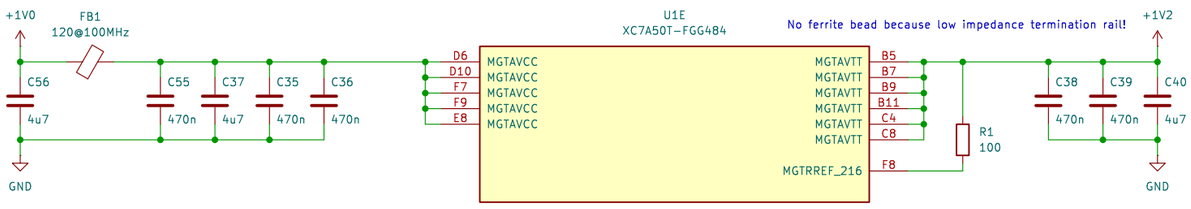

Sheet: /Artix 7 Power and Decoupling/
File: FPGA-power.kicad_sch

Title:

Size: A3	Date:	Rev:
KiCad E.D.A. 9.0.6		Id: 3/11

SEQUENCE VCC -> 1V0 -> 1V2 -> 1V8 -> 1V5

+VM2_3V3 is the M.2 3.3V power source
+VBUS_3V3 is the USB power source, bucked down

This circuit ensures that USB doesn't backfeed into the M.2 connector, frying the motherboard, and also prioritizes reliable M.2 connector power if both are plugged in!

Switchover is at 3.18V using PR1 voltage divider which is really optimal with 1% resistors because m.2 connector minimum voltage is 3.135V

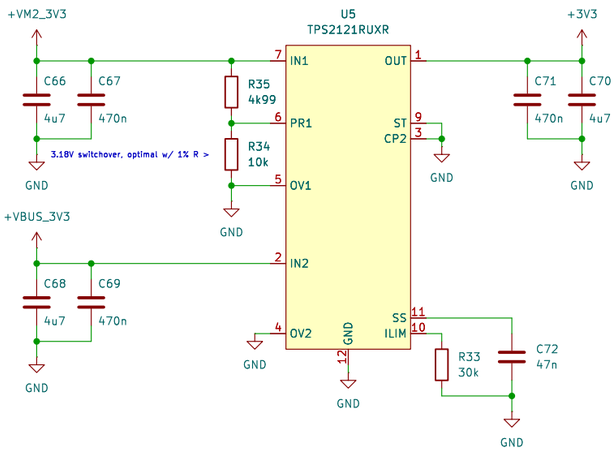

Around 1ms ramp up - 47nF
Around 3A min, 4A max current limiting

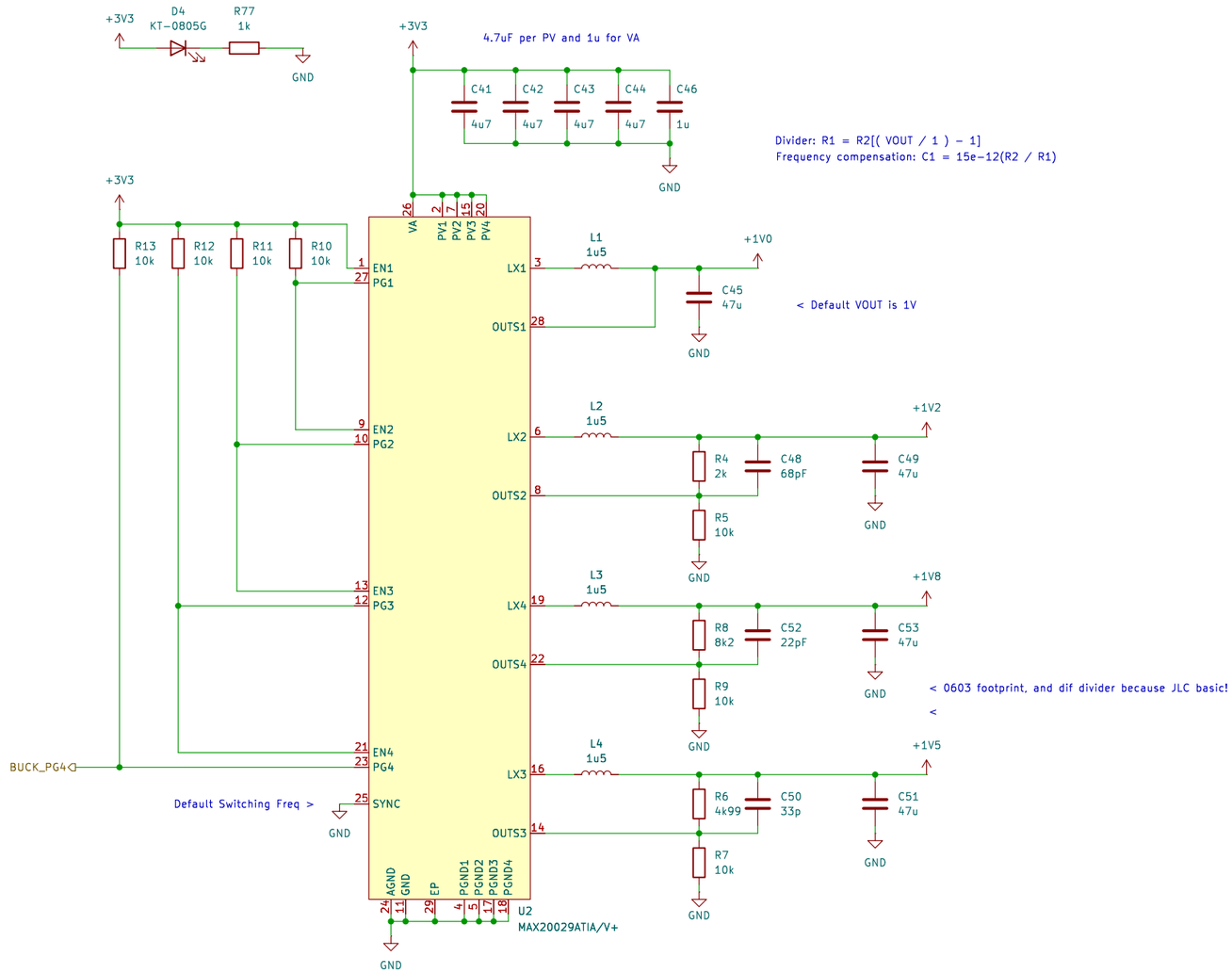

Sheet: /Power Input Regulation/
File: power.kicad_sch

Title:

Size: A3	Date:	Rev:
KiCad E.D.A. 9.0.6		Id: 4/11

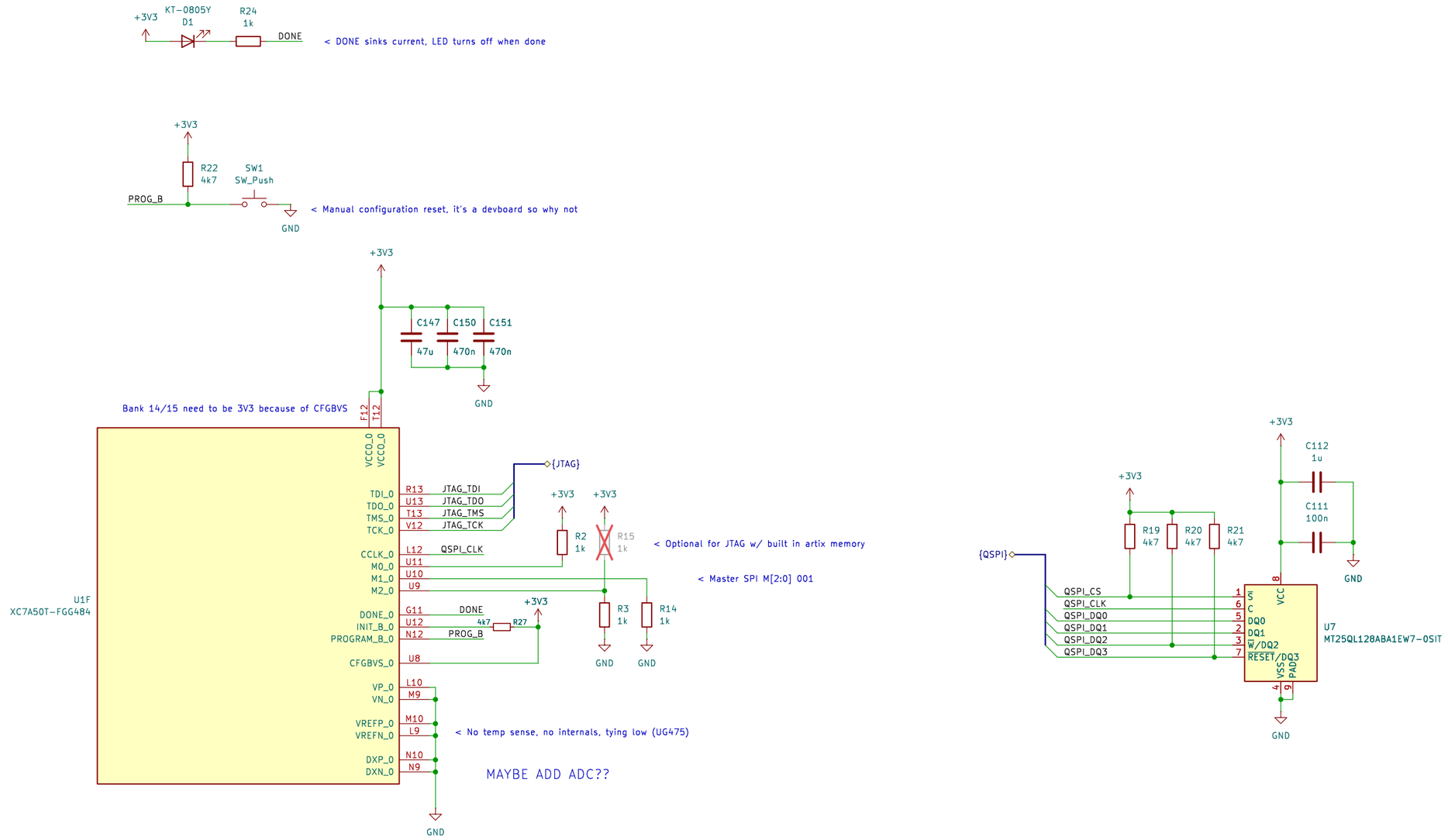

Sheet: /Artix 7 Configurations and Flash/
File: configurations.kicad_sch

Title:

Size: A3	Date:	Rev:
KiCad E.D.A. 9.0.6		Id: 5/11

Most of the NC's are usable as I/O's too,
even if they're configurations :)

47u + 2x 4u7 + 4x 470n capacitors per bank!

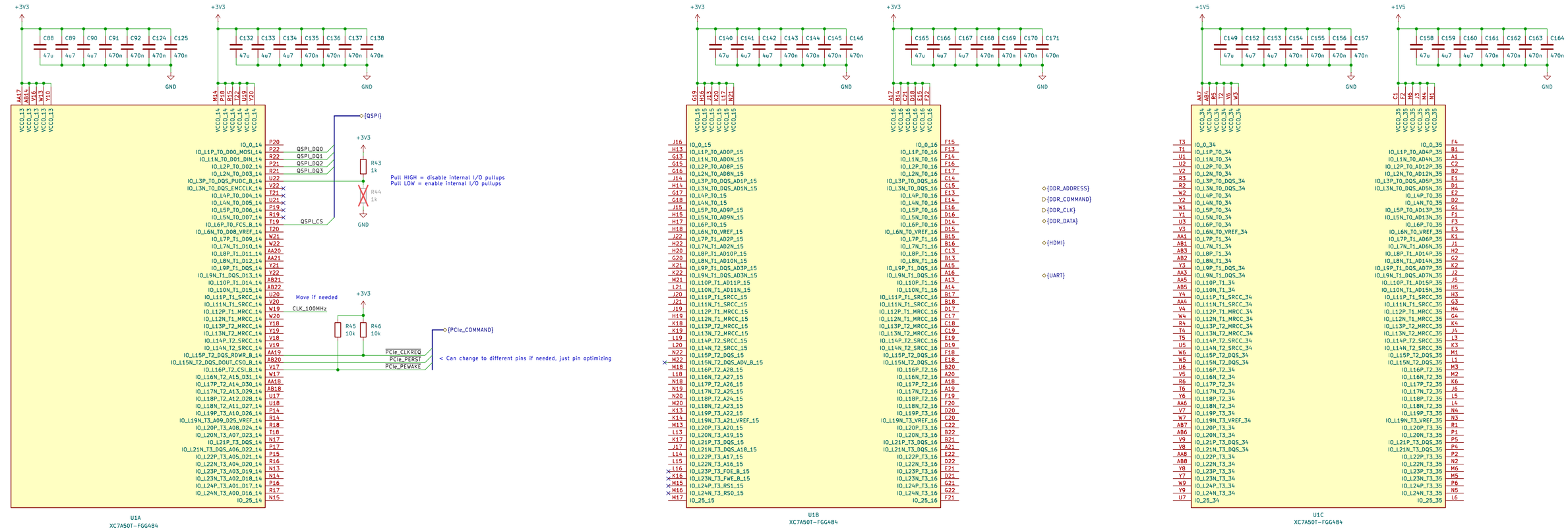

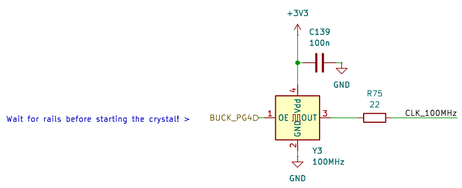

Sheet: /Artix 7 Banks/
File: banks.kicad_sch

Title:

Size: A2	Date:	Rev:
KiCad E.D.A. 9.0.6		Id: 6/11

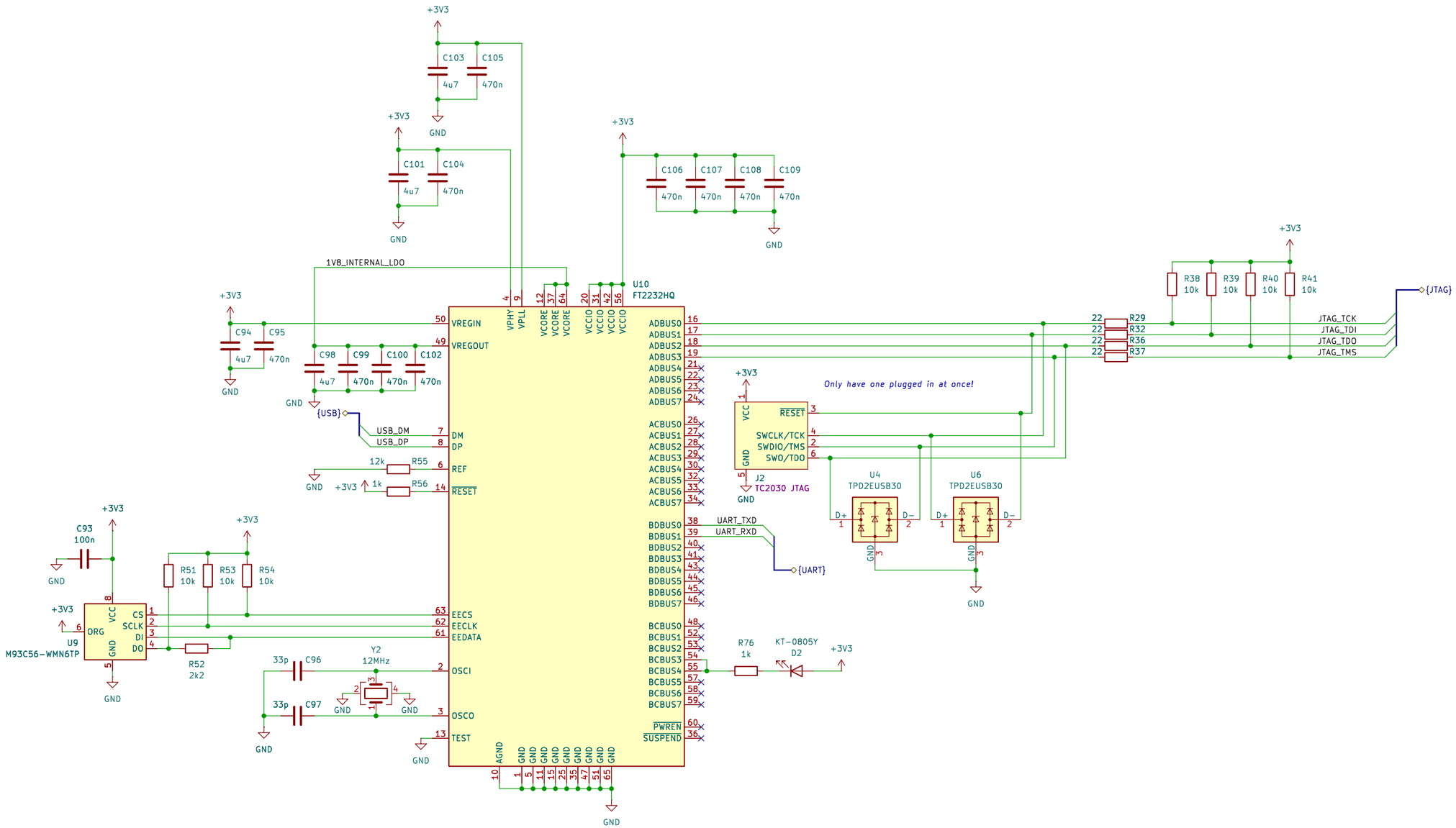

Sheet: /USB to JTAG/
File: usb.kicad_sch

Title:

Size: A3	Date:	Rev:
KiCad E.D.A. 9.0.6		Id: 7/11

MT41J128M16JT-125:K
16 Bit data width
8 Bank machines
Normal ordering

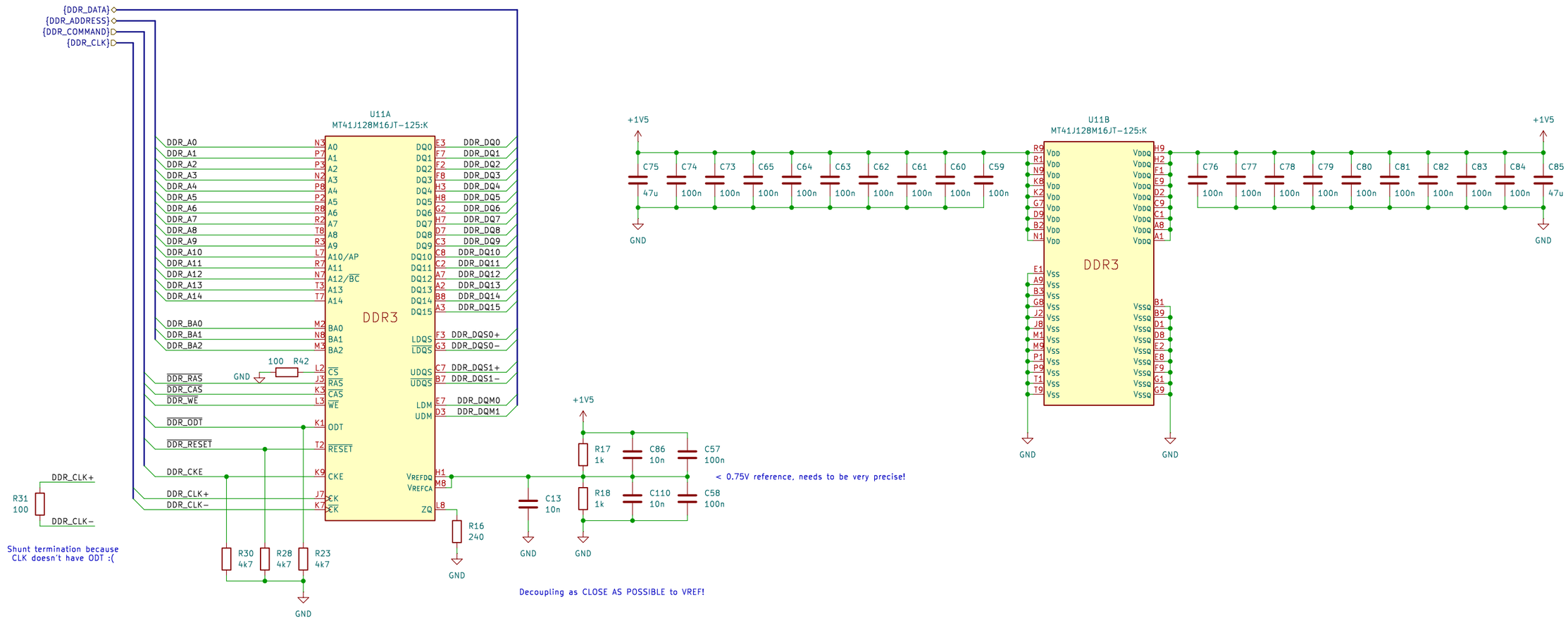

Sheet: /DDR3/
File: ddr3.kicad_sch

Title:

Size: A3	Date:	Rev:
KiCad E.D.A. 9.0.6		Id: 8/11

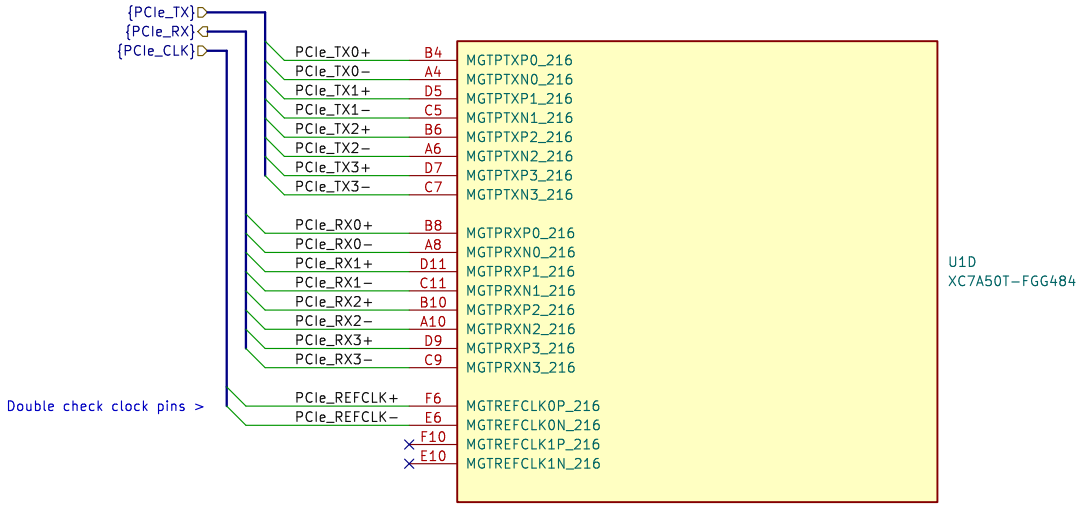

Sheet: /Artix 7 PCIe GTP Transceivers/
File: PCIe GTP Transceivers.kicad_sch

Title:

Size: A4	Date:	Rev:
KiCad E.D.A. 9.0.6		Id: 9/11

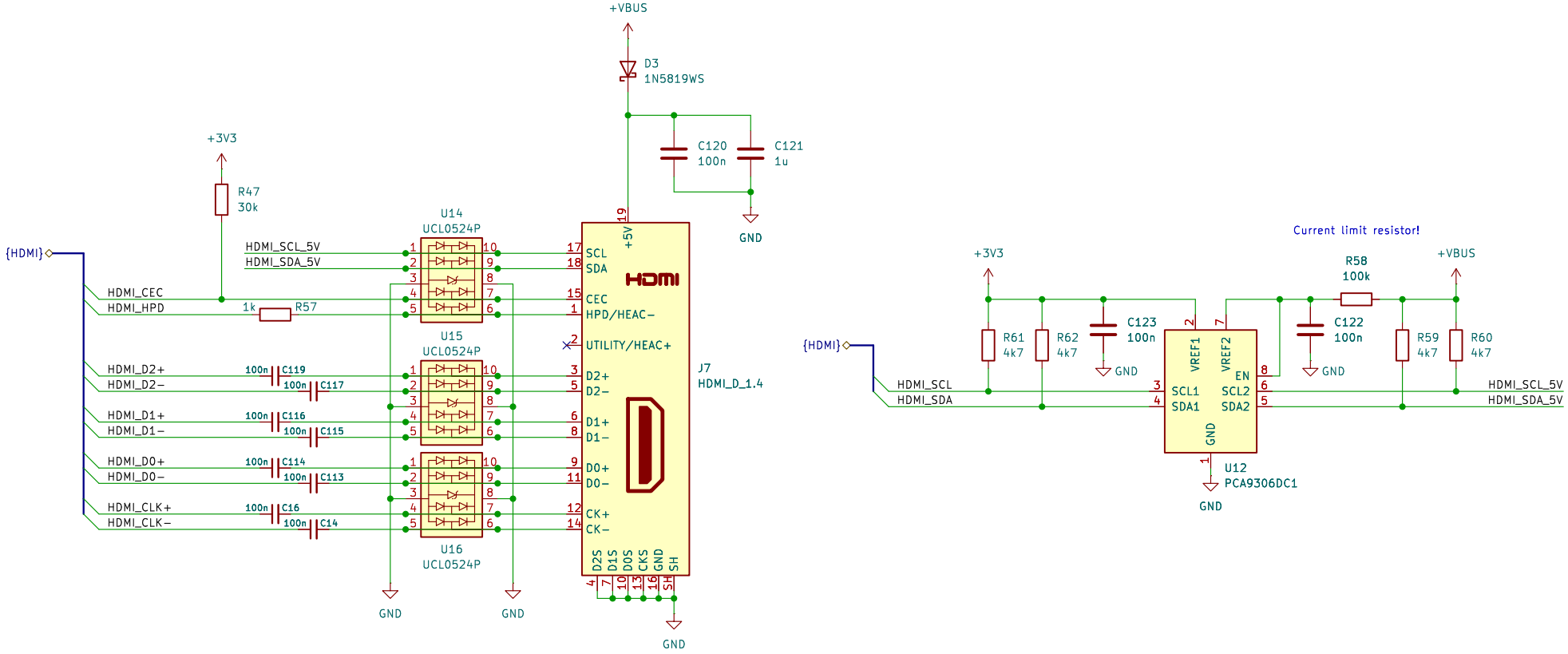

Sheet: /HDMI/
File: hdmi.kicad_sch

Title:

Size: A4	Date:	**Rev:**
KiCad E.D.A. 9.0.6		Id: 10/11

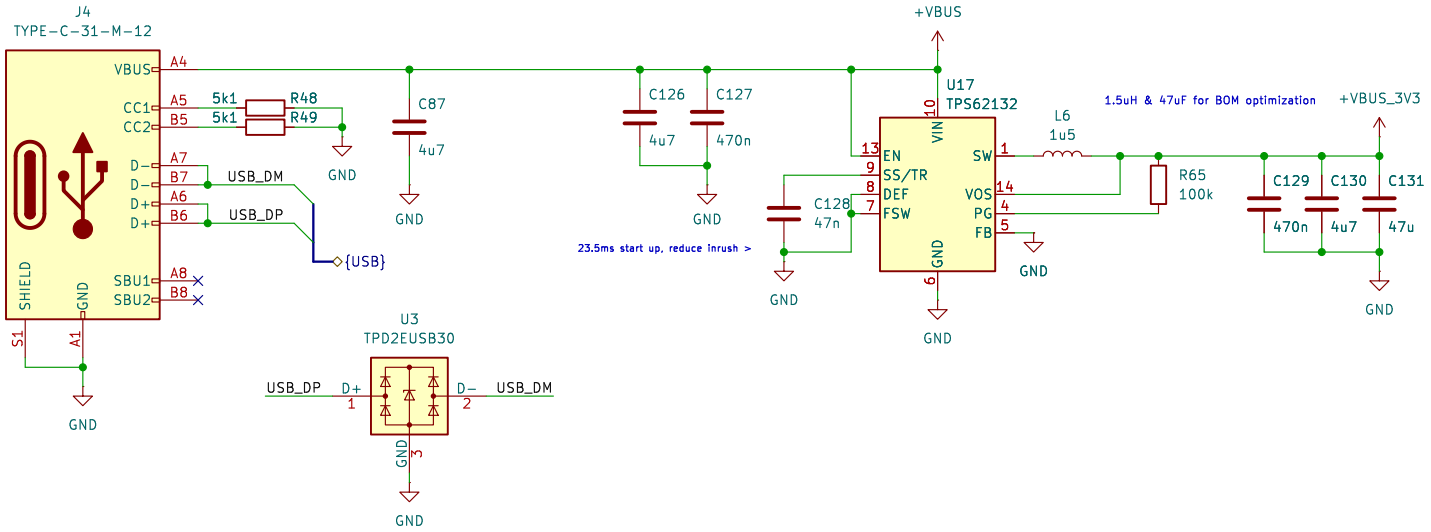

Sheet: /USB-C/
File: usb-c.kicad_sch

Title:

Size: A4	Date:	**Rev:**
KiCad E.D.A. 9.0.6		Id: 11/11