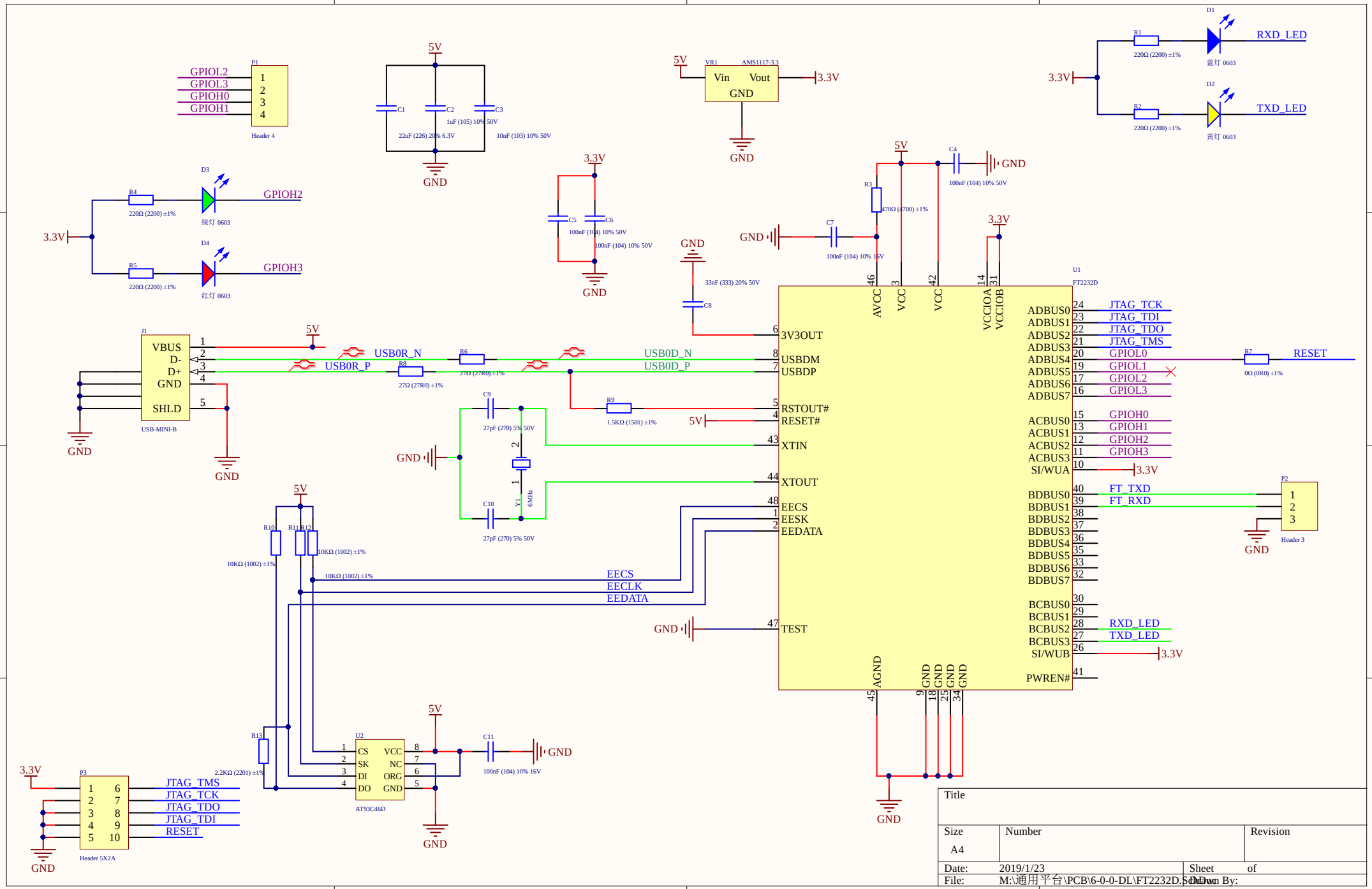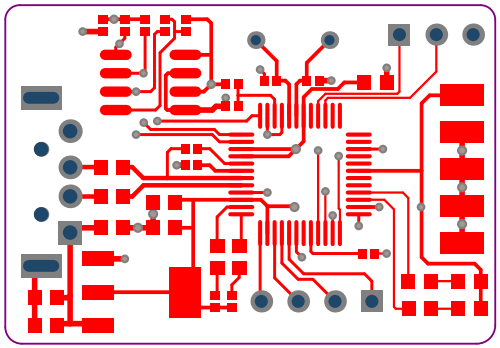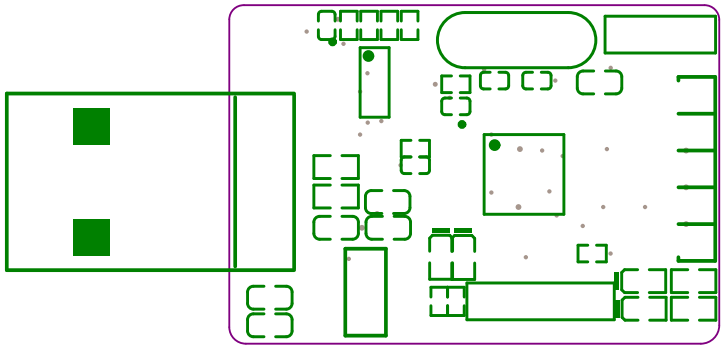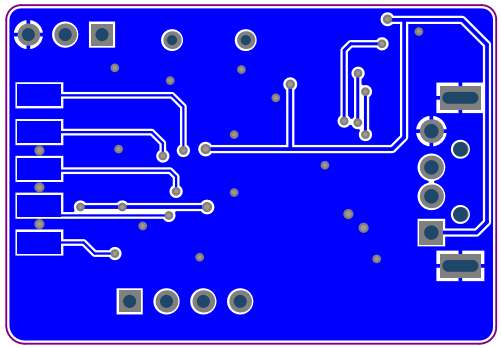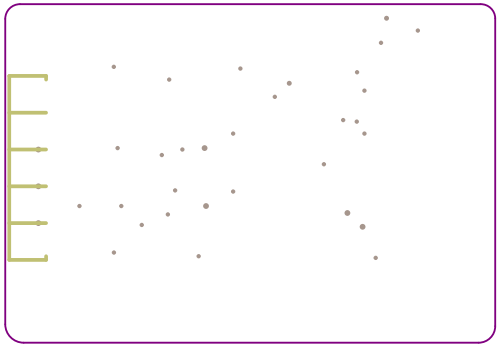
P1
GPIOL2
GPIOL3
GPIOH0
GPIOH1
Header 4
5V
C1
C2
C3
22uF (226) 20% 6.3V
1uF (105) 10% 50V
10nF (103) 10% 50V
GND
VR1
AMS1117-3.3
Vin
Vout
3.3V
D1
R1
220Ω (2200) ±1%
蓝灯 0603
RXD_LED
D2
R2
黄灯 0603
TXD_LED
D3
R4
绿灯 0603
GPIOH2
D4
R5
红灯 0603
GPIOH3
C5
C6
100nF (104) 10% 50V
C4
C7
R3
470Ω (4700) ±1%
C8
33nF (333) 20% 50V
U1
FT2232D
AVCC
VCC
VCCIOA
VCCIOB
3V3OUT
USBDM
USBDP
RSTOUT#
RESET#
XTIN
XTOUT
EECS
EESK
EEDATA
TEST
AGND
PWREN#
ADBUS0
ADBUS1
ADBUS2
ADBUS3
ADBUS4
ADBUS5
ADBUS6
ADBUS7
ACBUS0
ACBUS1
ACBUS2
ACBUS3
SI/WUA
BDBUS0
BDBUS1
BDBUS2
BDBUS3
BDBUS4
BDBUS5
BDBUS6
BDBUS7
BCBUS0
BCBUS1
BCBUS2
BCBUS3
SI/WUB
JTAG_TCK
JTAG_TDI
JTAG_TDO
JTAG_TMS
GPIOL0
GPIOL1
GPIOL2
GPIOL3
GPIOH0
GPIOH1
GPIOH2
GPIOH3
FT_TXD
FT_RXD
RXD_LED
TXD_LED
R7
0Ω (0R0) ±1%
RESET
J1
VBUS
D-
D+
GND
SHLD
USB-MINI-B
USB0R_N
USB0R_P
R6
27Ω (27R0) ±1%
R8
USB0D_N
USB0D_P
R9
1.5KΩ (1501) ±1%
C9
27pF (270) 5% 50V
C10
Y1
6MHz
P2
Header 3
R10
R11
R12
10KΩ (1002) ±1%
EECS
EECLK
EEDATA
R13
2.2KΩ (2201) ±1%
U2
CS
SK
DI
DO
VCC
NC
ORG
GND
AT93C46D
C11
100nF (104) 10% 16V
P3
JTAG_TMS
JTAG_TCK
JTAG_TDO
JTAG_TDI
RESET
Header 5X2A
Title
Size
A4
Number
Revision
Date: 2019/1/23
Sheet of
File: M:\通用平台\PCB\6-0-0-DL\FT2232D.SchDoc
Drawn By: