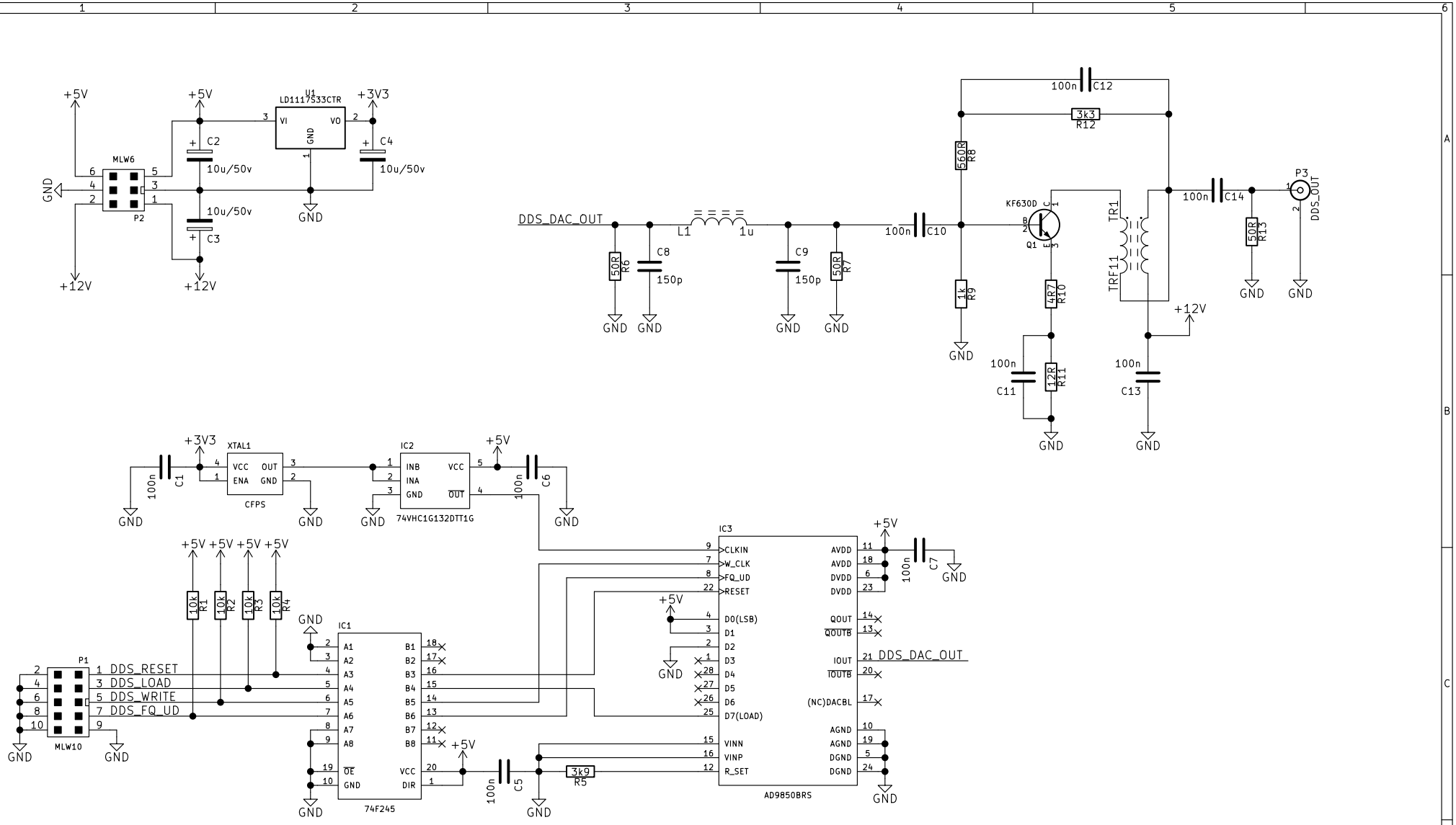

created by wykys

SPSEOL

Sheet: /

File: DDS.sch

Title: DDS with AD9850

Size: A4	Date:	**Rev: 2.0**
KiCad E.D.A. kicad 0.201503110816+550222ubuntu14.04.1-product		Id: 1/1