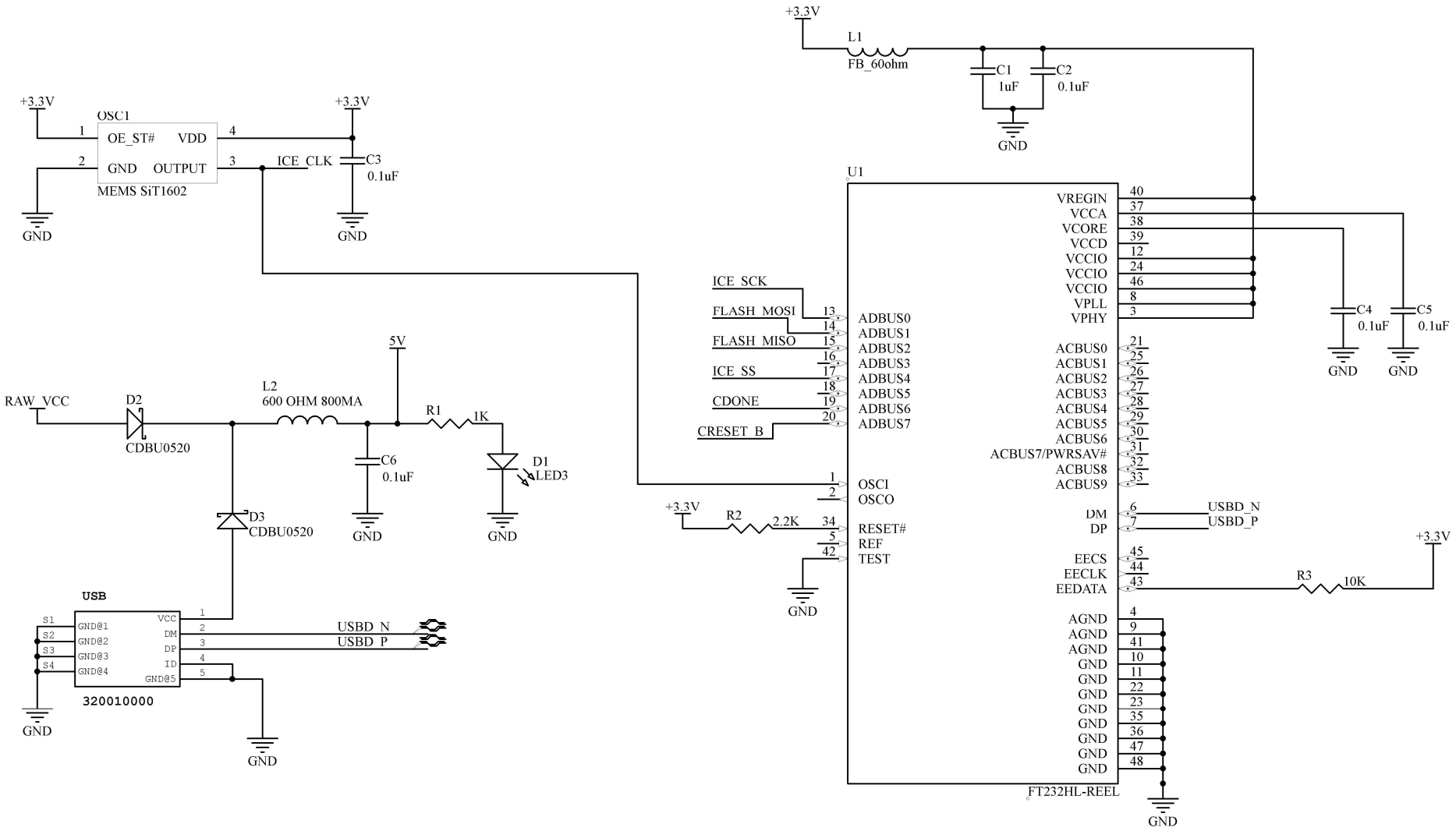

Title	FTDI Module	ITBA - CIDEI - PC - GC	Pablo Cossutta Gonzalo Castelli
Size A4	Number		Revision 2.0
Date:	12/14/2018	Sheet of	
File:	C:\Users\..\FTDI.SchDoc	Drawn By:	