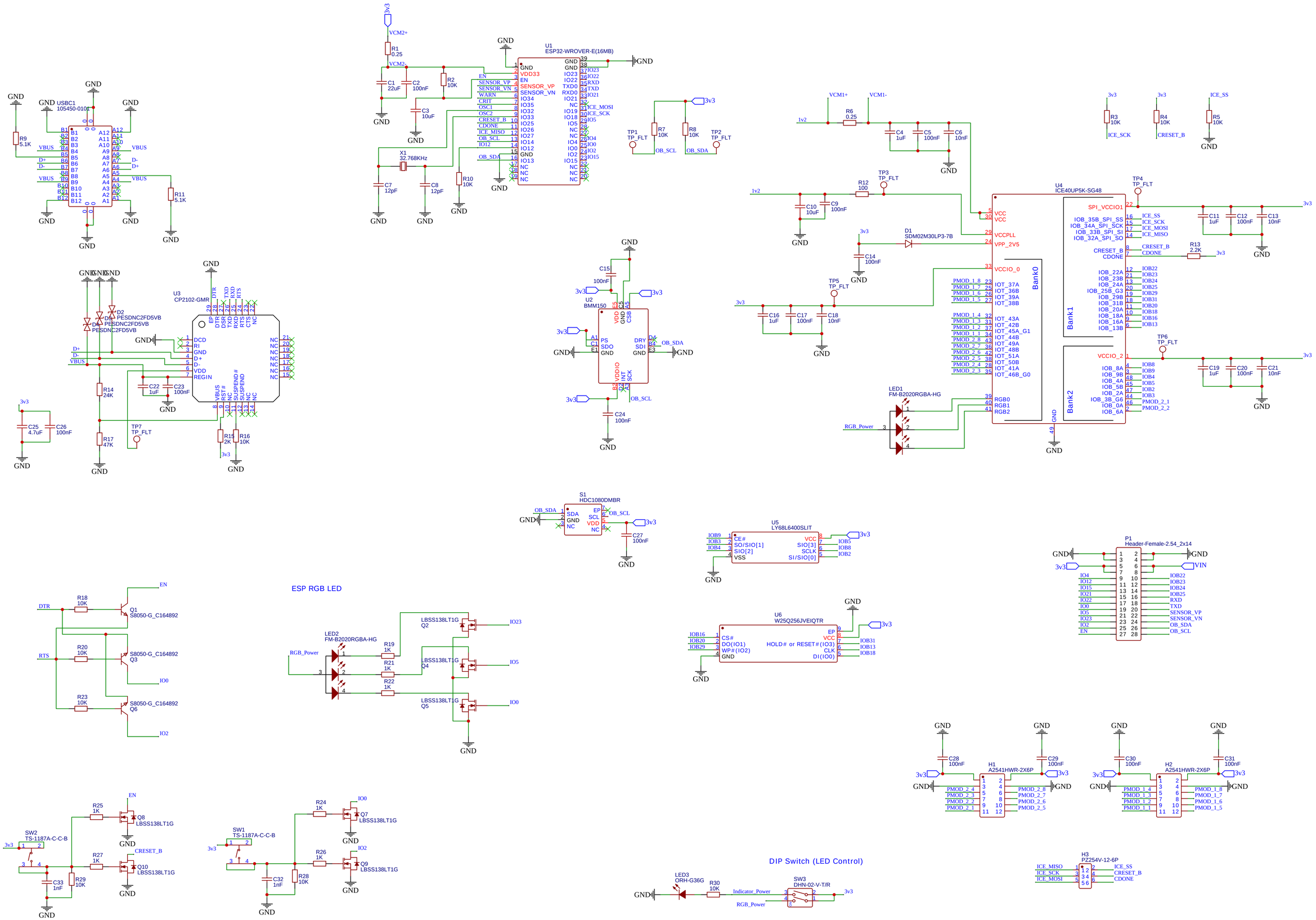
USBC1
105450-0101
U1
ESP32-WROVER-E(16MB)
U2
BMM150
U3
CP2102-GMR
U4
ICE40UP5K-SG48
Bank0
Bank1
Bank2
U5
LY68L6400SLIT
U6
W25Q256JVEIQTR
S1
HDC1080DMBR
P1
Header-Female-2.54_2x14
H1
A2541HWR-2X6P
H2
A2541HWR-2X6P
H3
PZ254V-12-6P
LED1
FM-B2020RGBA-HG
LED2
FM-B2020RGBA-HG
ESP RGB LED
DIP Switch (LED Control)
SW1
TS-1187A-C-C-B
SW2
TS-1187A-C-C-B
SW3
DHN-02-V-T/R
LED3
ORH-G36G
X1
32.768KHz
D1
SDM02M30LP3-7B
D2
PESDNC2FD5VB
D3
PESDNC2FD5VB
D4
PESDNC2FD5VB
Q1
S8050-G_C164892
Q3
S8050-G_C164892
Q6
S8050-G_C164892
Q7
LBSS138LT1G
Q8
LBSS138LT1G
Q9
LBSS138LT1G
Q10
LBSS138LT1G
LBSS138LT1G
Q2
LBSS138LT1G
Q4
LBSS138LT1G
Q5
TP1
TP_FLT
TP2
TP_FLT
TP3
TP_FLT
TP4
TP_FLT
TP5
TP_FLT
TP6
TP_FLT
TP7
TP_FLT
3v3
GND
VCM2+
VCM2-
VCM1+
VCM1-
1v2
VBUS
D+
D-
EN
SENSOR_VP
SENSOR_VN
WARN
CRIT
OSC1
OSC2
CRESET_B
CDONE
ICE_MISO
OB_SCL
IO12
OB_SDA
ICE_MOSI
ICE_SCK
ICE_SS
CRESET_B
RGB_Power
Indicator_Power
VIN
IO0
IO2
IO5
IO23
IO22
RXD
TXD
IO21
IO19
IO18
IO15
IO13
IO4
IO14
IO27
IO26
IO25
IO33
IO32
IO35
IOB22
IOB23
IOB24
IOB25
IOB29
IOB31
IOB13
IOB18
IOB8
IOB5
IOB2
IOB9
IOB3
IOB4
IOB16
IOB20
IOB29
PMOD_2_2
PMOD_2_1
PMOD_1_8
PMOD_1_7
PMOD_1_6
PMOD_1_5
PMOD_1_4
PMOD_1_3
PMOD_1_2
PMOD_1_1
PMOD_2_4
PMOD_2_3
PMOD_2_8
PMOD_2_7
PMOD_2_6
PMOD_2_5
R1 0.25
R2 10K
R3 10K
R4 10K
R5 10K
R6 0.25
R7 10K
R8 10K
R9 5.1K
R10 10K
R11 5.1K
R12 100
R13 2.2K
R14 24K
R15 2K
R16 10K
R17 47K
R18 10K
R19 1K
R20 10K
R21 1K
R22 1K
R23 10K
R24 1K
R25 1K
R26 1K
R27 1K
R28 10K
R29 10K
R30 10K
C1 22uF
C2 100nF
C3 10uF
C4 1uF
C5 100nF
C6 10nF
C7 12pF
C8 12pF
C9 100nF
C10 10uF
C11 1uF
C12 100nF
C13 10nF
C14 100nF
C15 100nF
C16 1uF
C17 100nF
C18 10nF
C19 1uF
C20 100nF
C21 10nF
C22 1uF
C23 100nF
C24 100nF
C25 4.7uF
C26 100nF
C27 100nF
C28 100nF
C29 100nF
C30 100nF
C31 100nF
C32 1nF
C33 1nF
TITLE:
main
REV: 1.1
Company: N/A
Sheet: 1/1
Date: 2020-09-18
Drawn By: Darius Lukas
EasyEDA

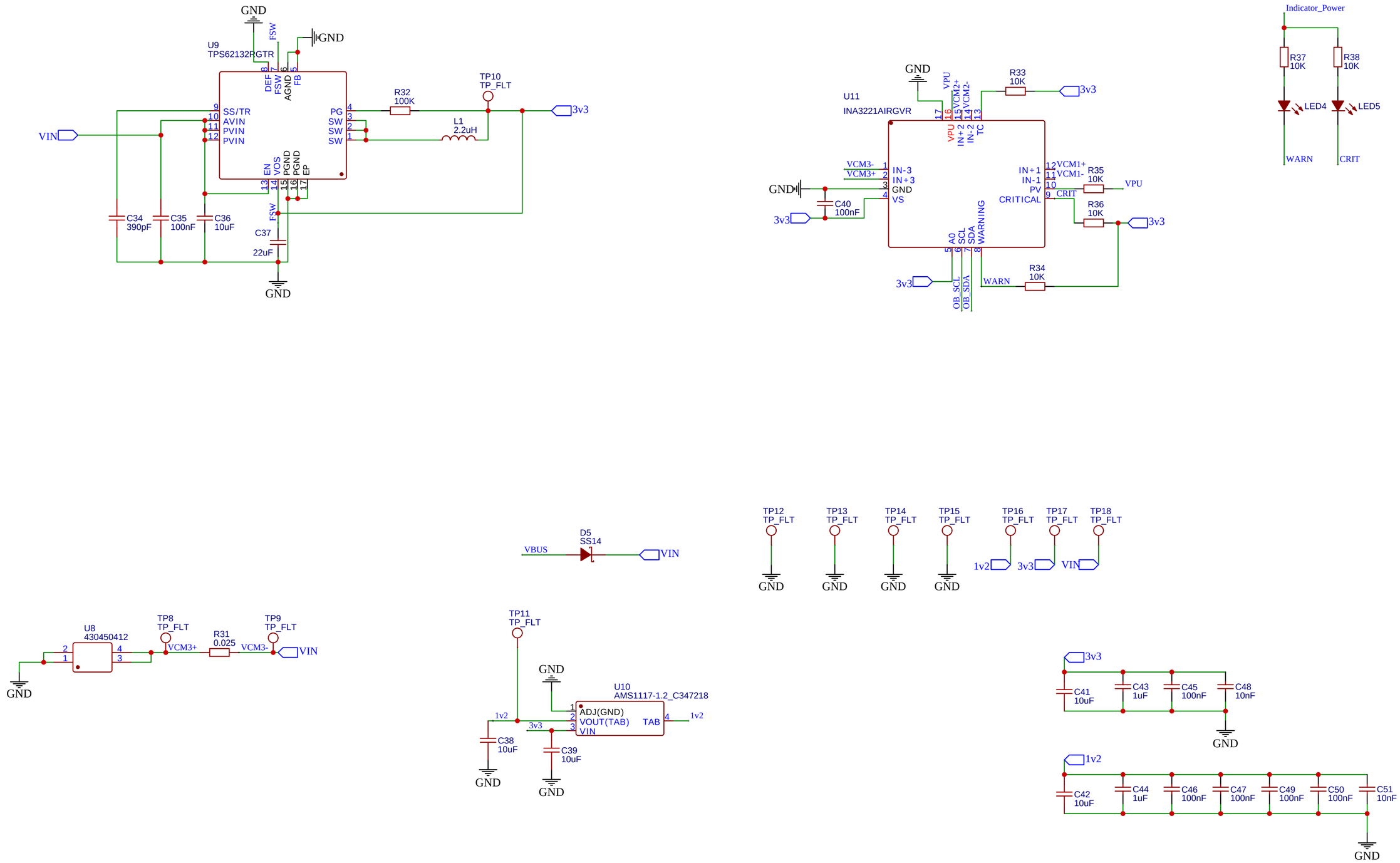

TITLE: power	REV: 1.1
Company: N/A	Sheet: 1/1
Date: 2020-09-20	Drawn By: Darius Lukas

EasyEDA