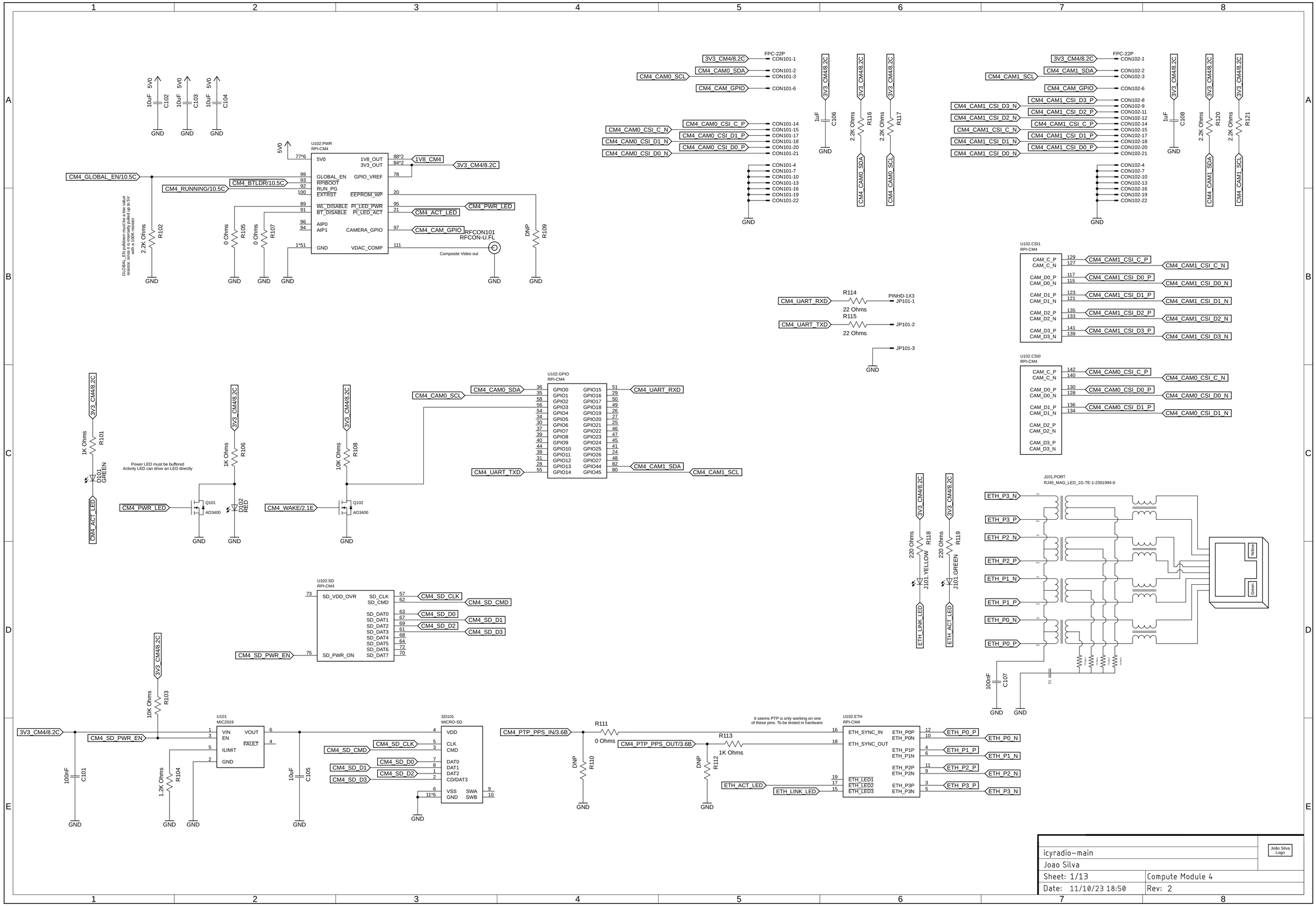
U102.PWR
RPI-CM4
U102.GPIO
RPI-CM4
U102.SD
RPI-CM4
U102.CSI1
RPI-CM4
U102.CSI0
RPI-CM4
U102.ETH
RPI-CM4
U101
MIC2019
SD101
MICRO-SD
J101.PORT
RJ45_MAG_LED_1G-TE-1-2301994-0
FPC-22P
RFCON101
RFCON-U.FL
Composite Video out
PINHD-1X3
Q101
AO3400
Q102
AO3400
Power LED must be buffered
Activity LED can drive an LED directly
It seems PTP is only working on one
of these pins. To be tested in hardware.
GLOBAL_EN pulldown must be a low value
resistor, since it is internally pulled up to 5V
with a 100K resistor
icyradio-main
Joao Silva
Sheet: 1/13
Compute Module 4
Date: 11/10/23 18:50
Rev: 2
João Silva
Logo

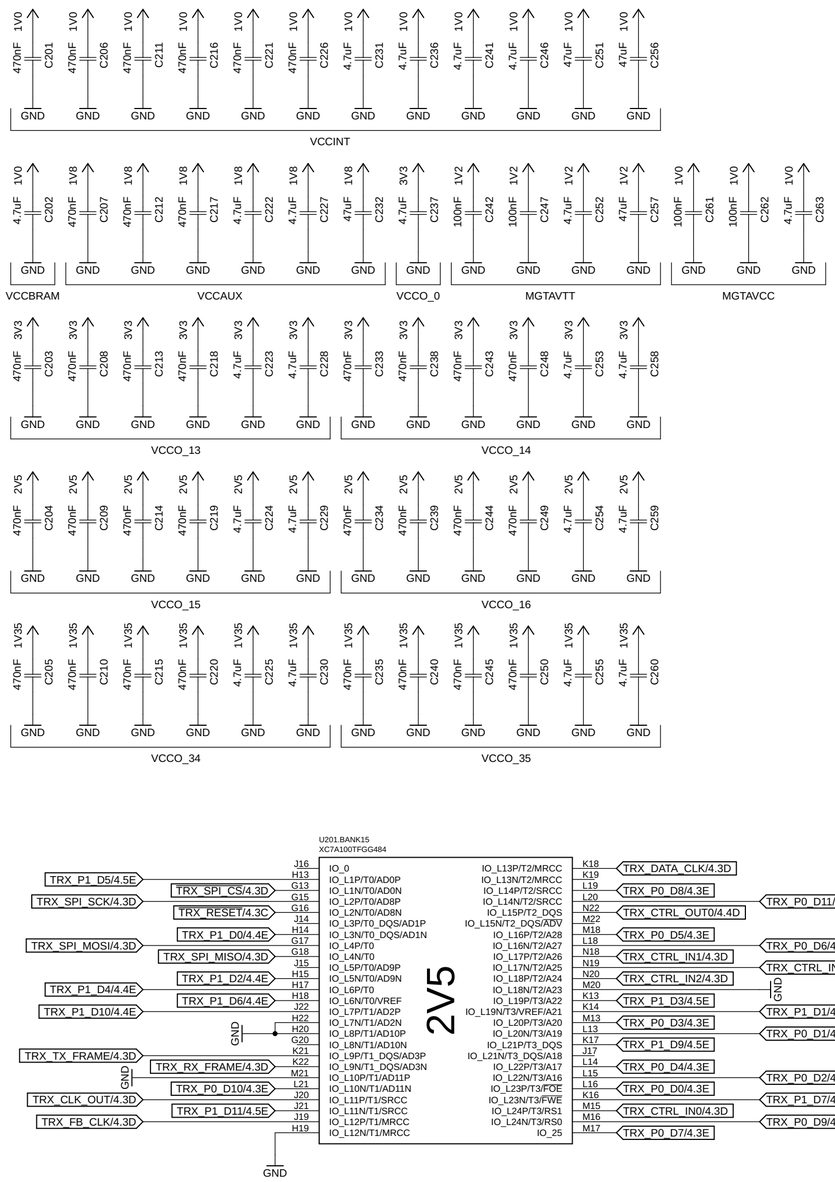

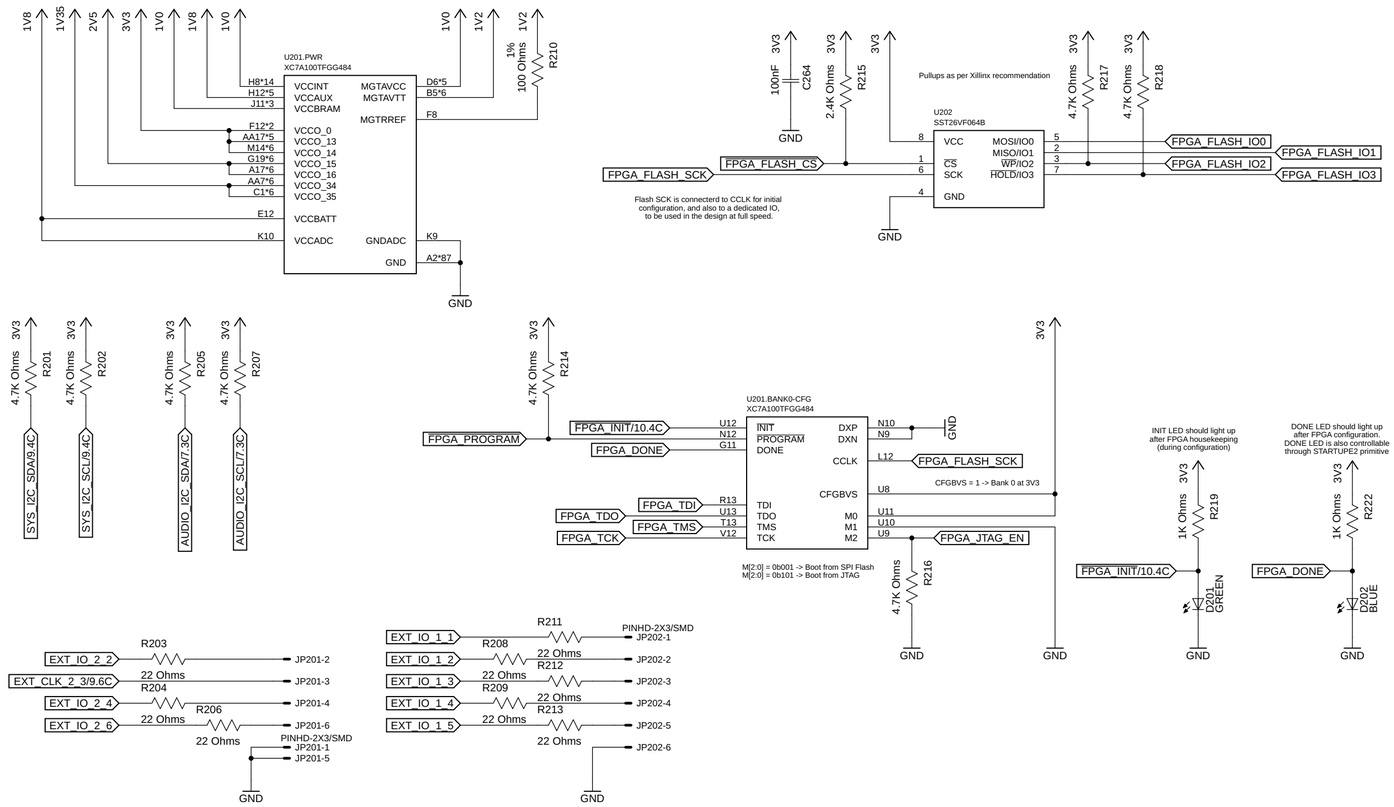

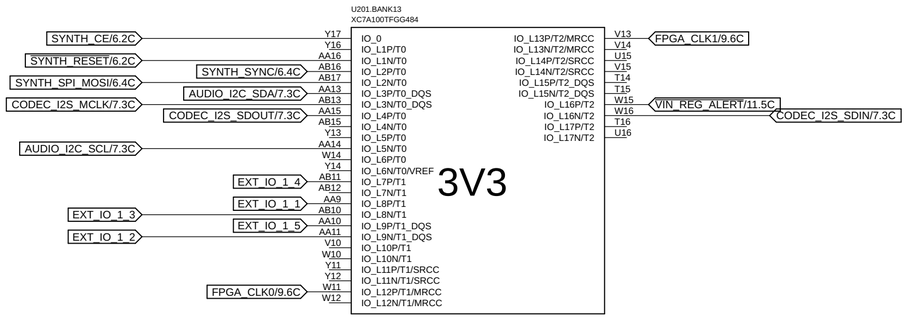

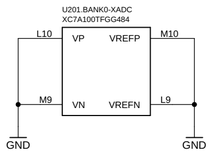

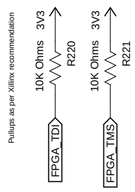

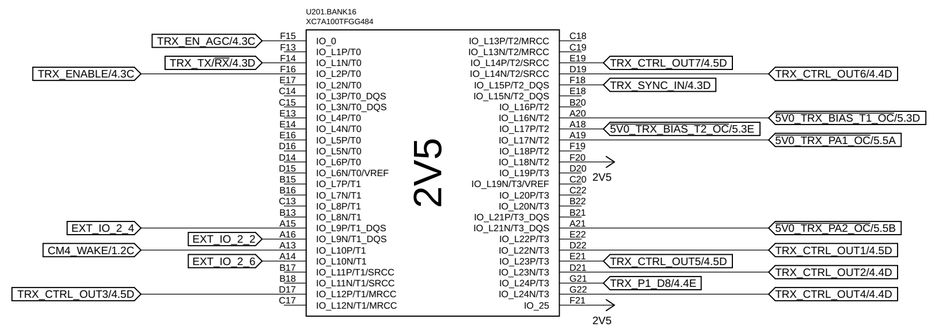

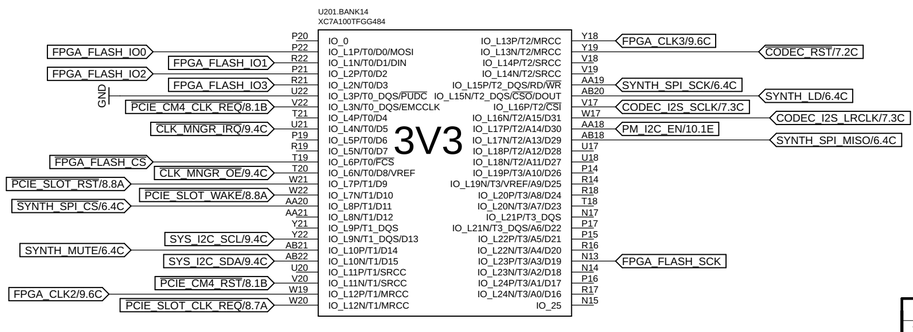

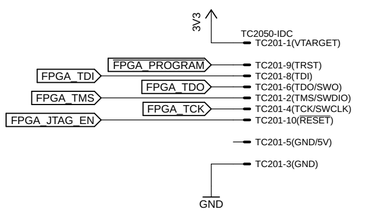

icyradio-main

Joao Silva

Sheet: 2/13 | FPGA

Date: 11/10/23 18:50 | Rev: 2

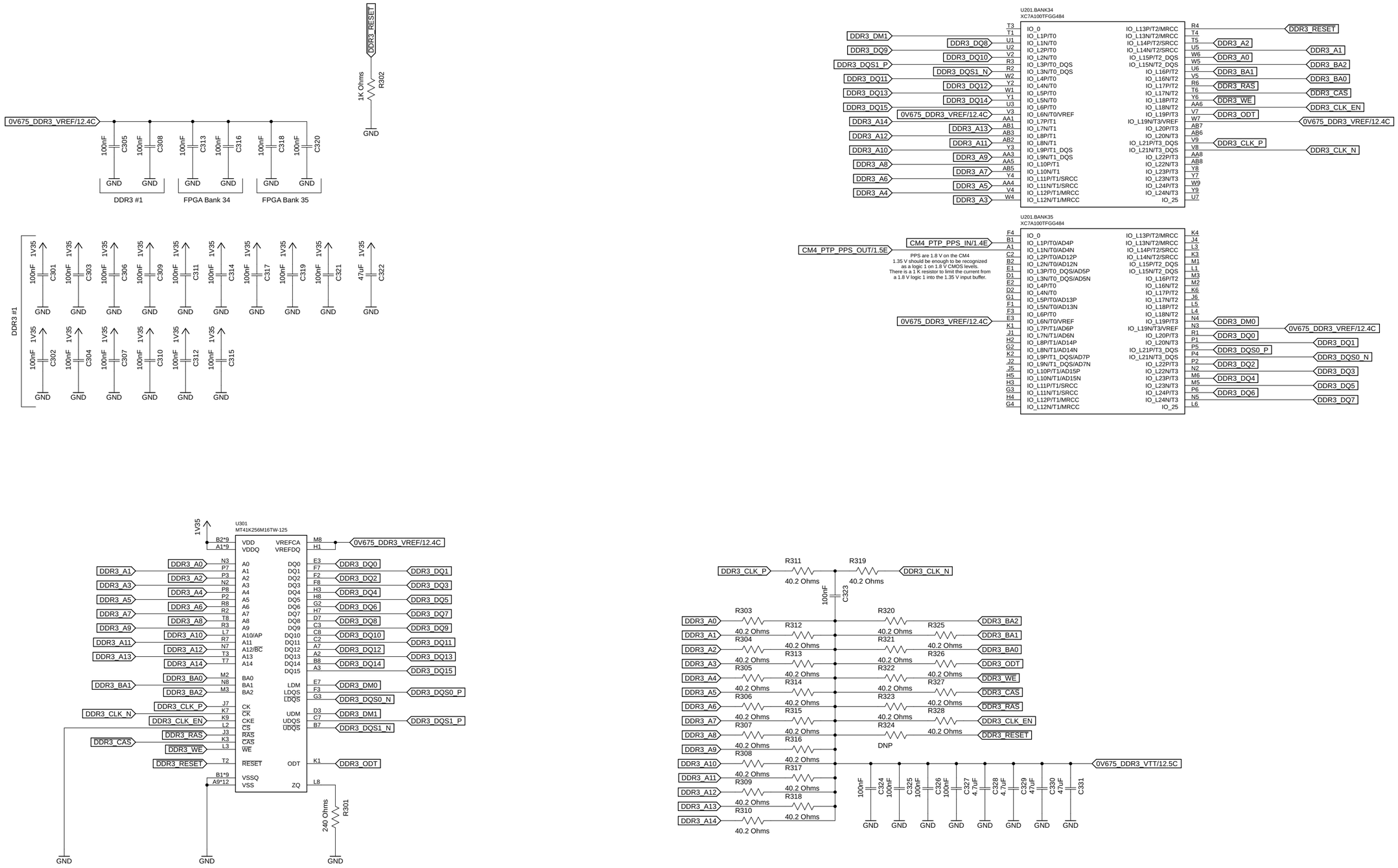

icyradio-main	
Joao Silva	
Sheet: 3/13	DDR3
Date: 11/10/23 18:50	Rev: 2

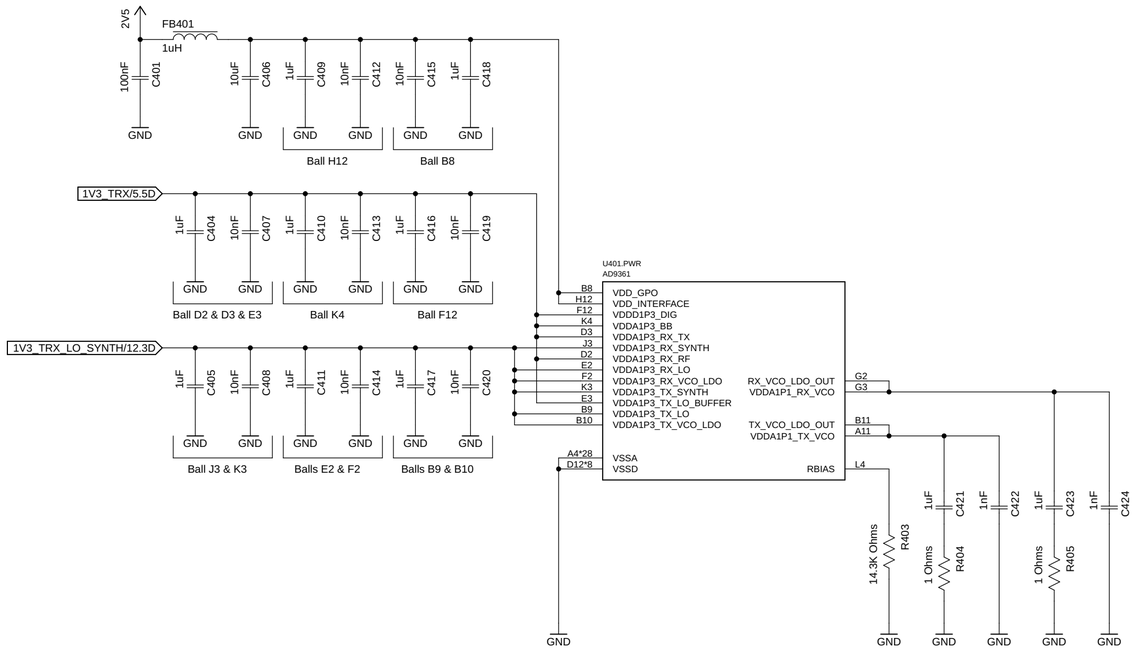

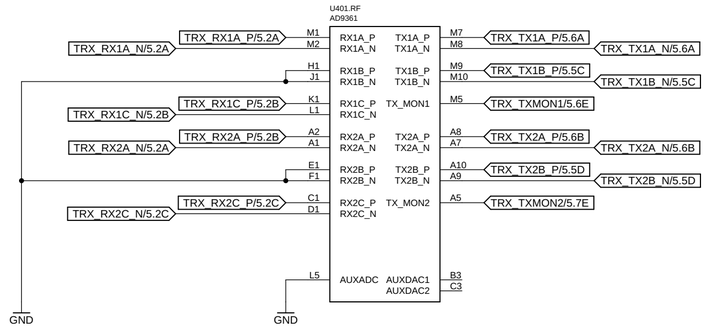

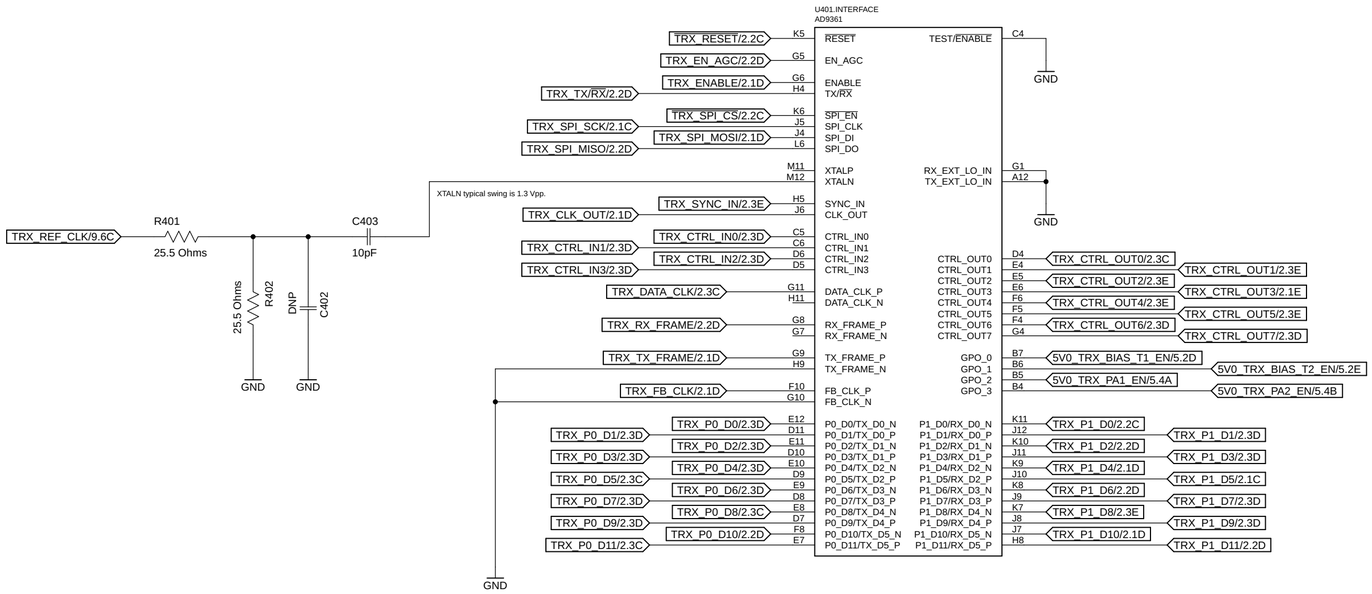

GPOs are used to control the power switches to the Bias-Ts and PAs.
GPO0 should be used for RX Bias-T on channel 1
GPO1 should be used for RX Bias-T on channel 2
This is because those are able to be mapped to gain table bits, facilitating the use of external LNAs.
There is no specific GPO assignment required for PA bias.

Warning: Always use DC blocks when connecting to the RX inputs with Bias-Ts, if the equipment cannot tolerate a DC voltage. This is because, by default, the Bias-Ts are enabled on transceiver reset!

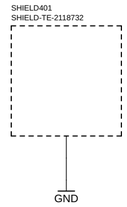

icyradio-main	
Joao Silva	
Sheet: 4/13	RF Transceiver
Date: 11/10/23 18:50	Rev: 2

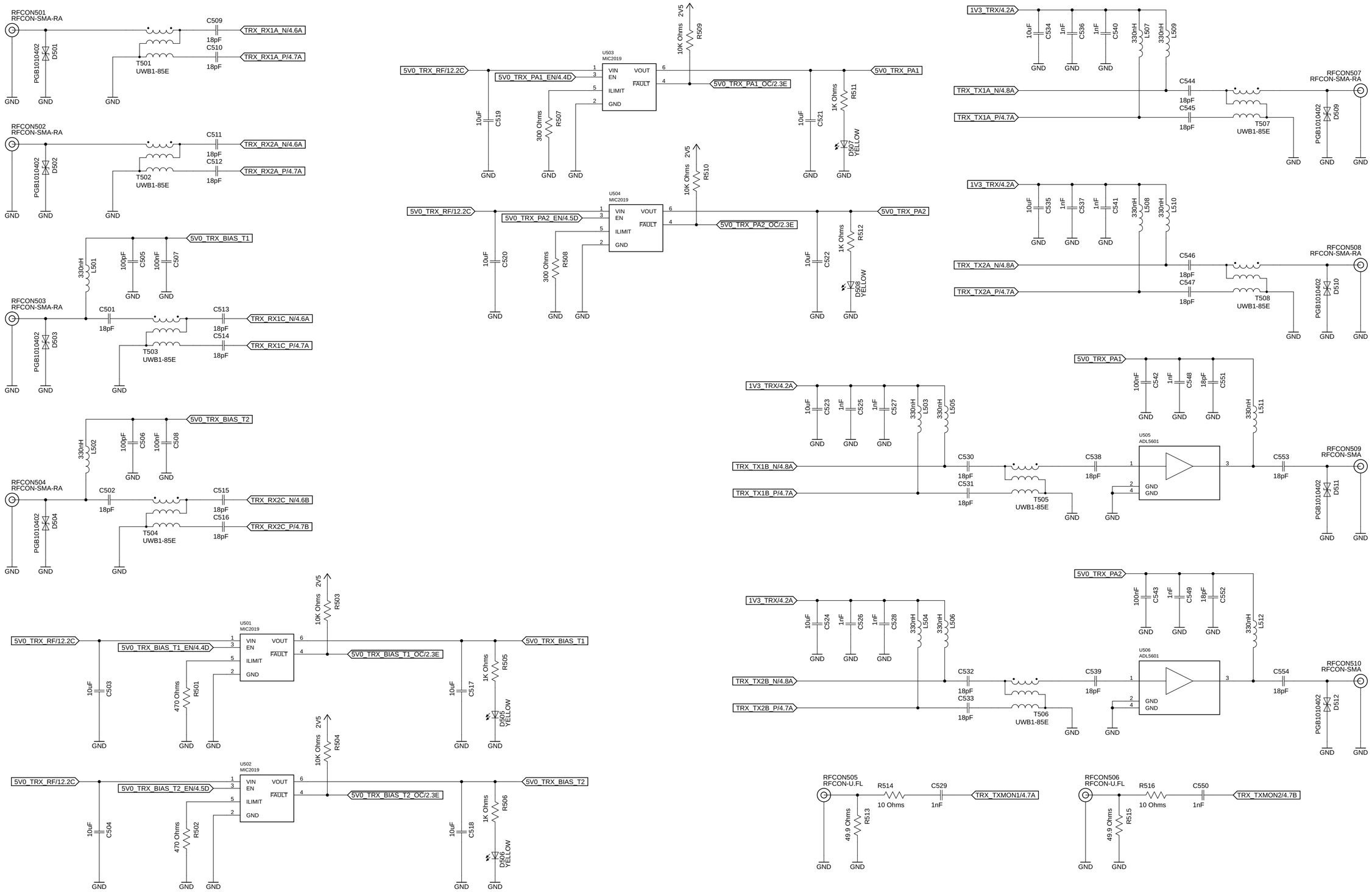

icyradio-main	
Joao Silva	
Sheet: 5/13	RF Interface
Date: 11/10/23 18:50	Rev: 2

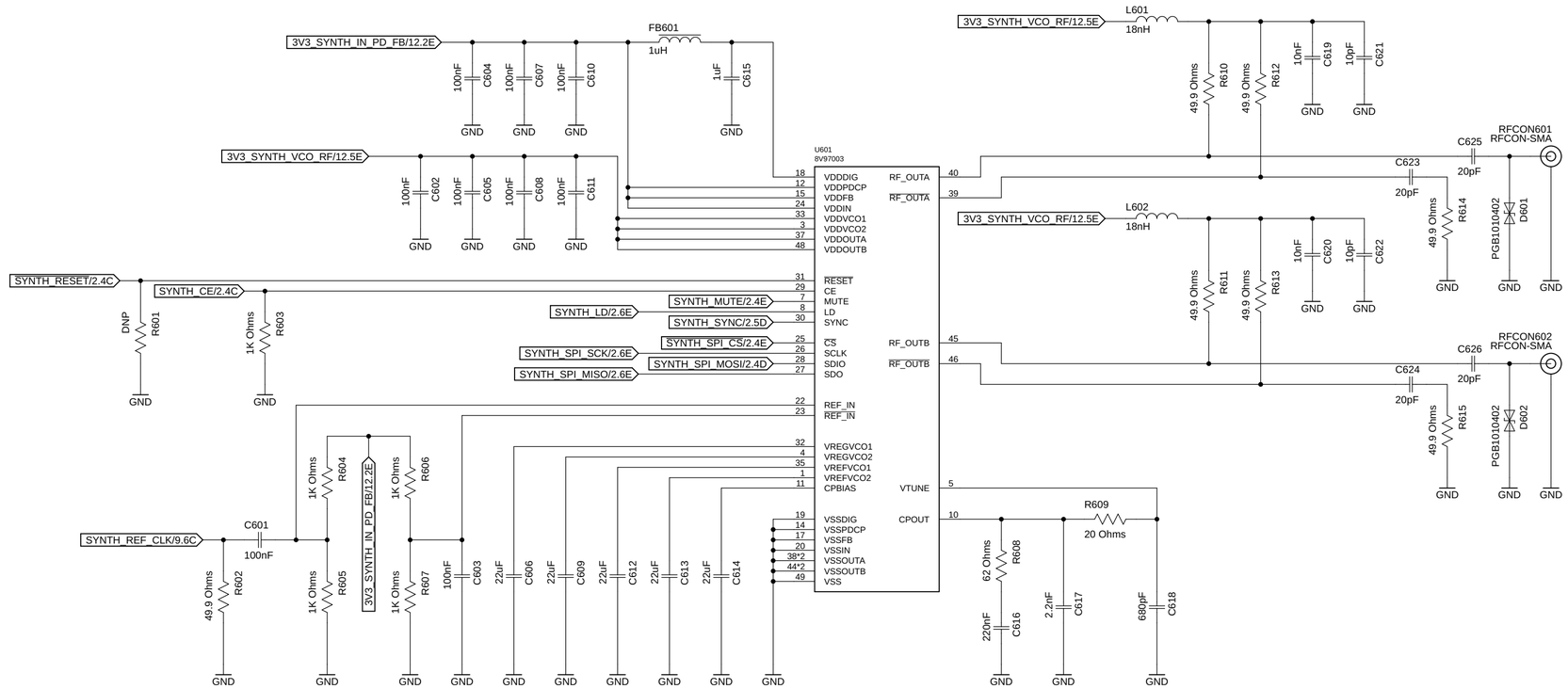

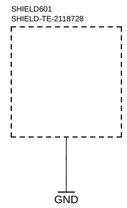

icyradio-main	
Joao Silva	
Sheet: 6/13	mmWave Synthesizer
Date: 11/10/23 18:50	Rev: 2

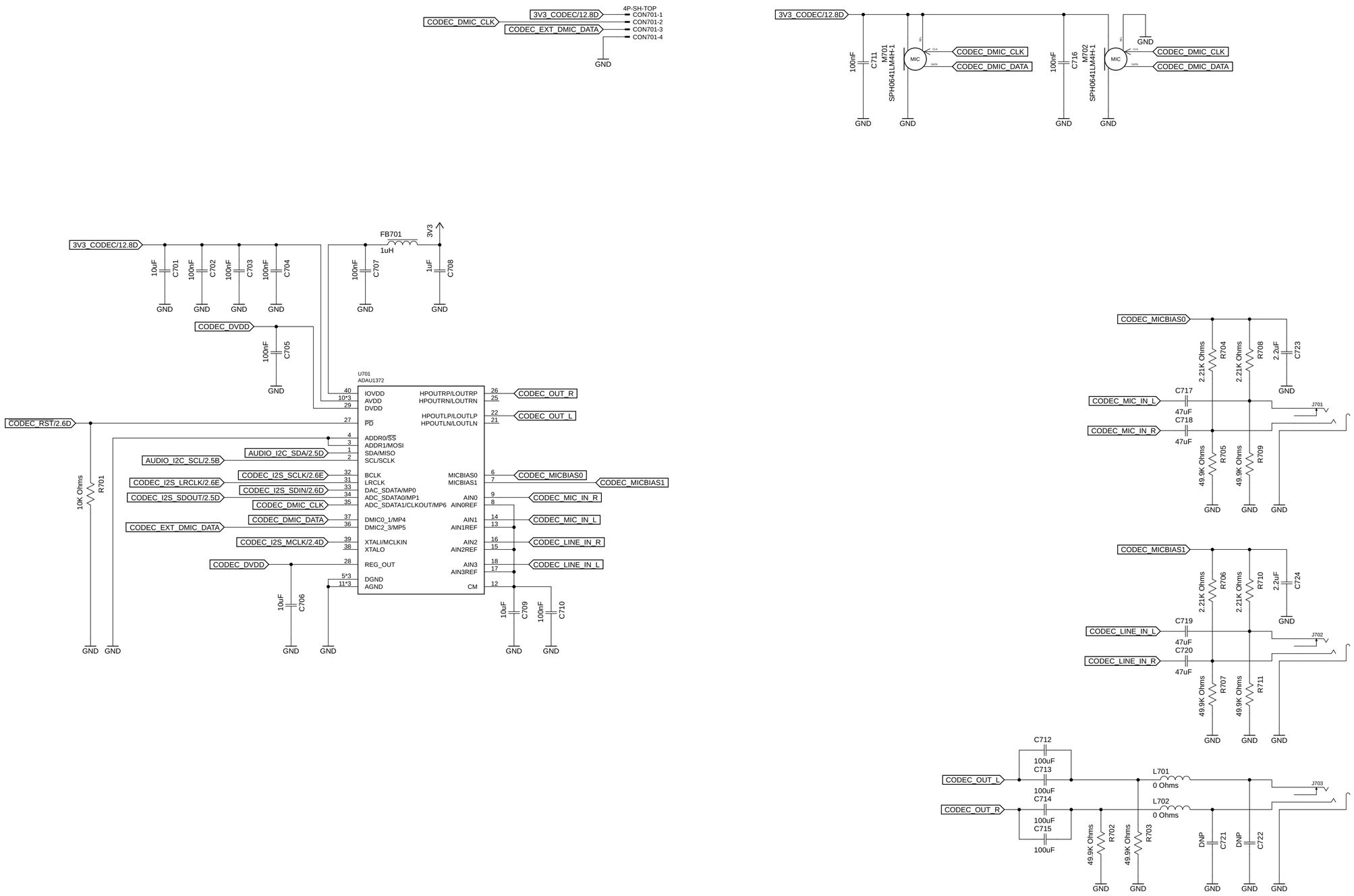

icyradio-main	
Joao Silva	
Sheet: 7/13	Audio CODEC
Date: 11/10/23 18:50	Rev: 2

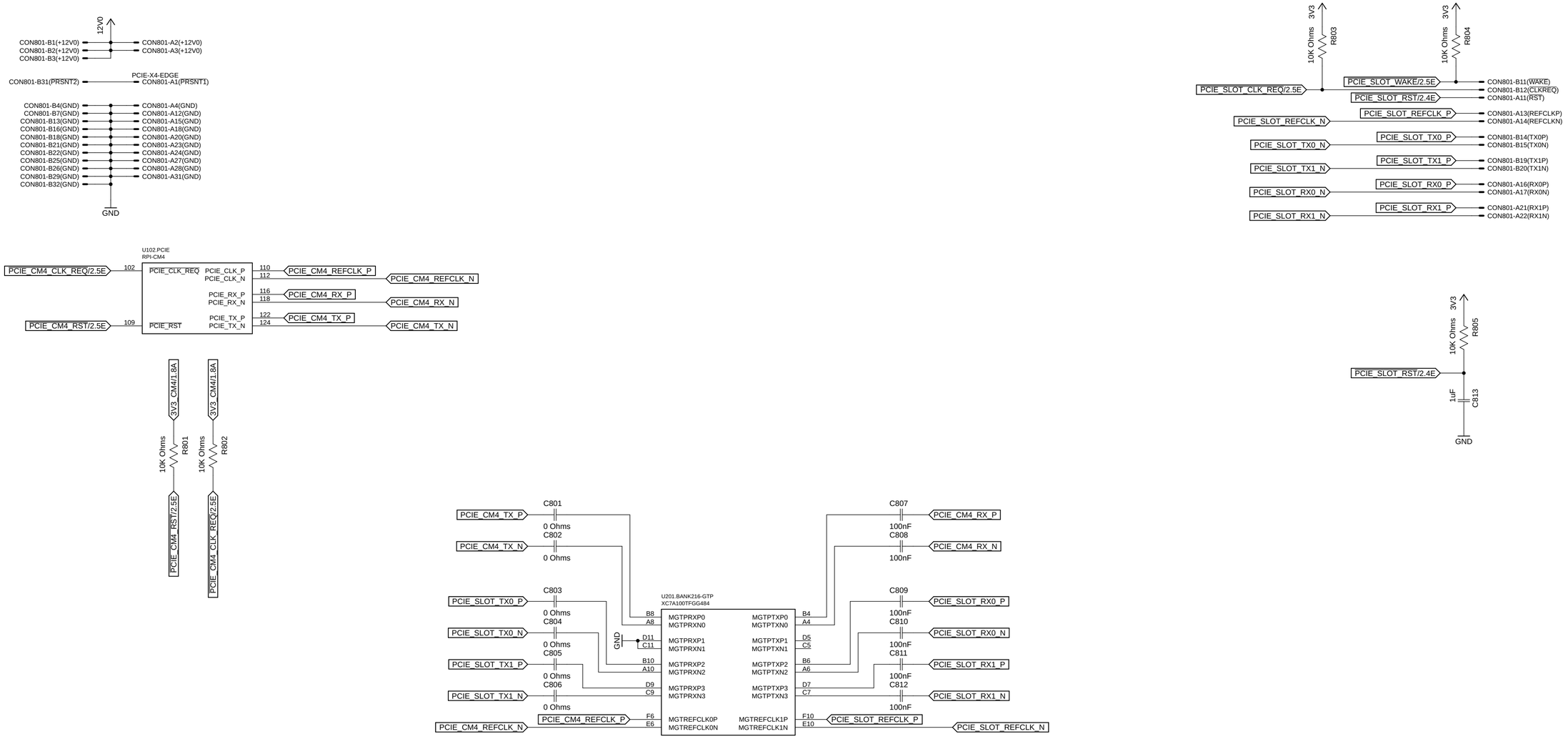

icyradio-main	
Joao Silva	
Sheet: 8/13	PCI Express
Date: 11/10/23 18:50	Rev: 2

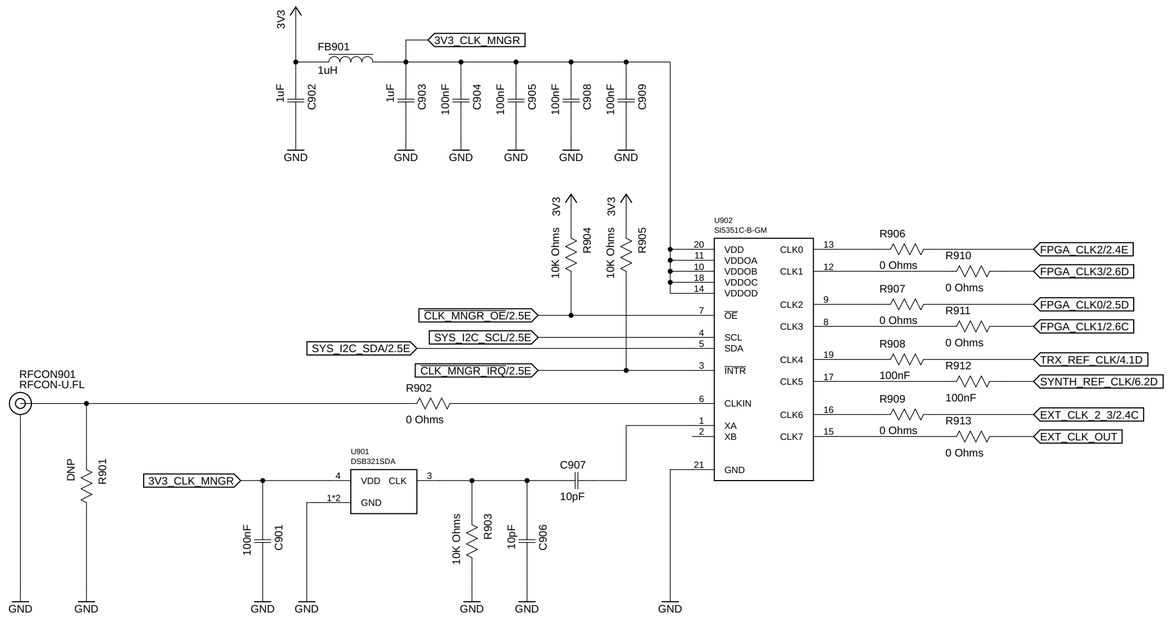

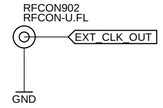

icyradio-main	
Joao Silva	
Sheet: 9/13	Clock generator
Date: 11/10/23 18:50	Rev: 2

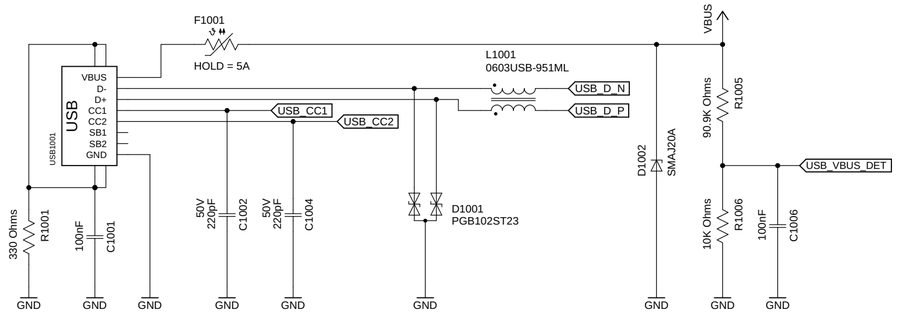

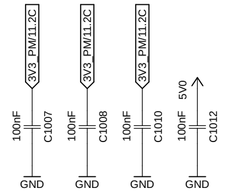

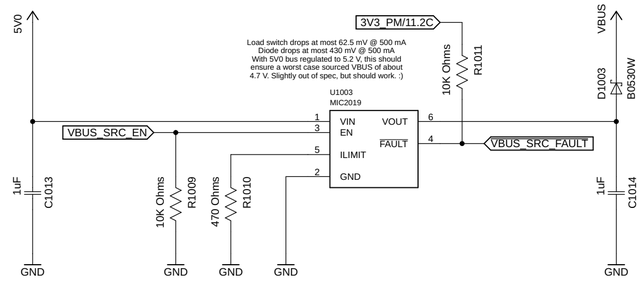

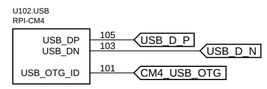

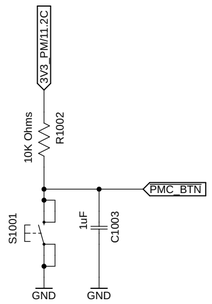

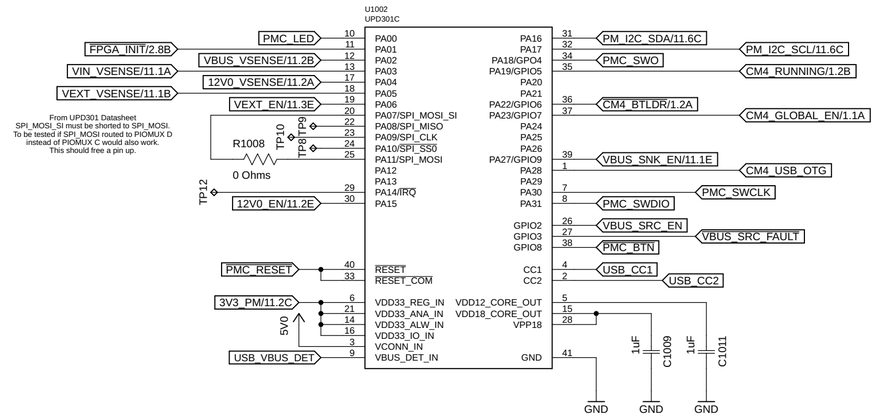

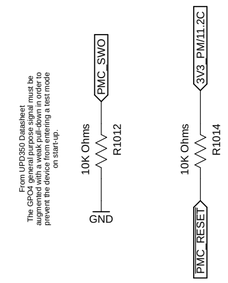

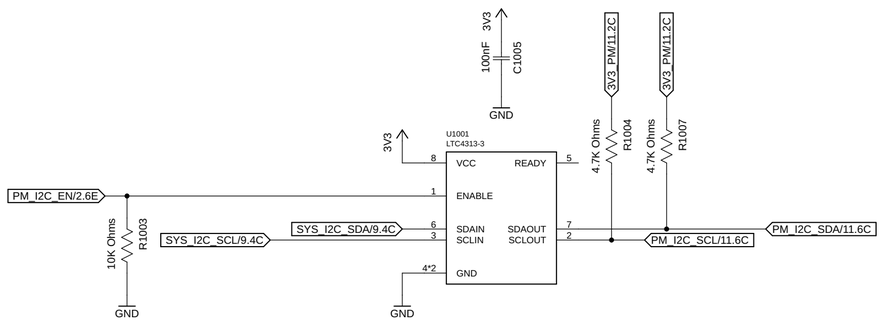

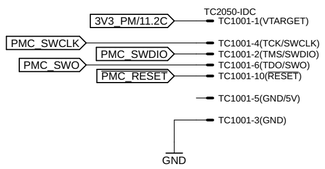

icyradio-main	
Joao Silva	
Sheet: 10/13	Power Management
Date: 11/10/23 18:50	Rev: 2

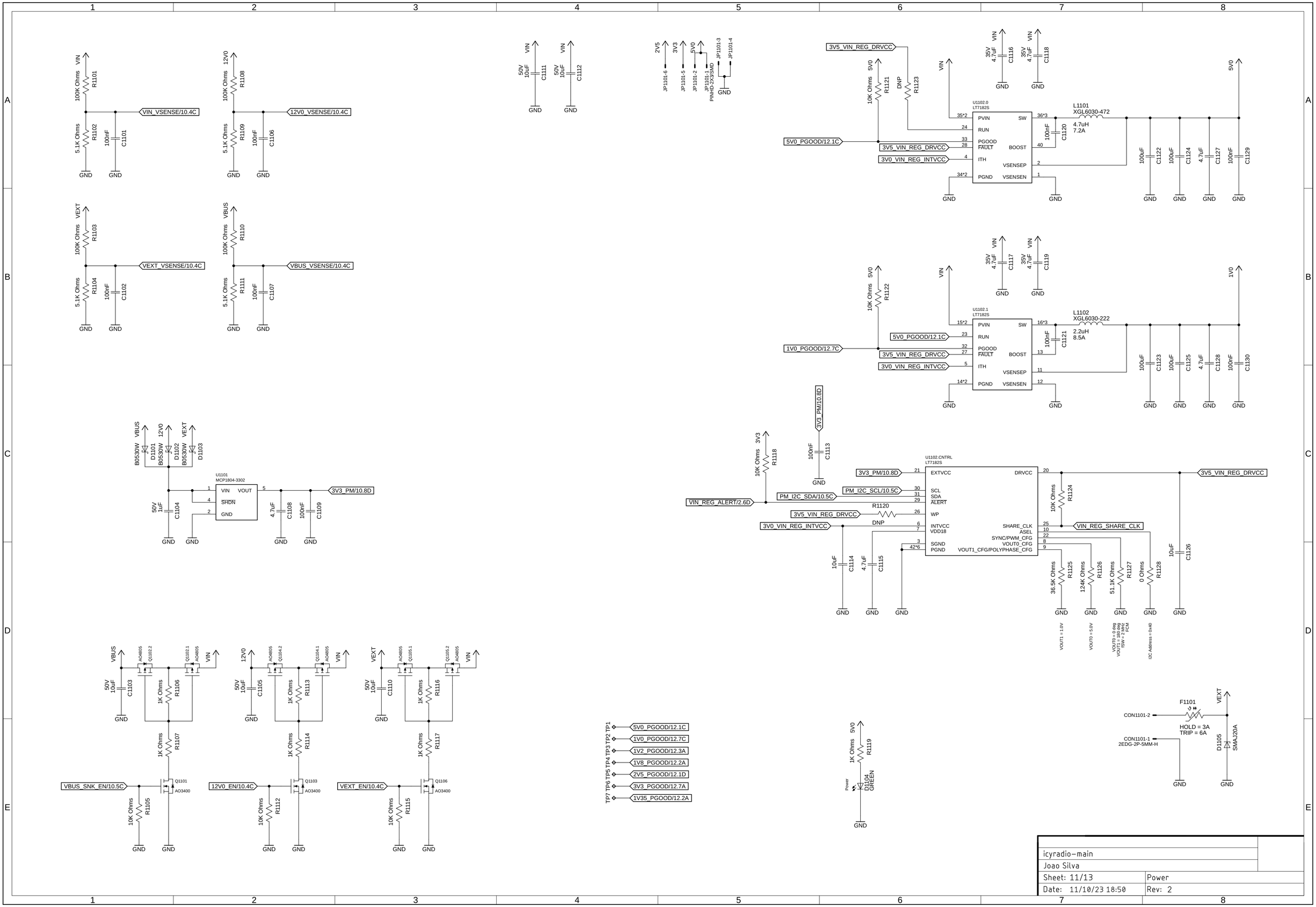
VIN_VSENSE/10.4C
12V0_VSENSE/10.4C
VEXT_VSENSE/10.4C
VBUS_VSENSE/10.4C
U1102.0
LT7182S
L1101
XGL6030-472
4.7uH
7.2A
U1102.1
LT7182S
L1102
XGL6030-222
2.2uH
8.5A
U1101
MCP1804-3302
U1102.CNTRL
LT7182S
3V3_PM/10.8D
VIN_REG_ALERT/2.6D
PM_I2C_SCL/10.5C
PM_I2C_SDA/10.5C
VIN_REG_SHARE_CLK
3V5_VIN_REG_DRVCC
3V0_VIN_REG_INTVCC
5V0_PGOOD/12.1C
1V0_PGOOD/12.7C
VBUS_SNK_EN/10.5C
12V0_EN/10.4C
VEXT_EN/10.4C
1V2_PGOOD/12.3A
1V8_PGOOD/12.2A
2V5_PGOOD/12.1D
1V35_PGOOD/12.2A
F1101
HOLD = 3A
TRIP = 6A
CON1101-2
CON1101-1
2EDG-2P-5MM-H
icyradio-main
Joao Silva
Sheet: 11/13
Power
Date: 11/10/23 18:50
Rev: 2

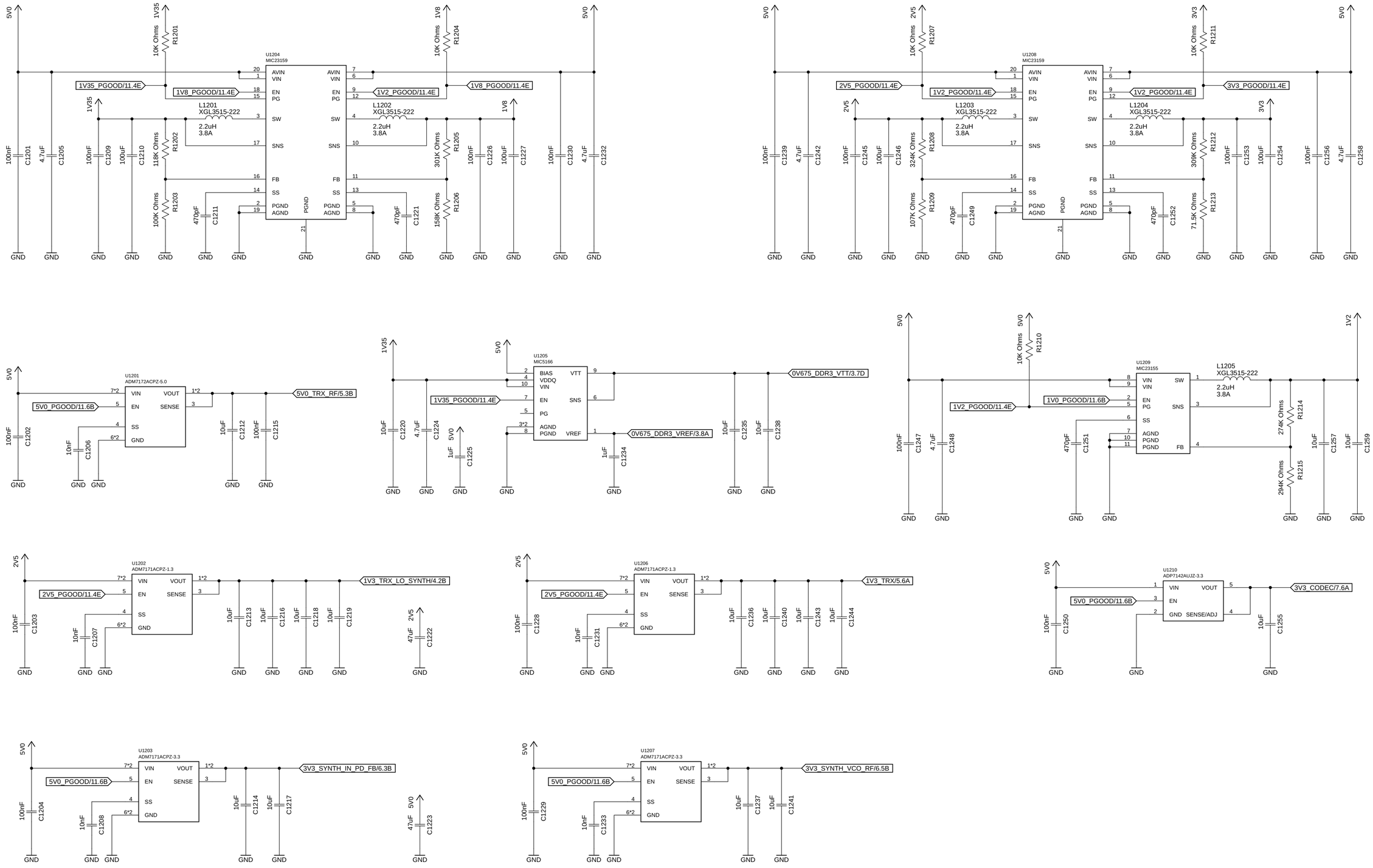

icyradio-main	
Joao Silva	
Sheet: 12/13	Power
Date: 11/10/23 18:50	Rev: 2

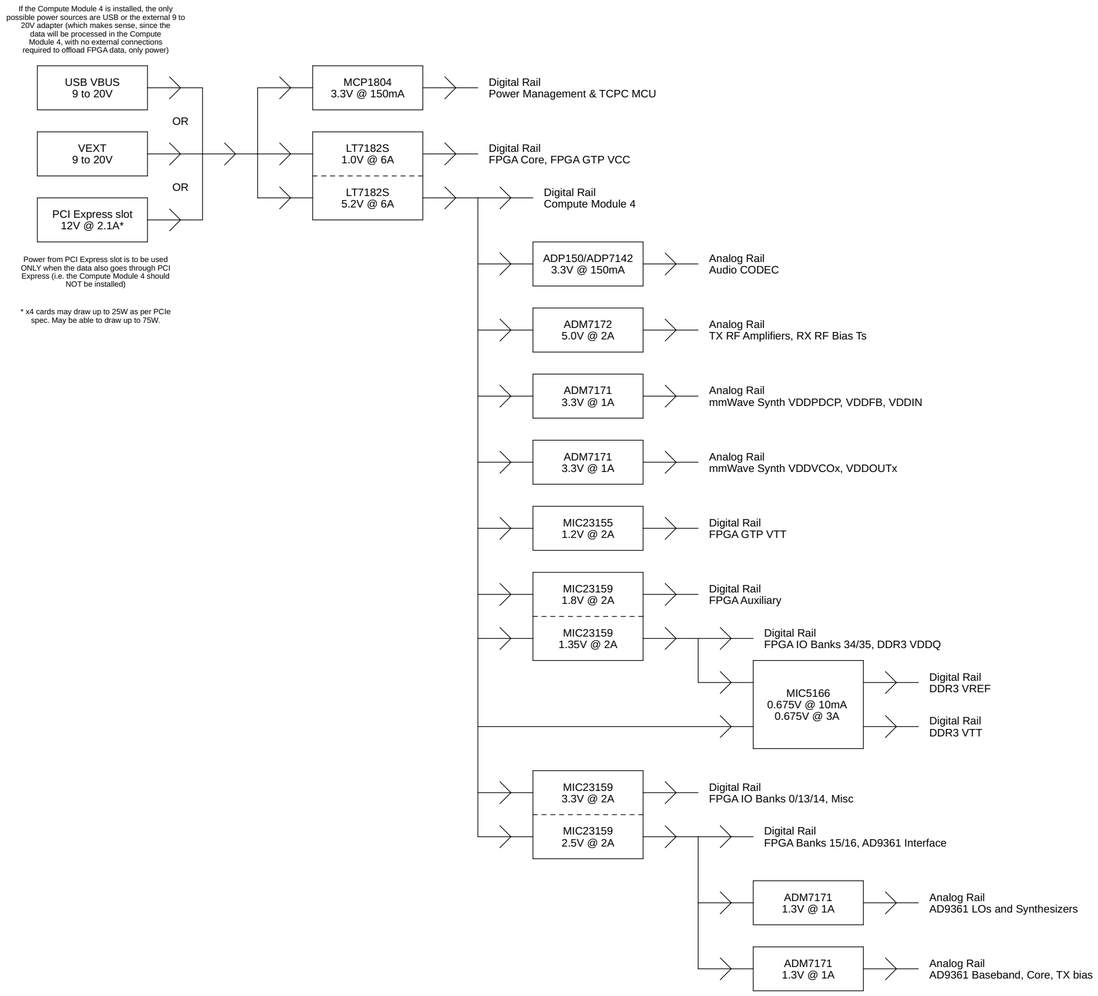

Power Sequence

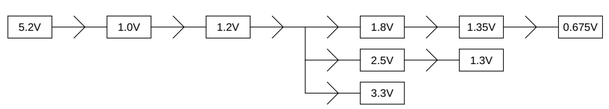

icyradio-main	
Joao Silva	
Sheet: 13/13	Power tree
Date: 11/10/23 18:50	Rev: 2