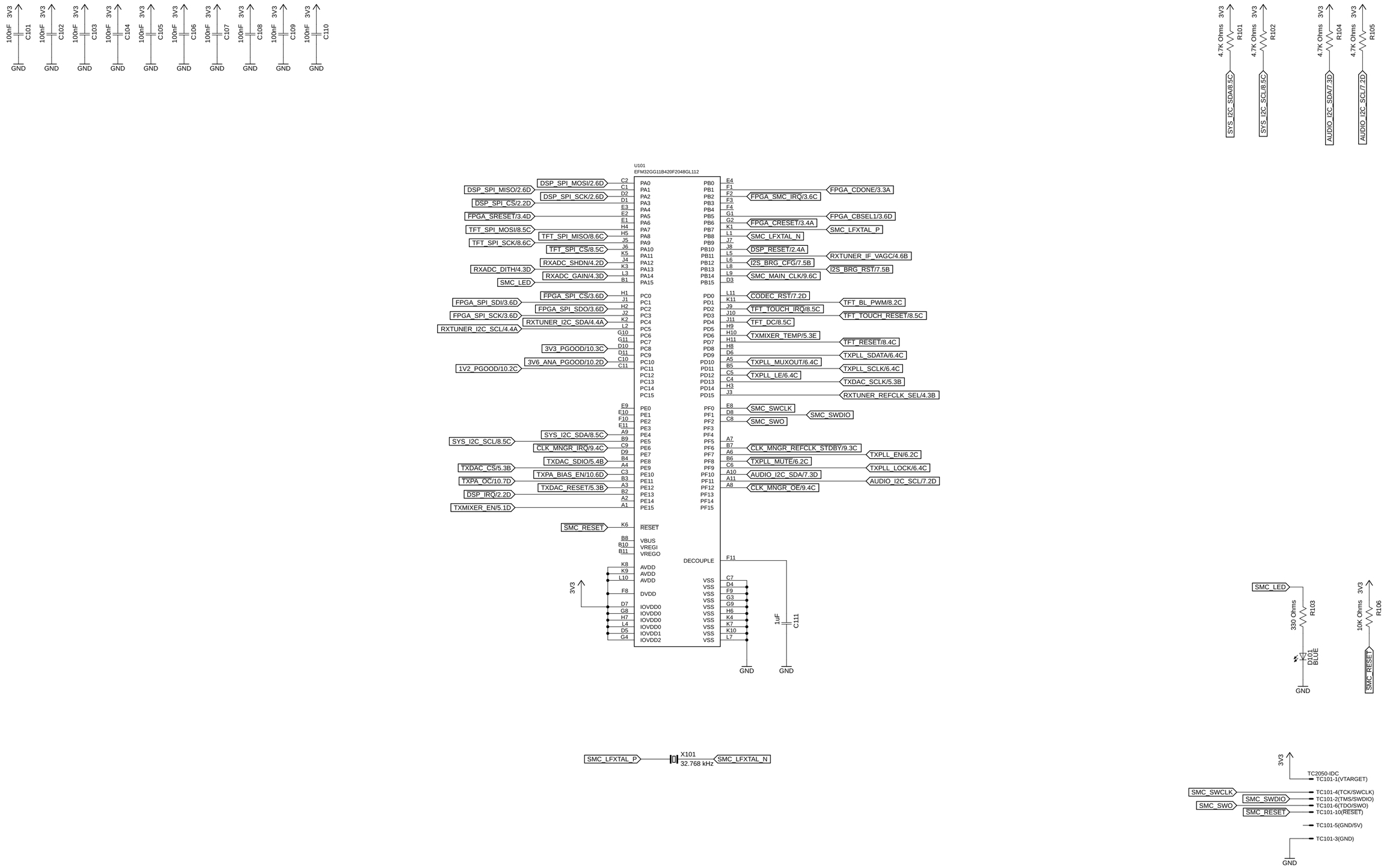

icyradio-main

Joao Silva

Sheet: 1/10 | SMC MCU

Date: 01/09/20 12:53 | Rev: 1

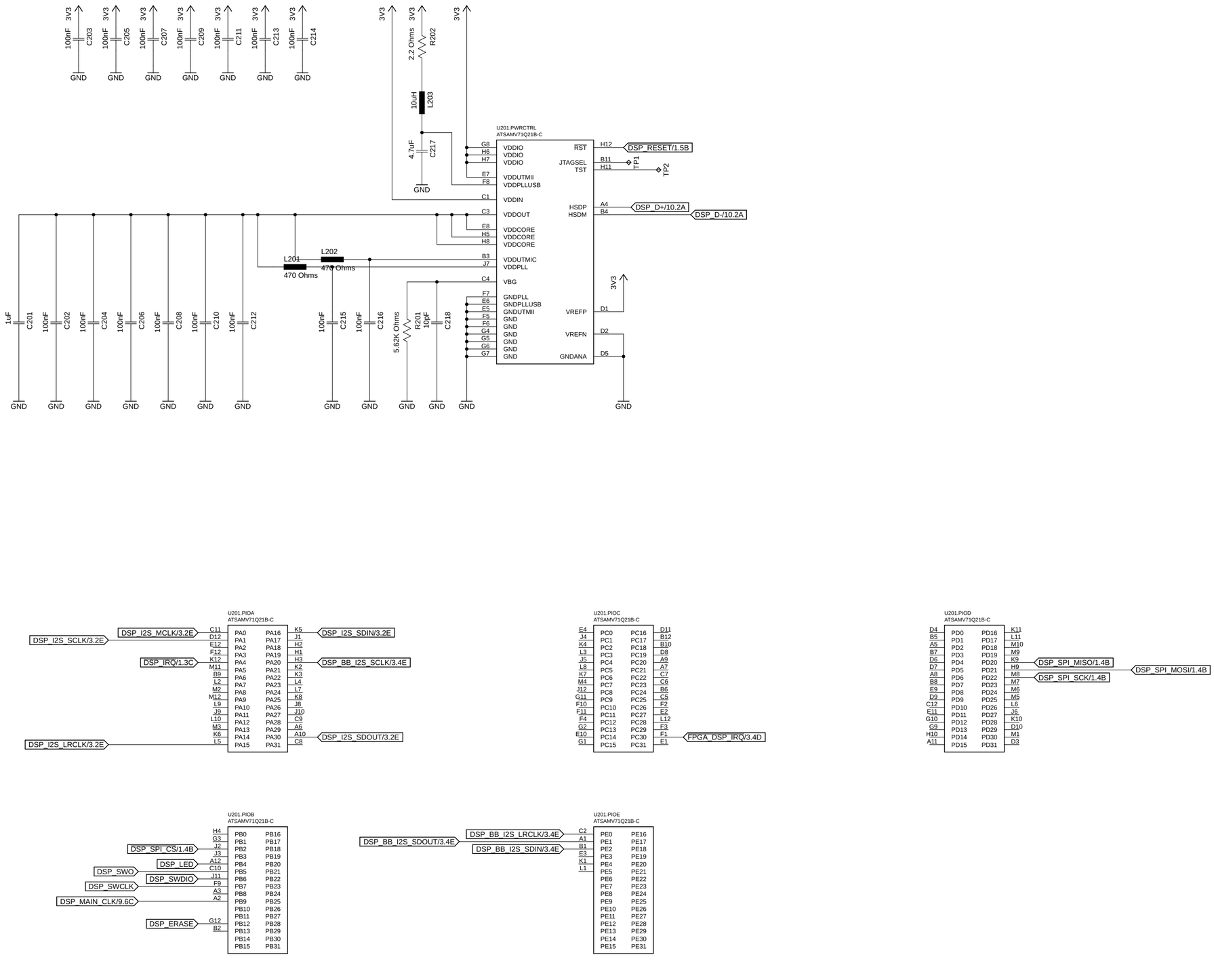

icyradio-main

Joao Silva

Sheet: 2/10 | DSP MCU

Date: 01/09/20 12:53 | Rev: 1

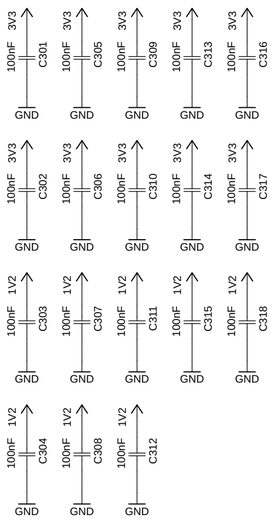

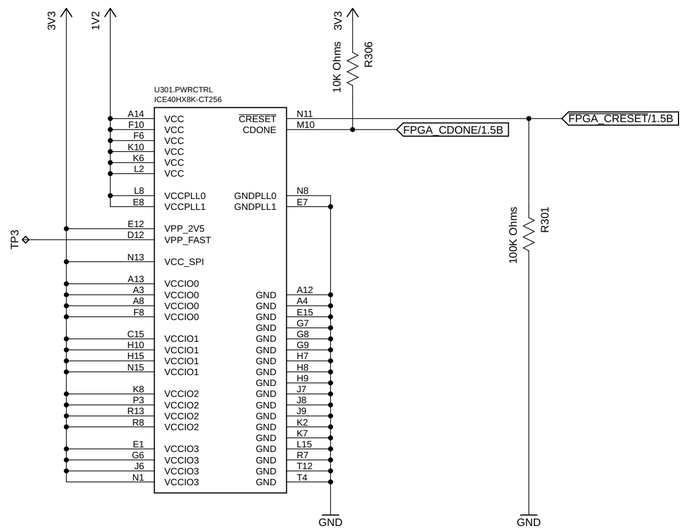

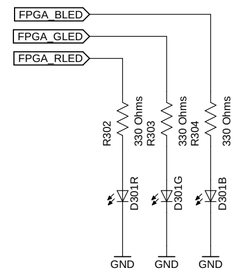

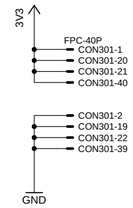

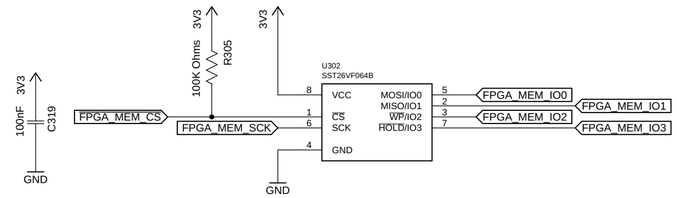

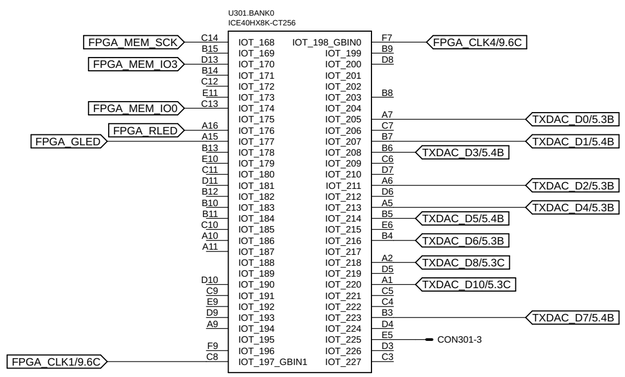

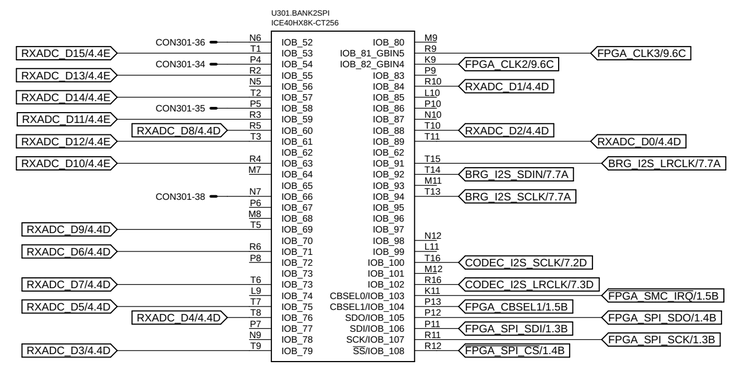

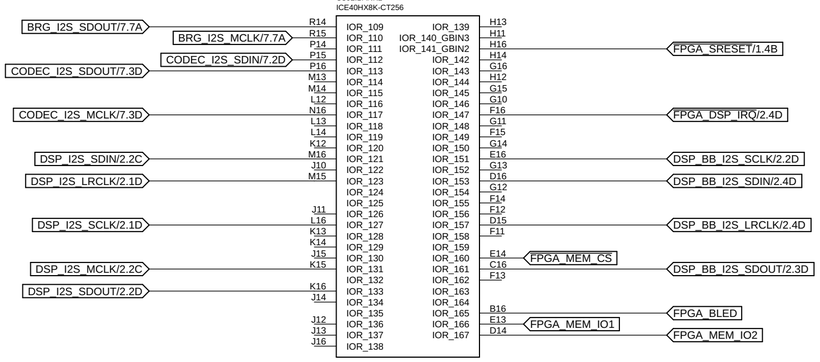

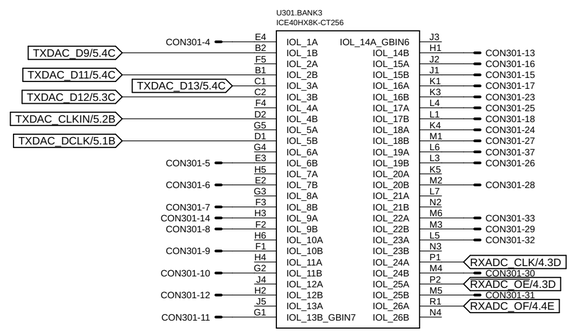

icyradio-main	
Joao Silva	
Sheet: 3/10	FPGA
Date: 01/09/20 12:53	Rev: 1

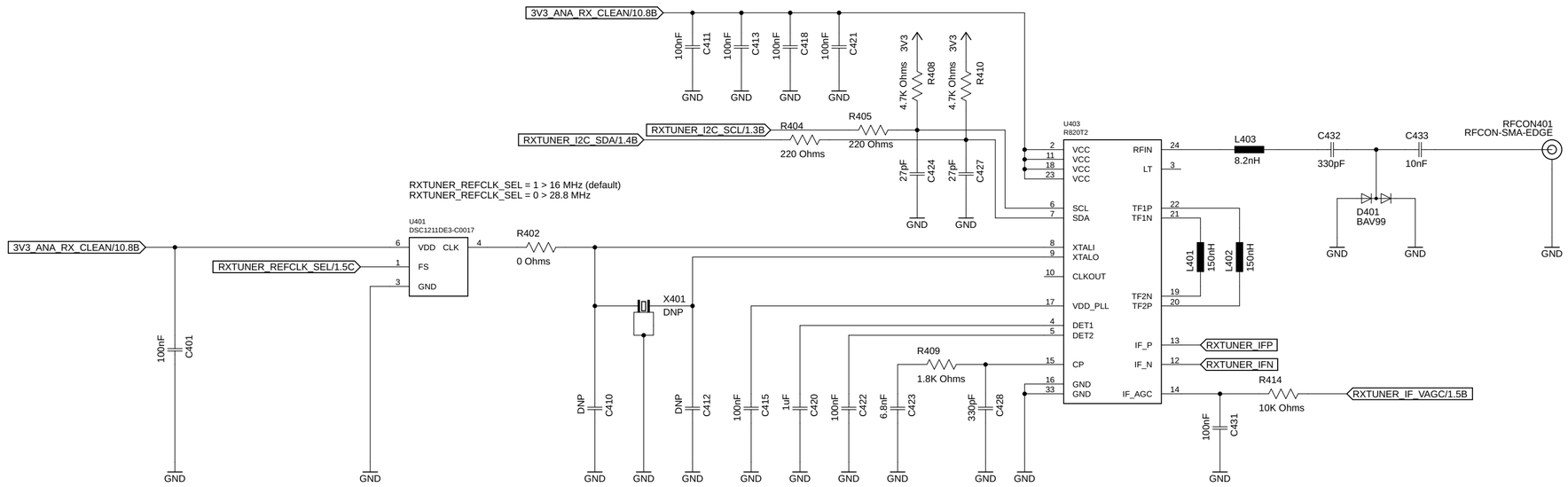

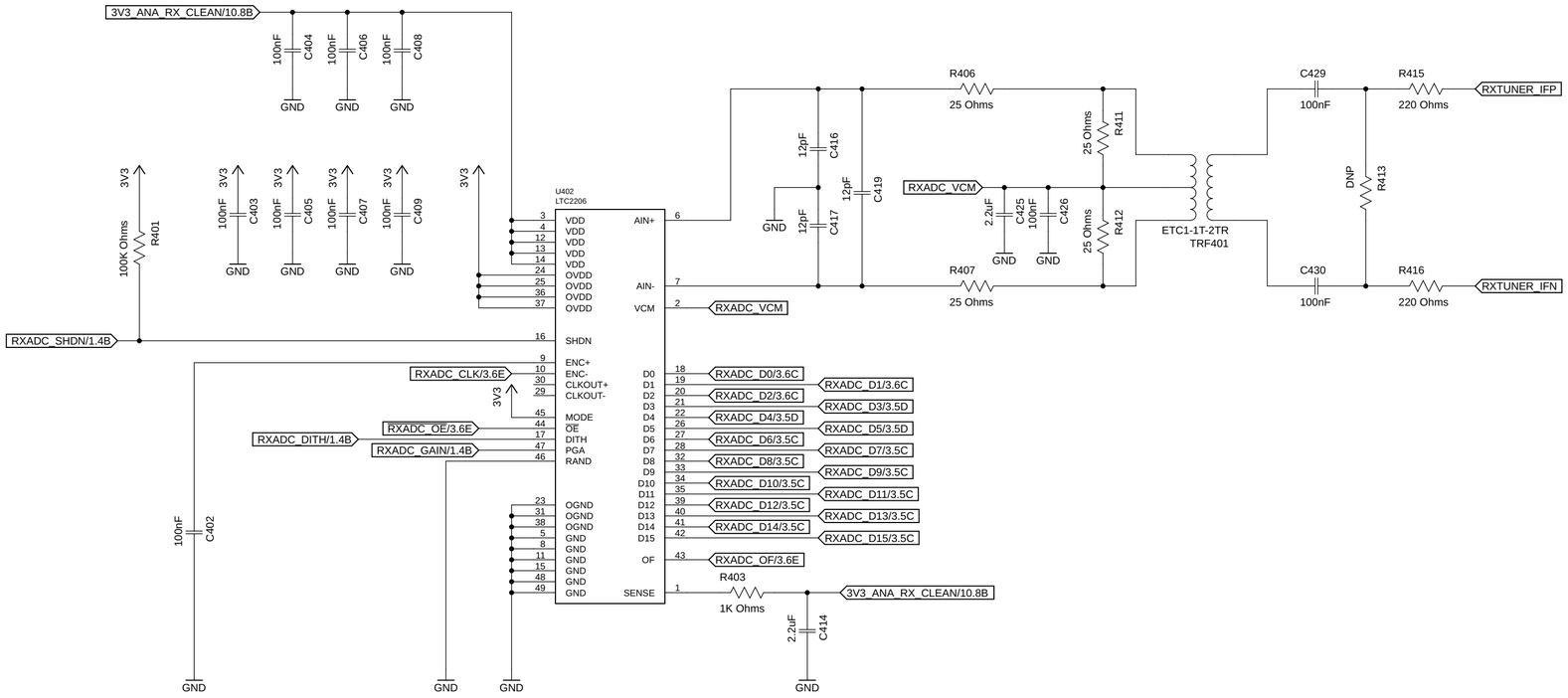

icyradio-main	
Joao Silva	
Sheet: 4/10	RX Tumer + RX IF ADC
Date: 01/09/20 12:53	Rev: 1

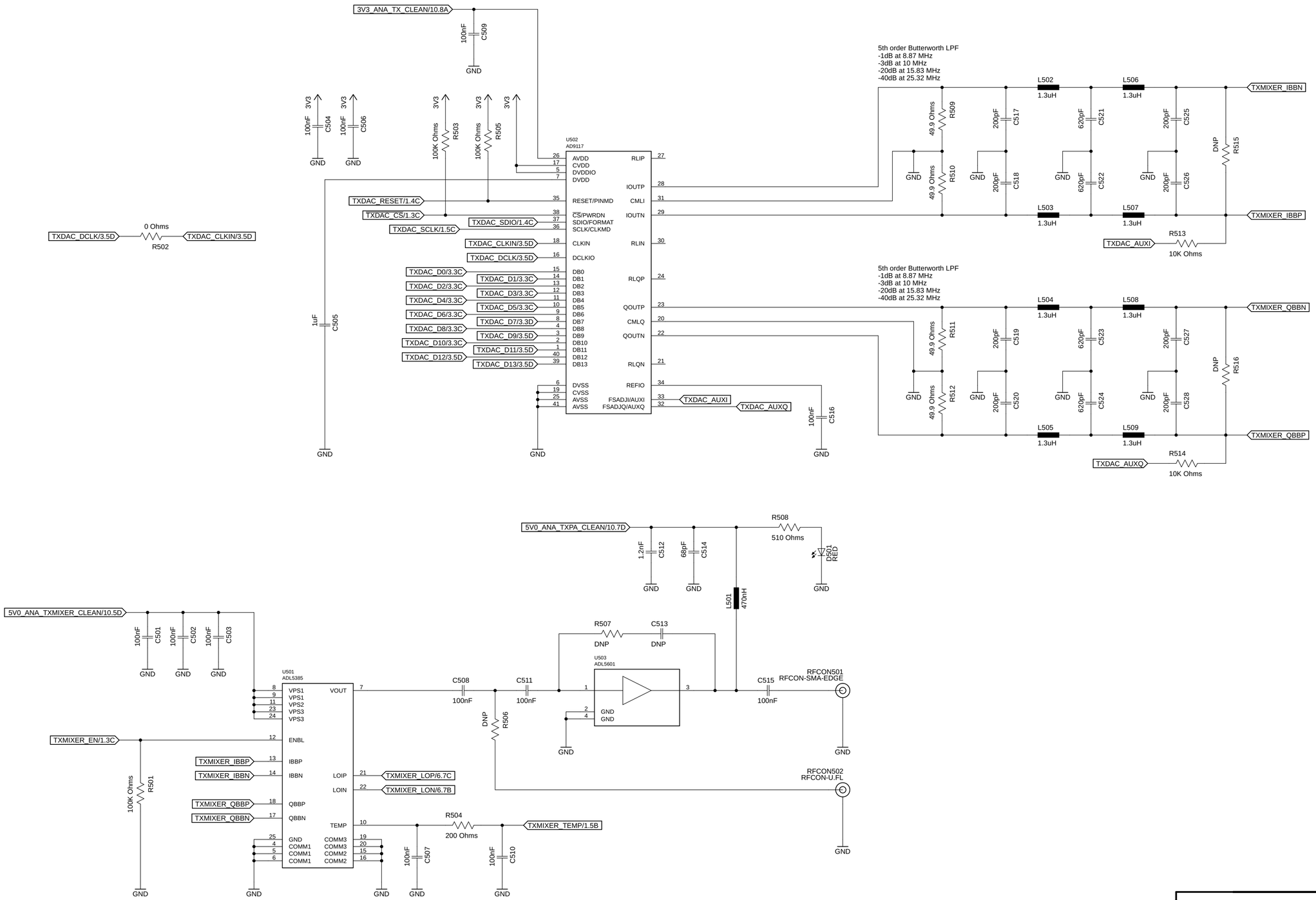

icyradio-main	
Joao Silva	
Sheet: 5/10	TX BB DAC + Upconverting Mixer
Date: 01/09/20 12:53	Rev: 1

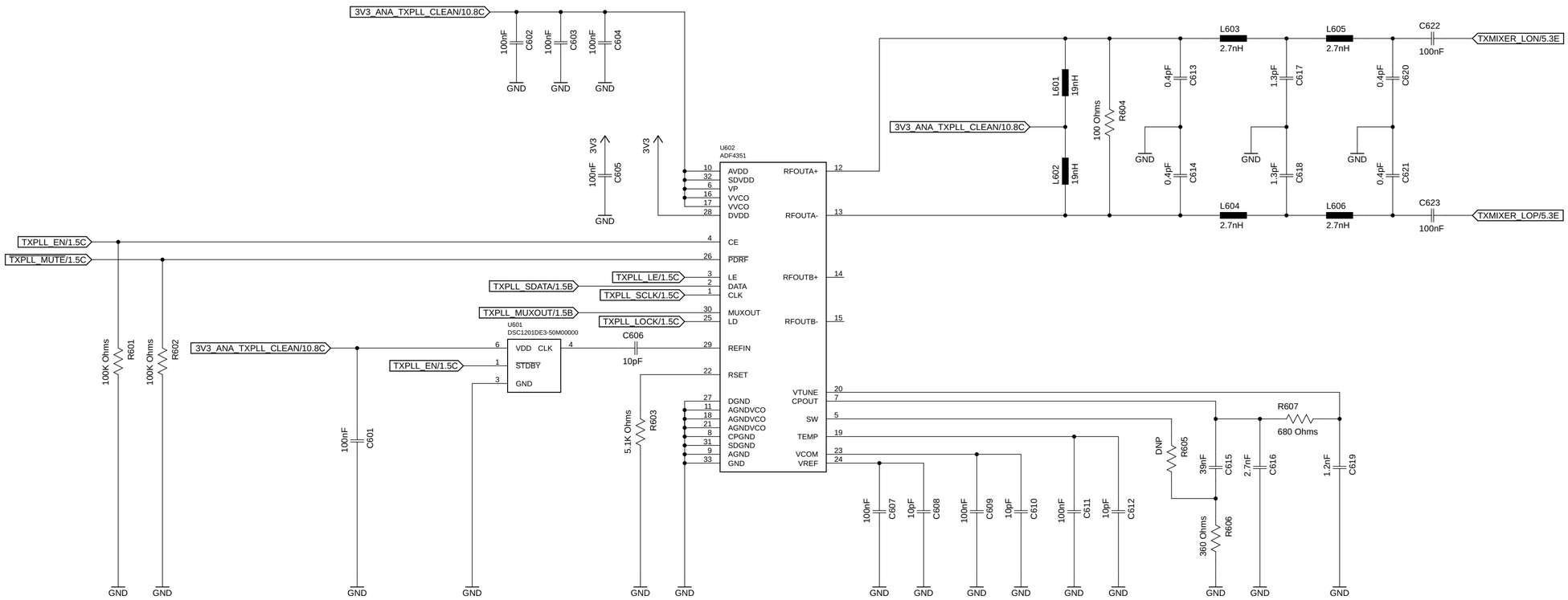

icyradio-main	
Joao Silva	
Sheet: 6/10	TX LO Synthesizer
Date: 01/09/20 12:53	Rev: 1

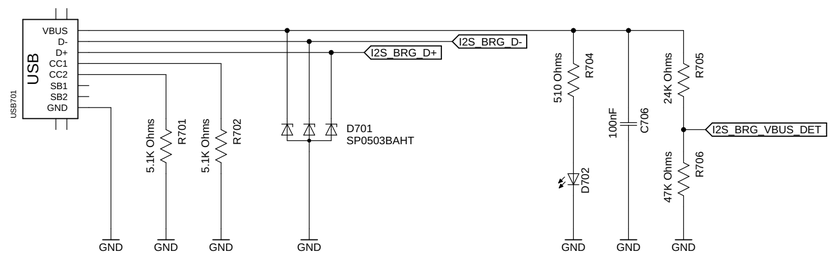

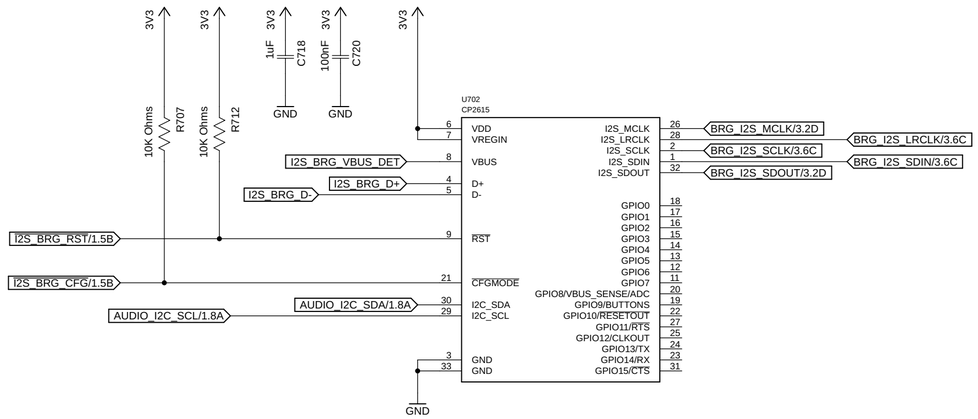

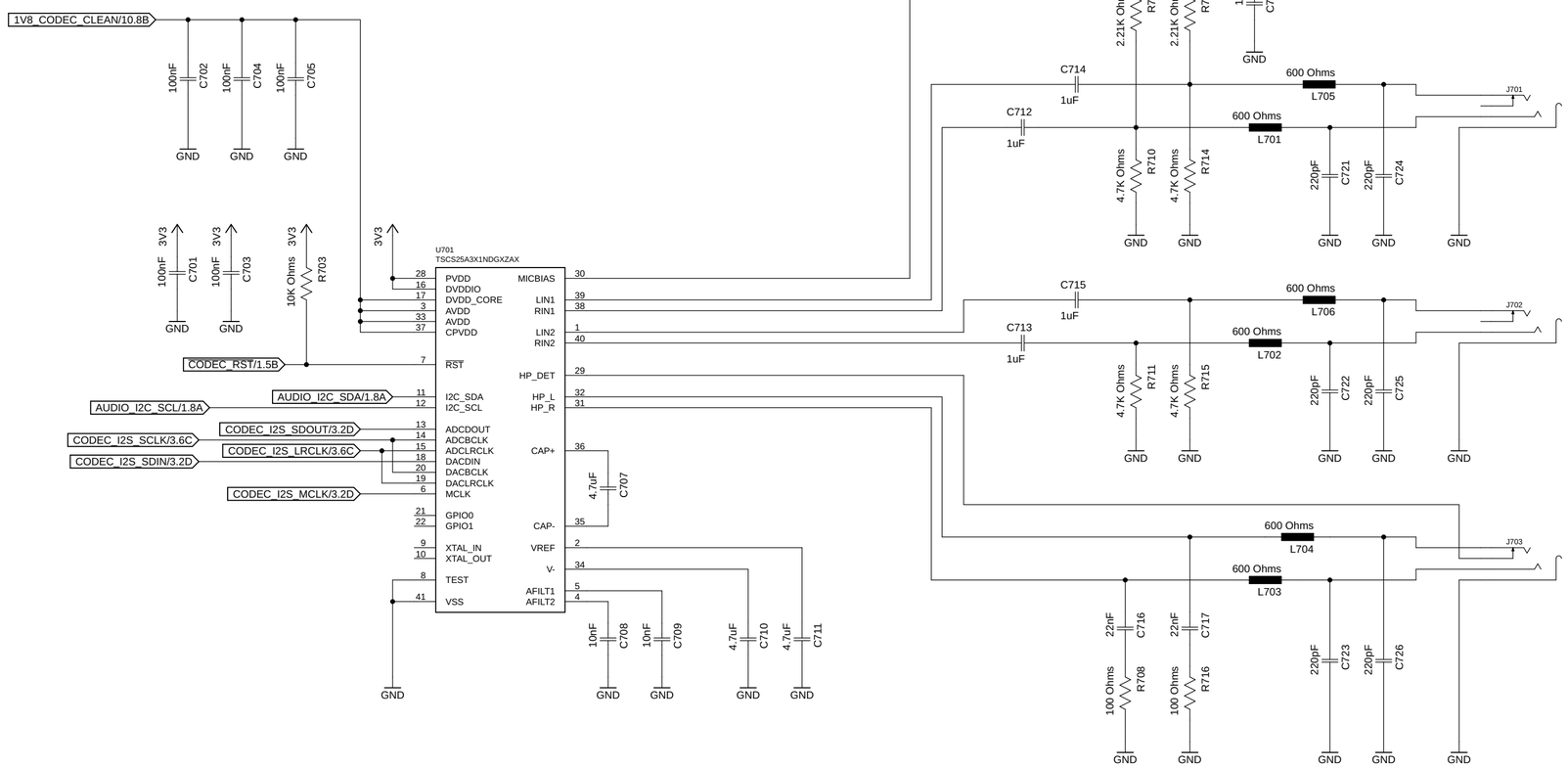

icyradio-main	
Joao Silva	
Sheet: 7/10	USB I2S bridge + CODEC
Date: 01/09/20 12:53	Rev: 1

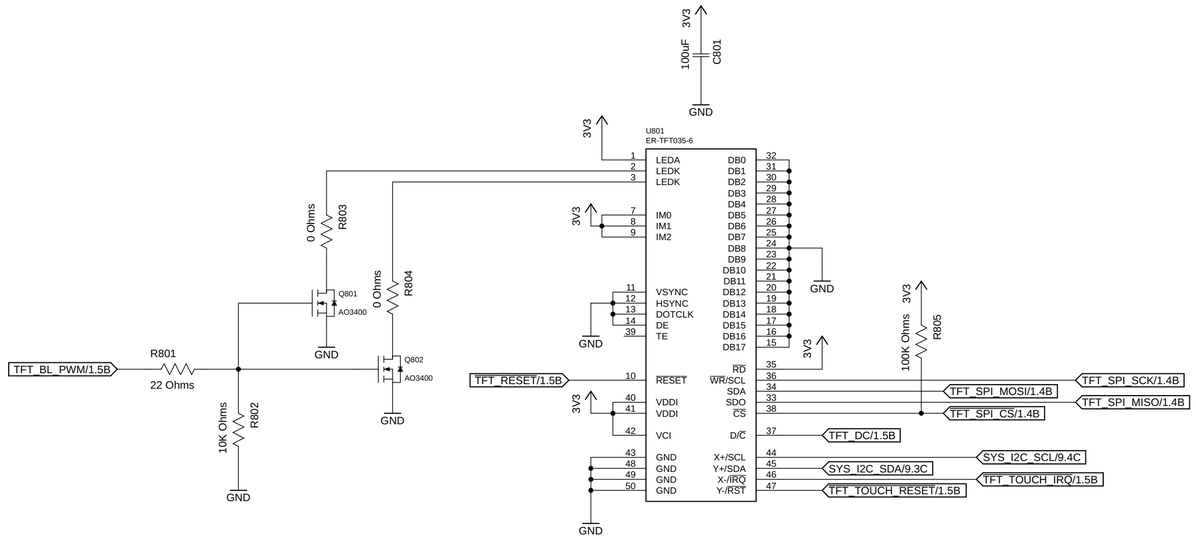

icyradio-main	
Joao Silva	
Sheet: 8/10	TFT Display
Date: 01/09/20 12:53	Rev: 1

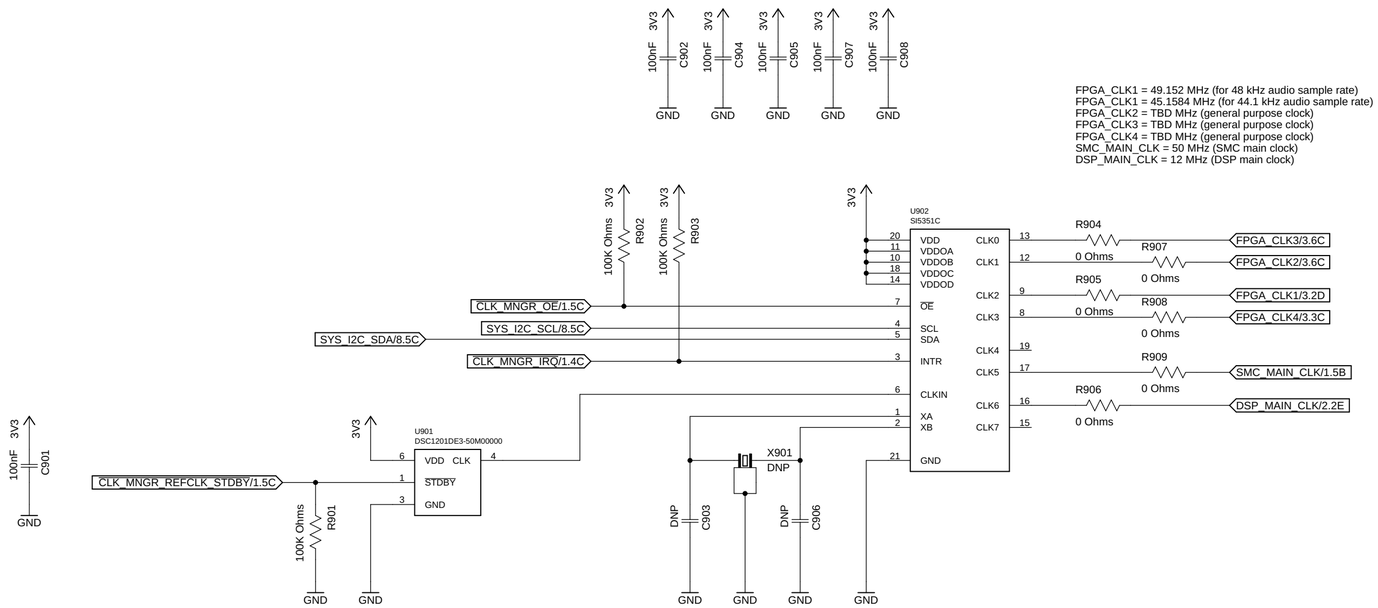

icyradio-main	
Joao Silva	
Sheet: 9/10	Clock generator
Date: 01/09/20 12:53	Rev: 1

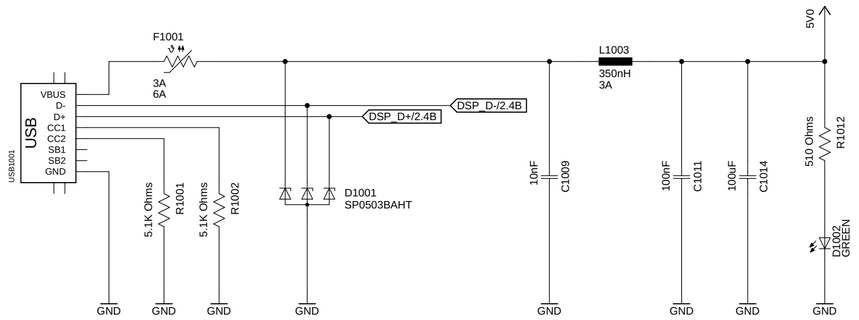

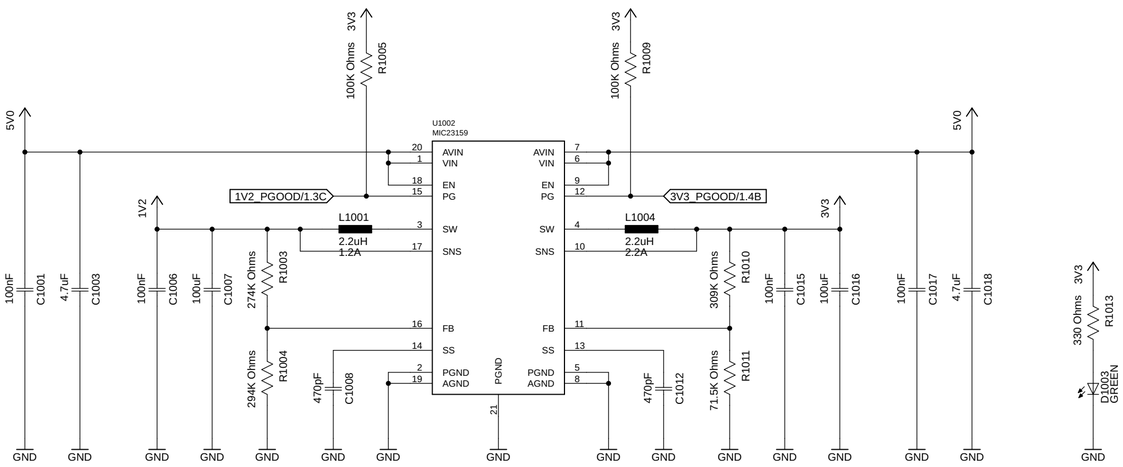

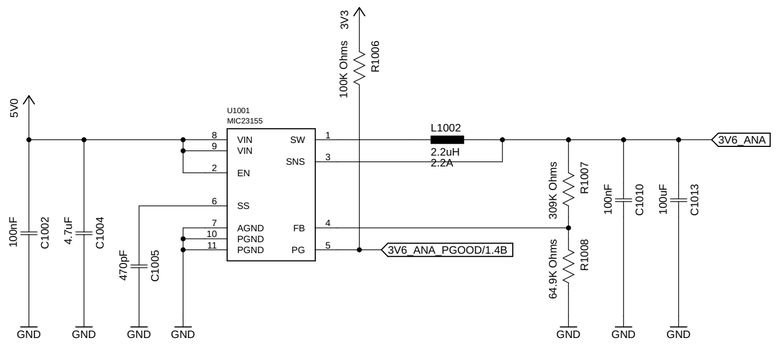

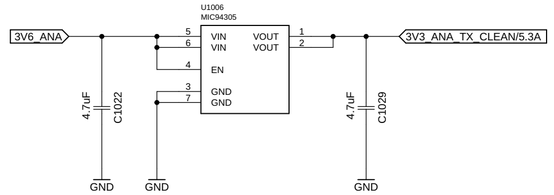

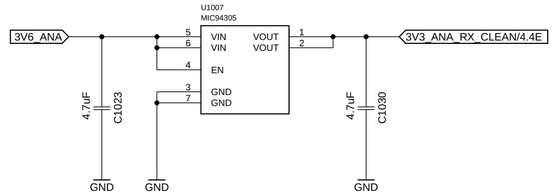

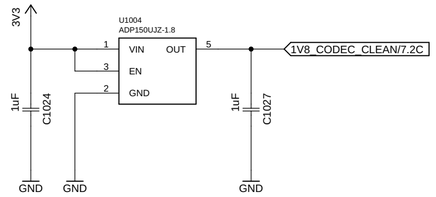

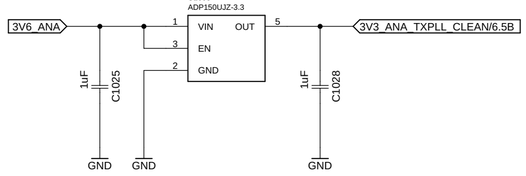

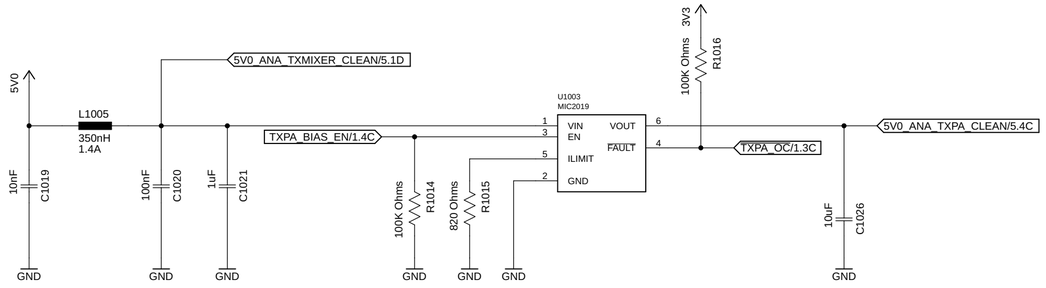

icyradio-main	
Joao Silva	
Sheet: 10/10	Power
Date: 01/09/20 12:53	Rev: 1