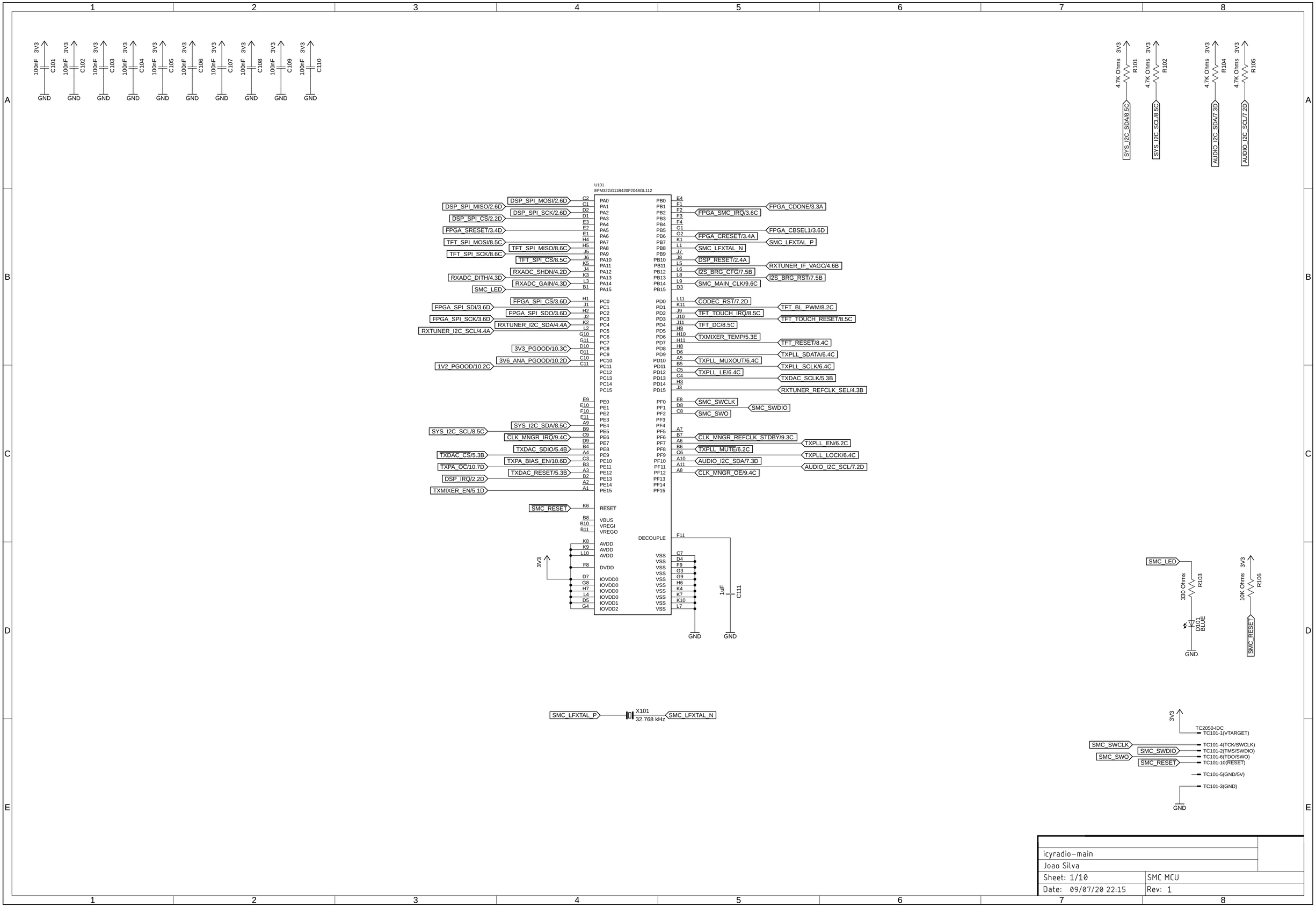

icyradio-main	
Joao Silva	
Sheet: 1/10	SMC MCU
Date: 09/07/20 22:15	Rev: 1

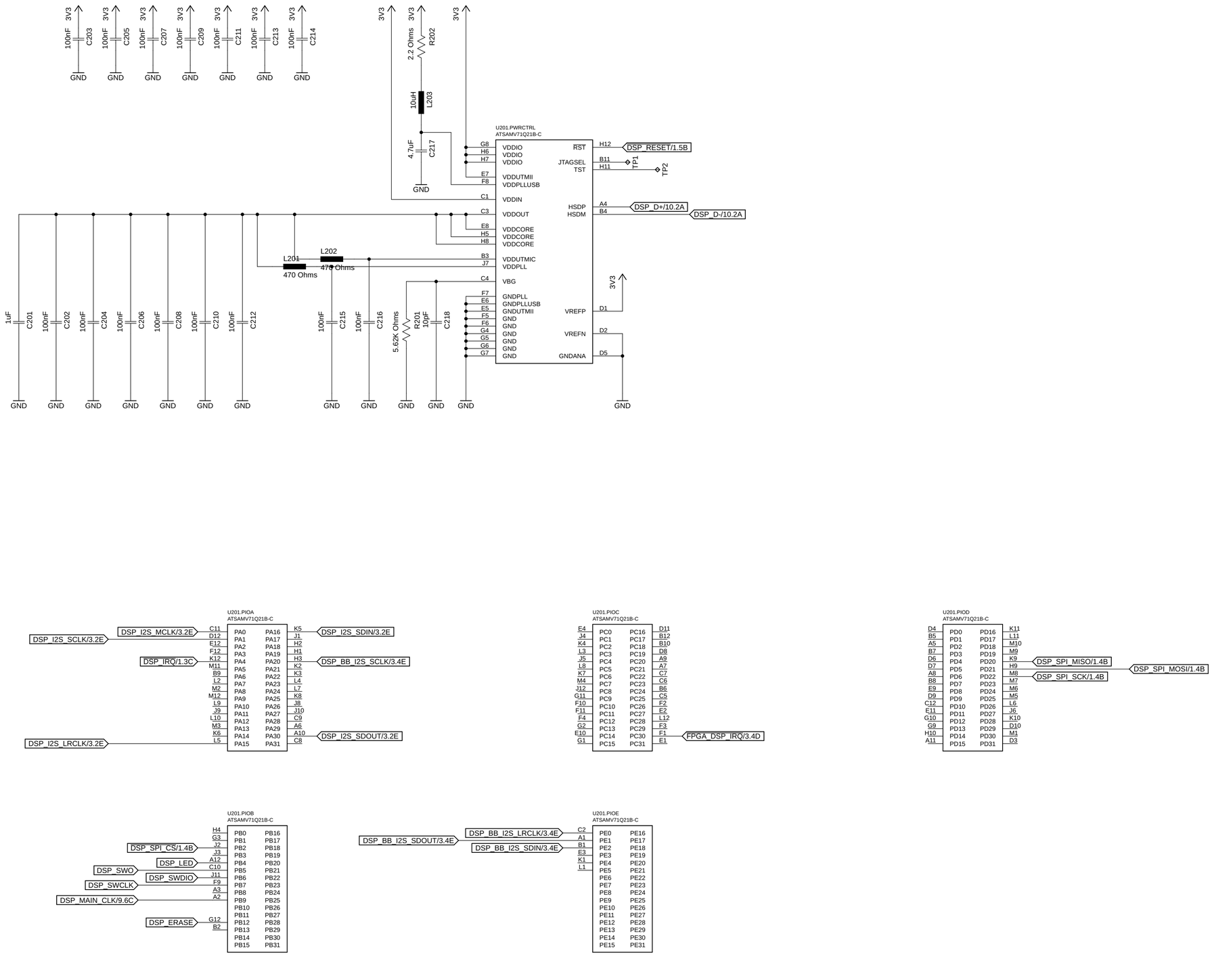

icyradio-main	
Joao Silva	
Sheet: 2/10	DSP MCU
Date: 09/07/20 22:15	Rev: 1

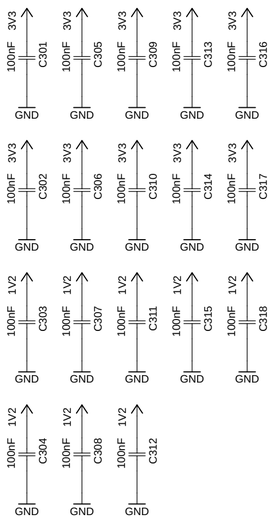

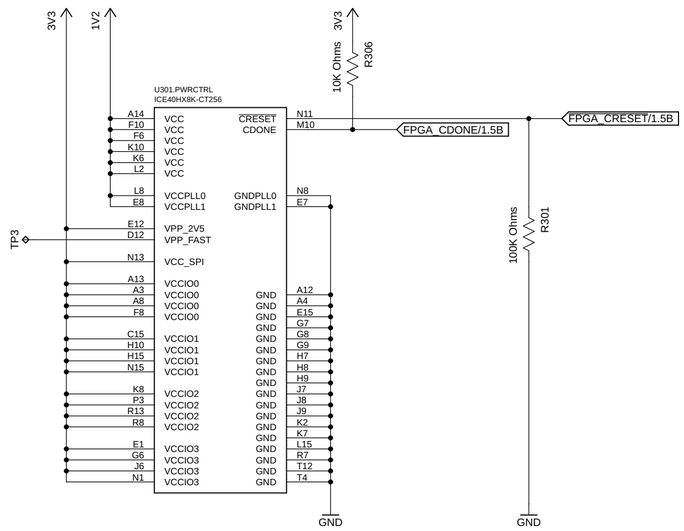

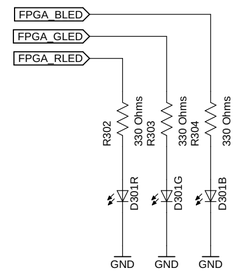

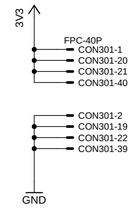

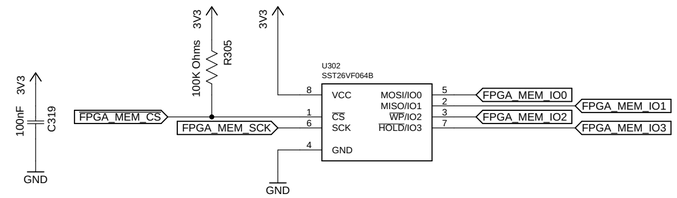

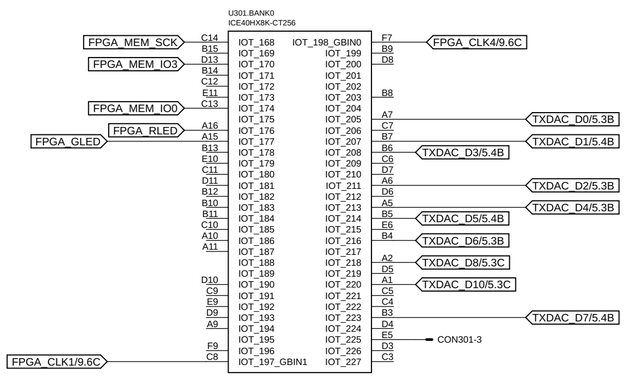

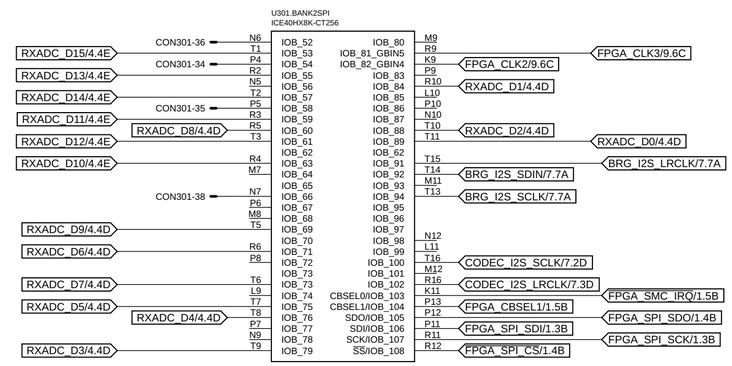

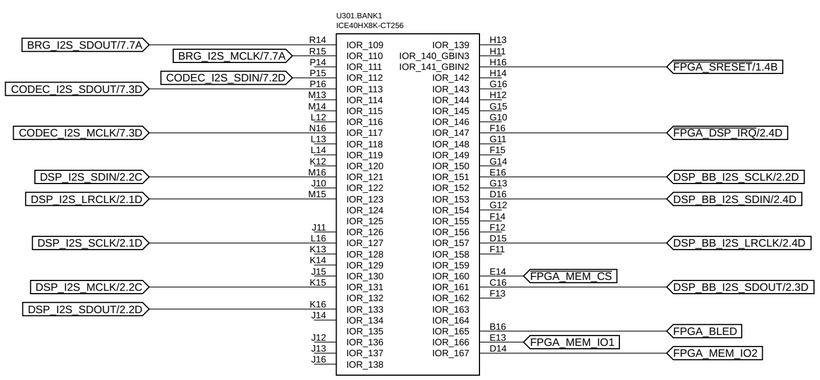

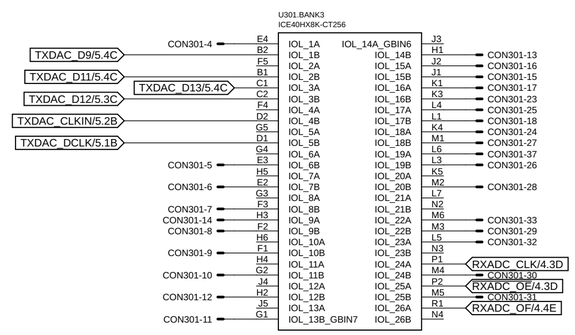

icyradio-main	
Joao Silva	
Sheet: 3/10	FPGA
Date: 09/07/20 22:15	Rev: 1

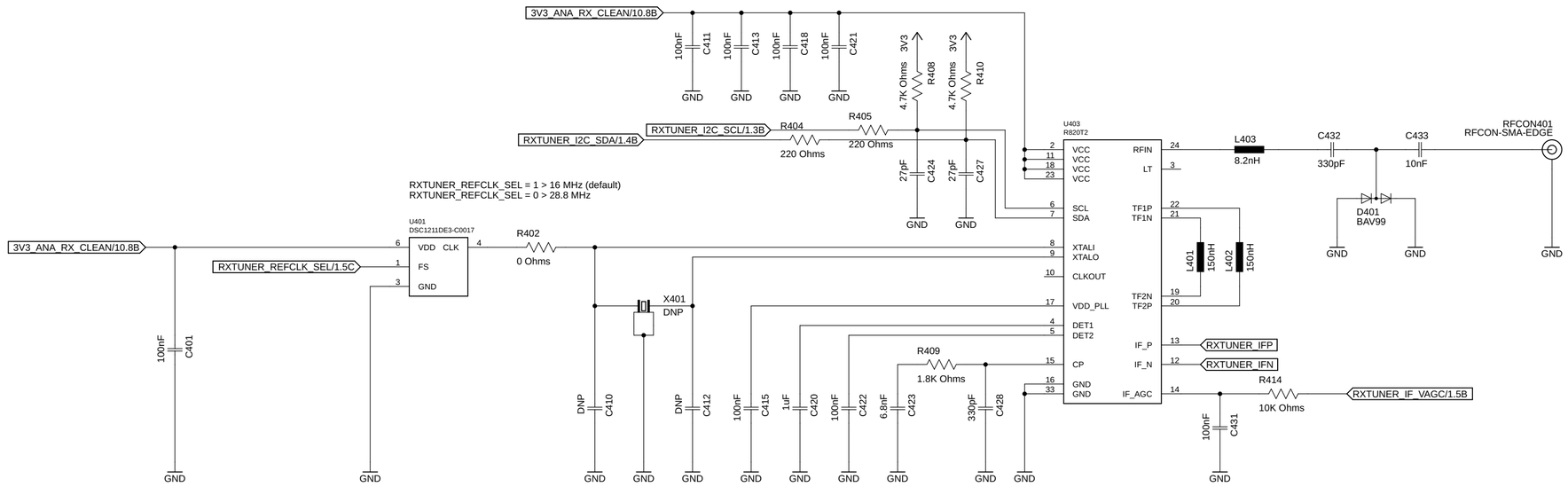

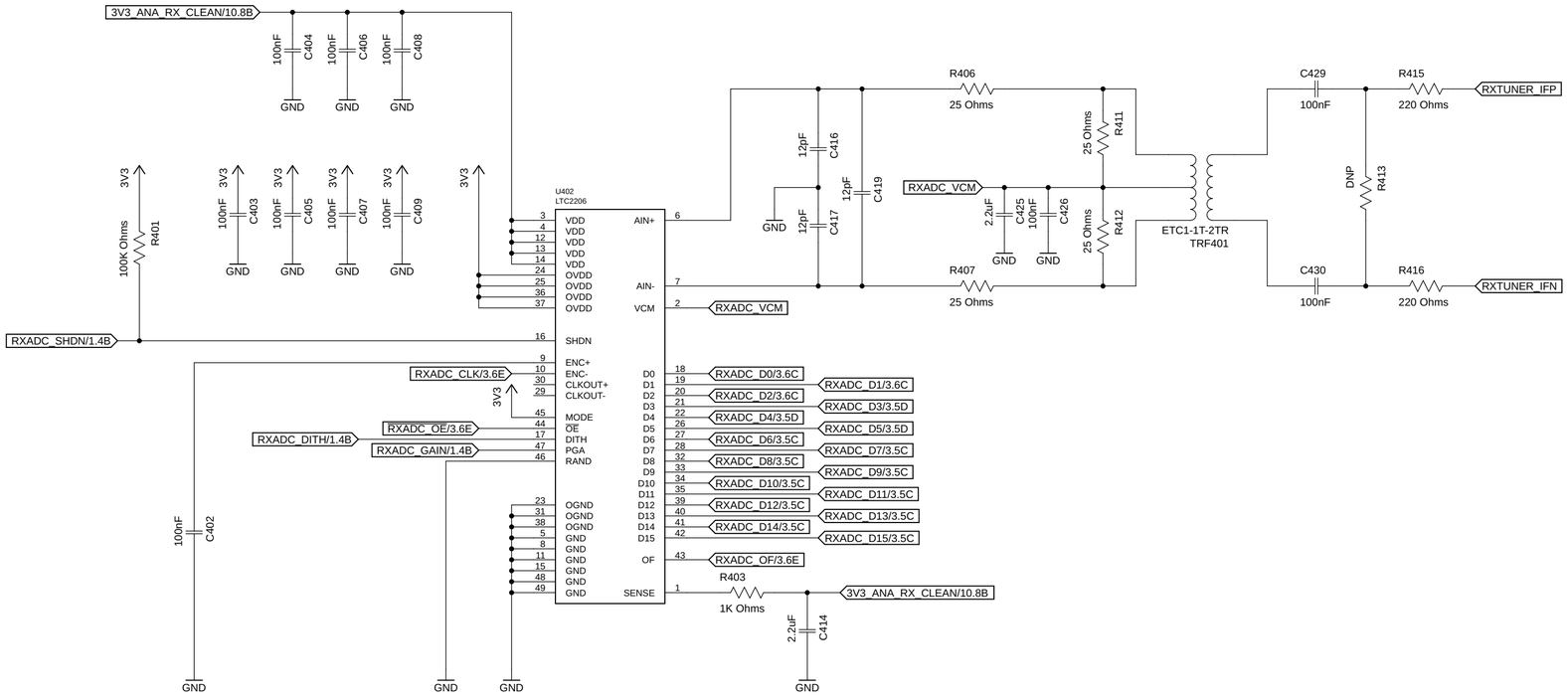

icyradio-main	
Joao Silva	
Sheet: 4/10	RX Tumer + RX IF ADC
Date: 09/07/20 22:15	Rev: 1

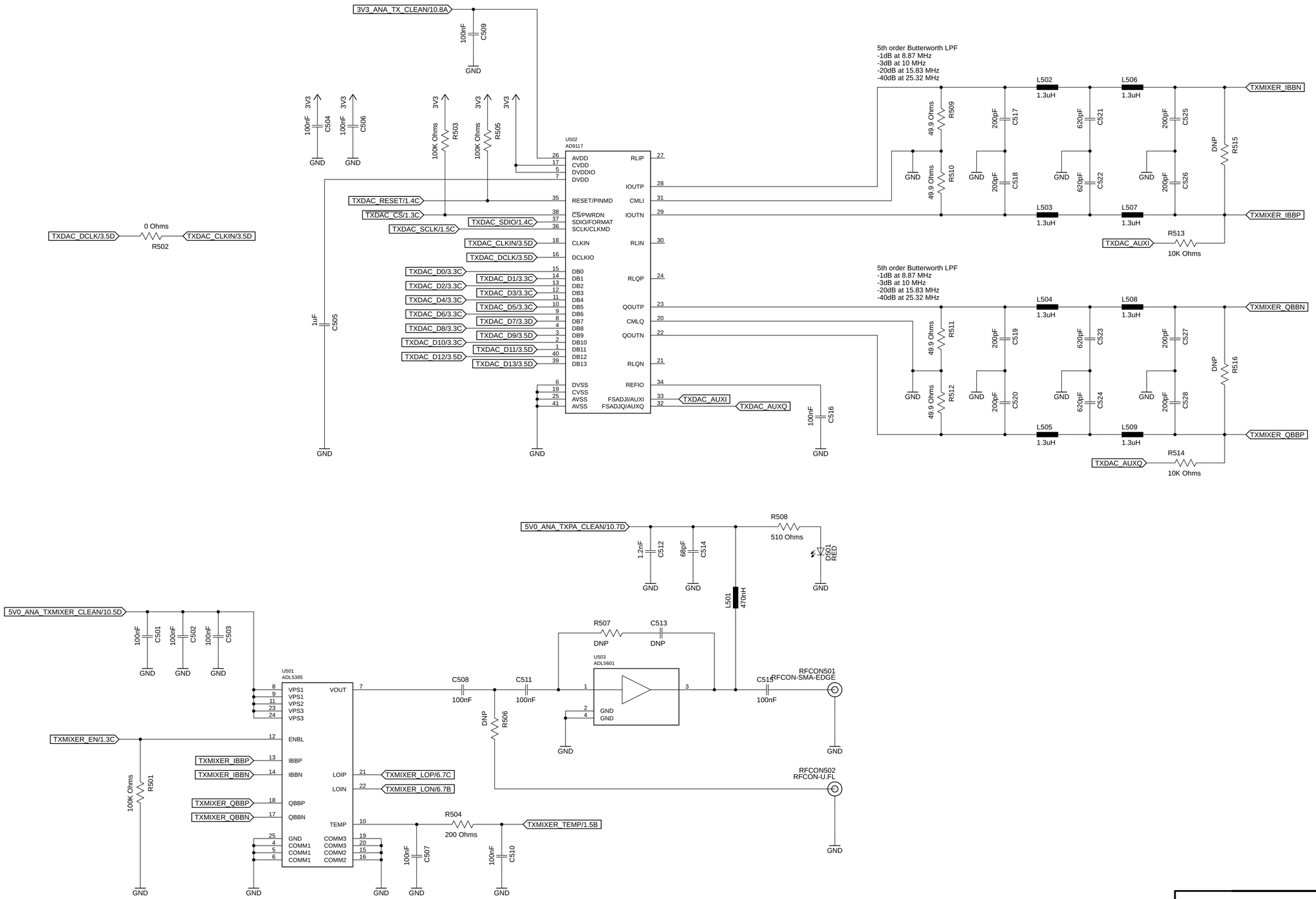

icyradio-main	
Joao Silva	
Sheet: 5/10	TX BB DAC + Upconverting Mixer
Date: 09/07/20 22:15	Rev: 1

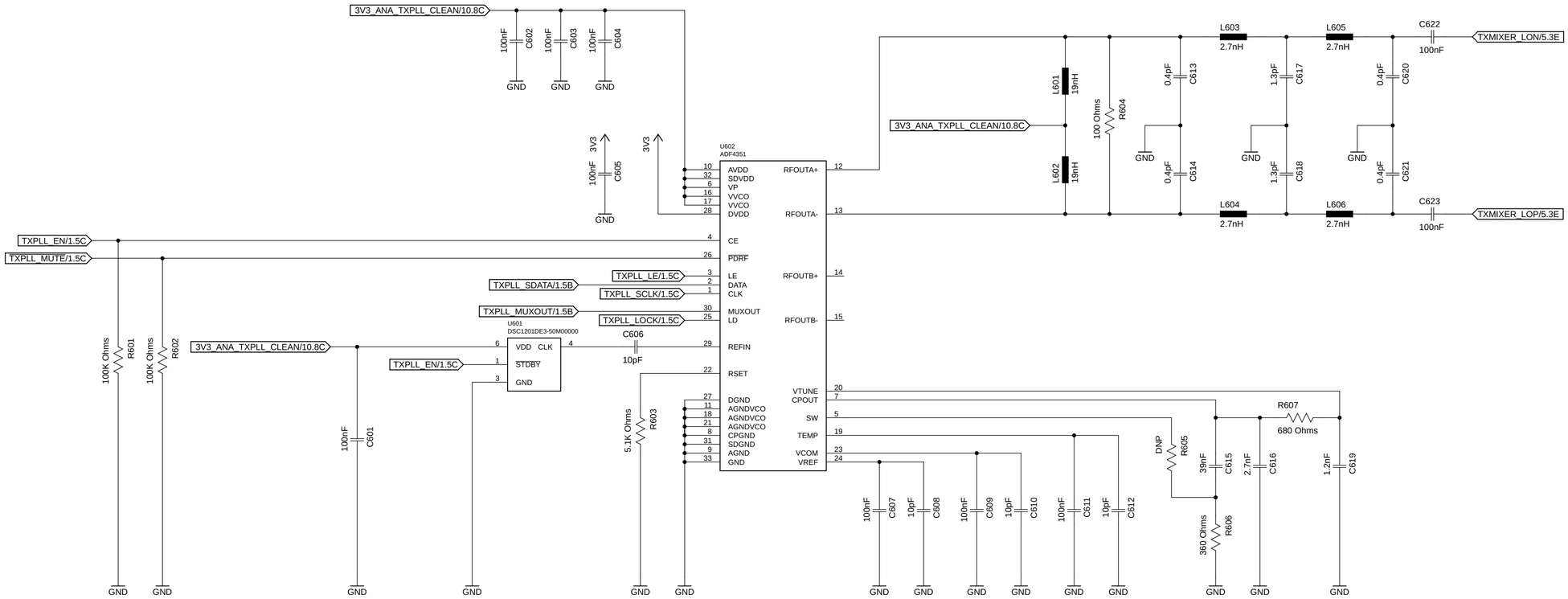

icyradio-main	
Joao Silva	
Sheet: 6/10	TX LO Synthesizer
Date: 09/07/20 22:15	Rev: 1

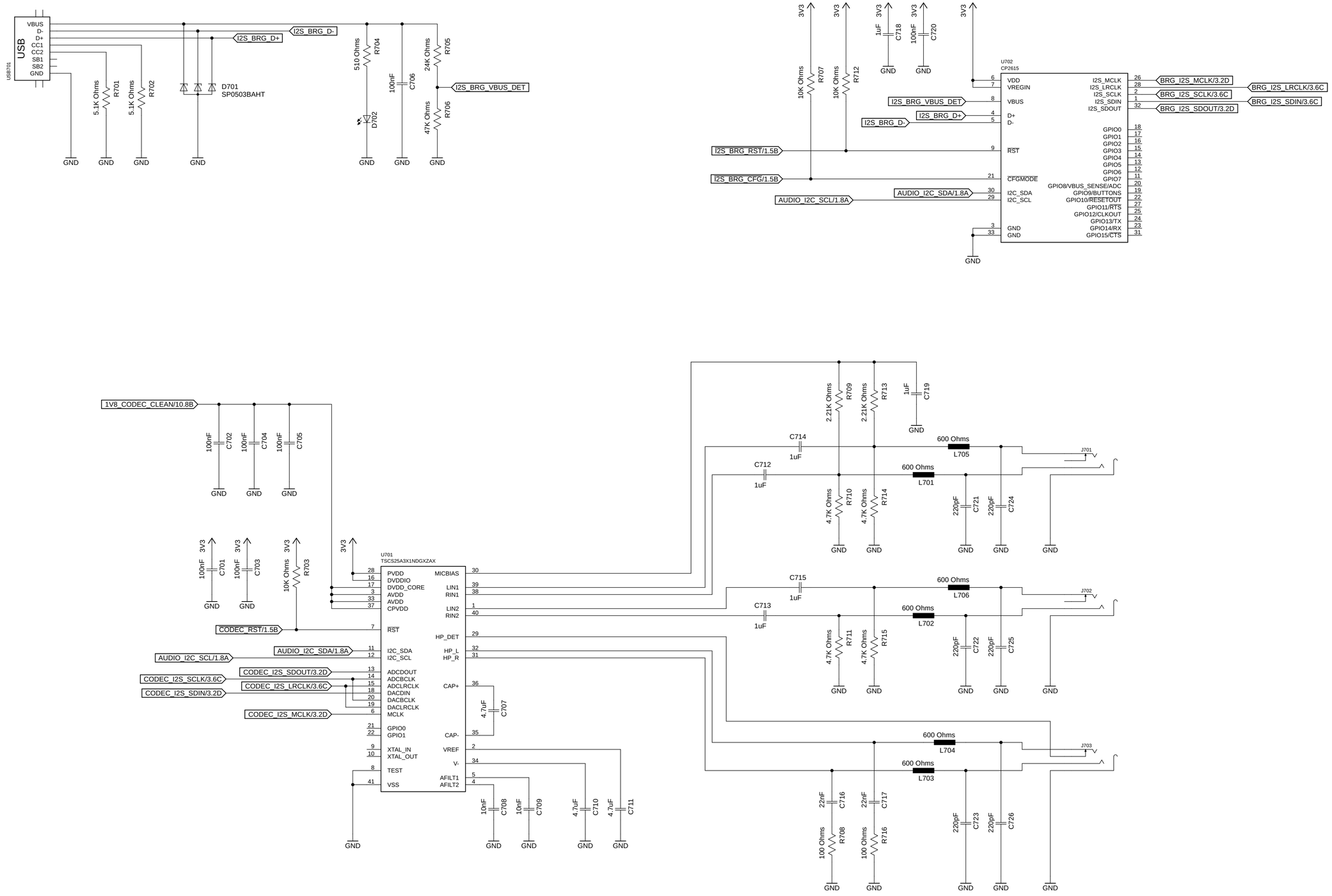

icyradio-main	
Joao Silva	
Sheet: 7/10	USB I2S bridge + CODEC
Date: 09/07/20 22:15	Rev: 1

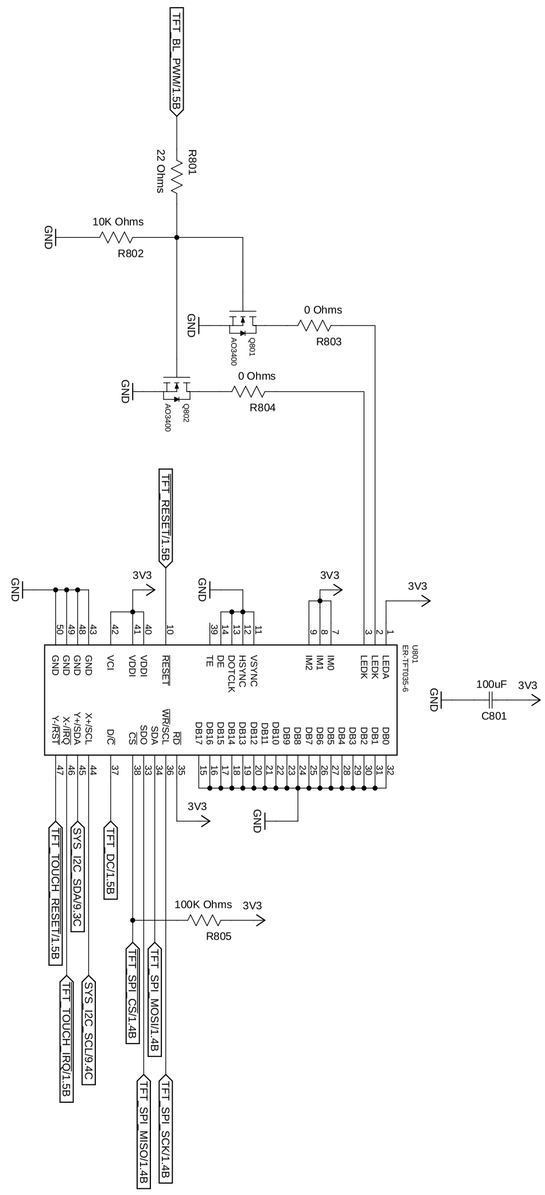

icyradio-main

Joao Silva

Sheet: 8/10

TFT Display

Date: 09/07/20 22:15

Rev: 1

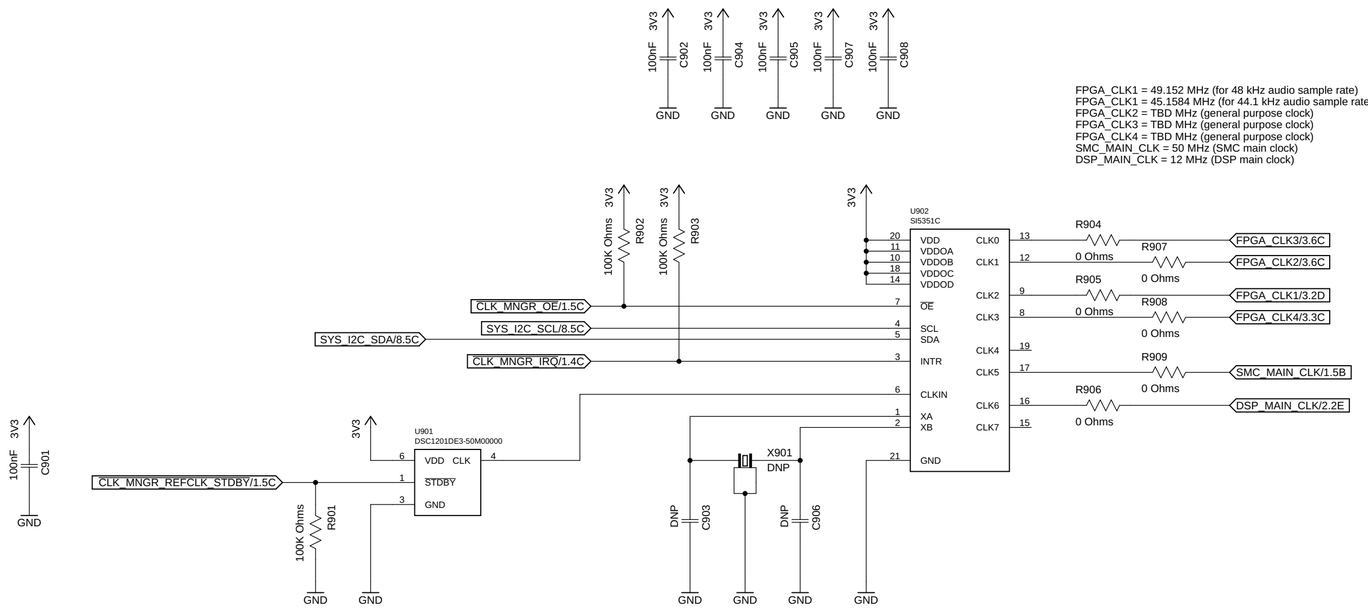

icyradio-main	
Joao Silva	
Sheet: 9/10	Clock generator
Date: 09/07/20 22:15	Rev: 1

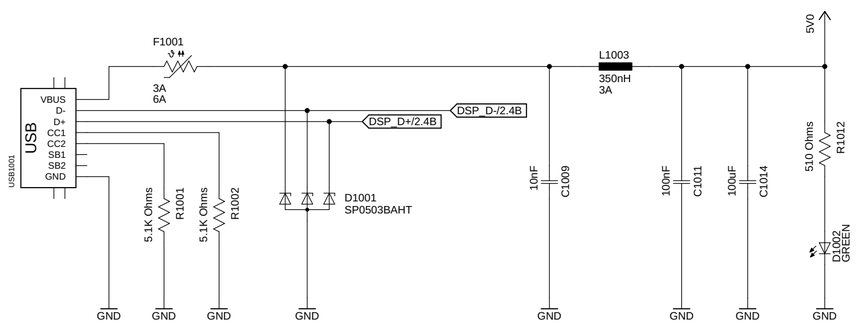

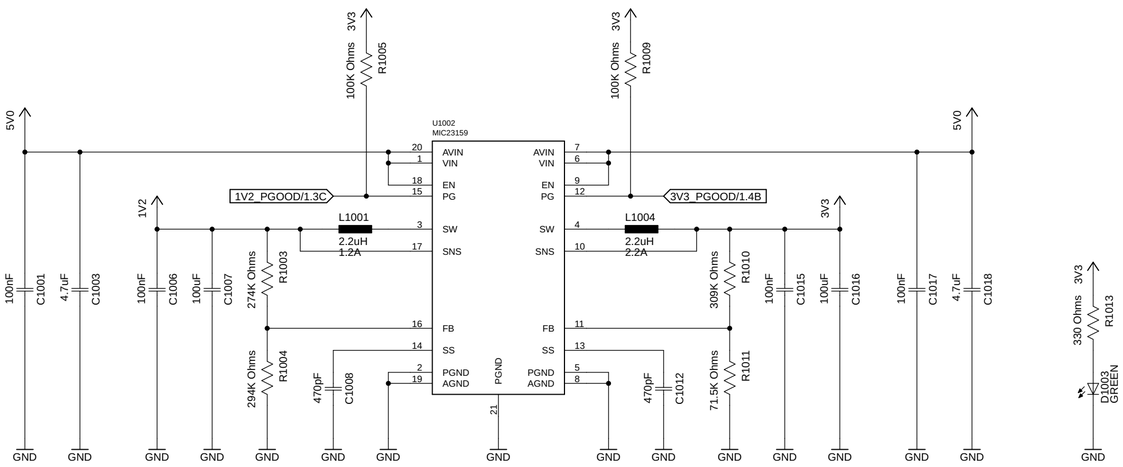

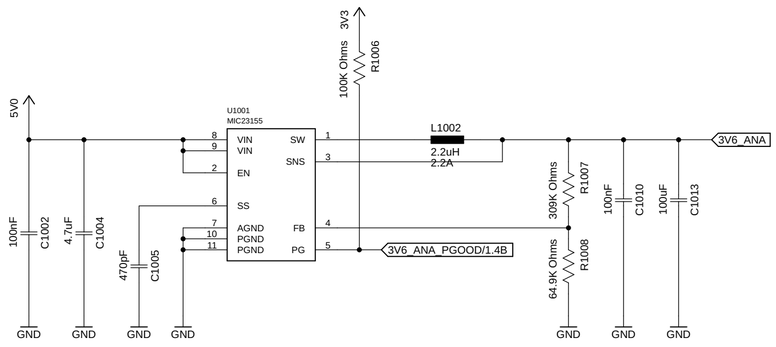

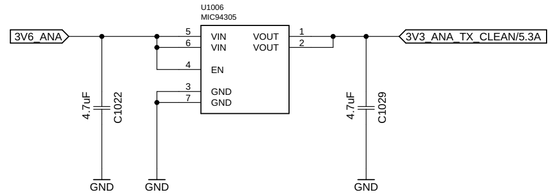

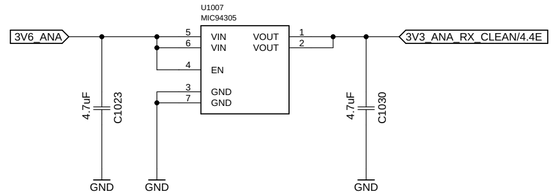

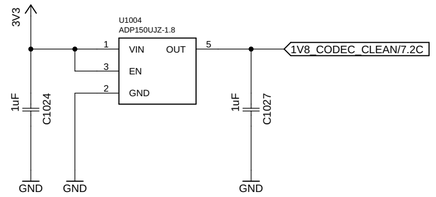

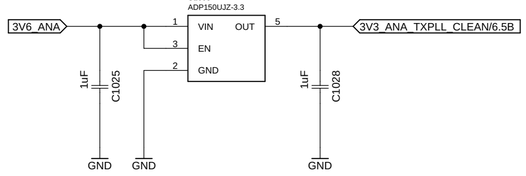

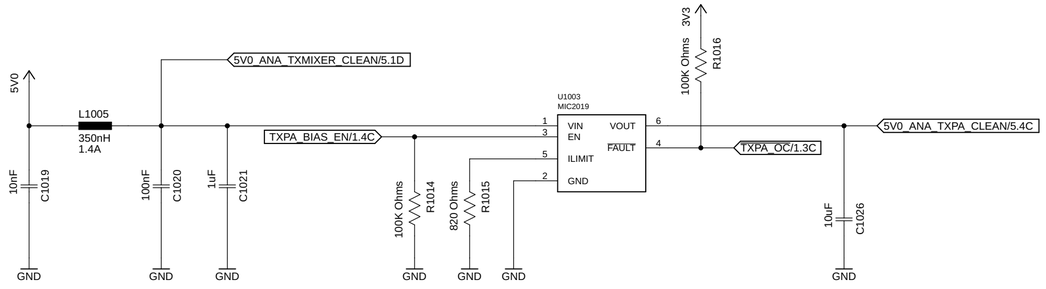

icyradio-main	
Joao Silva	
Sheet: 10/10	Power
Date: 09/07/20 22:15	Rev: 1