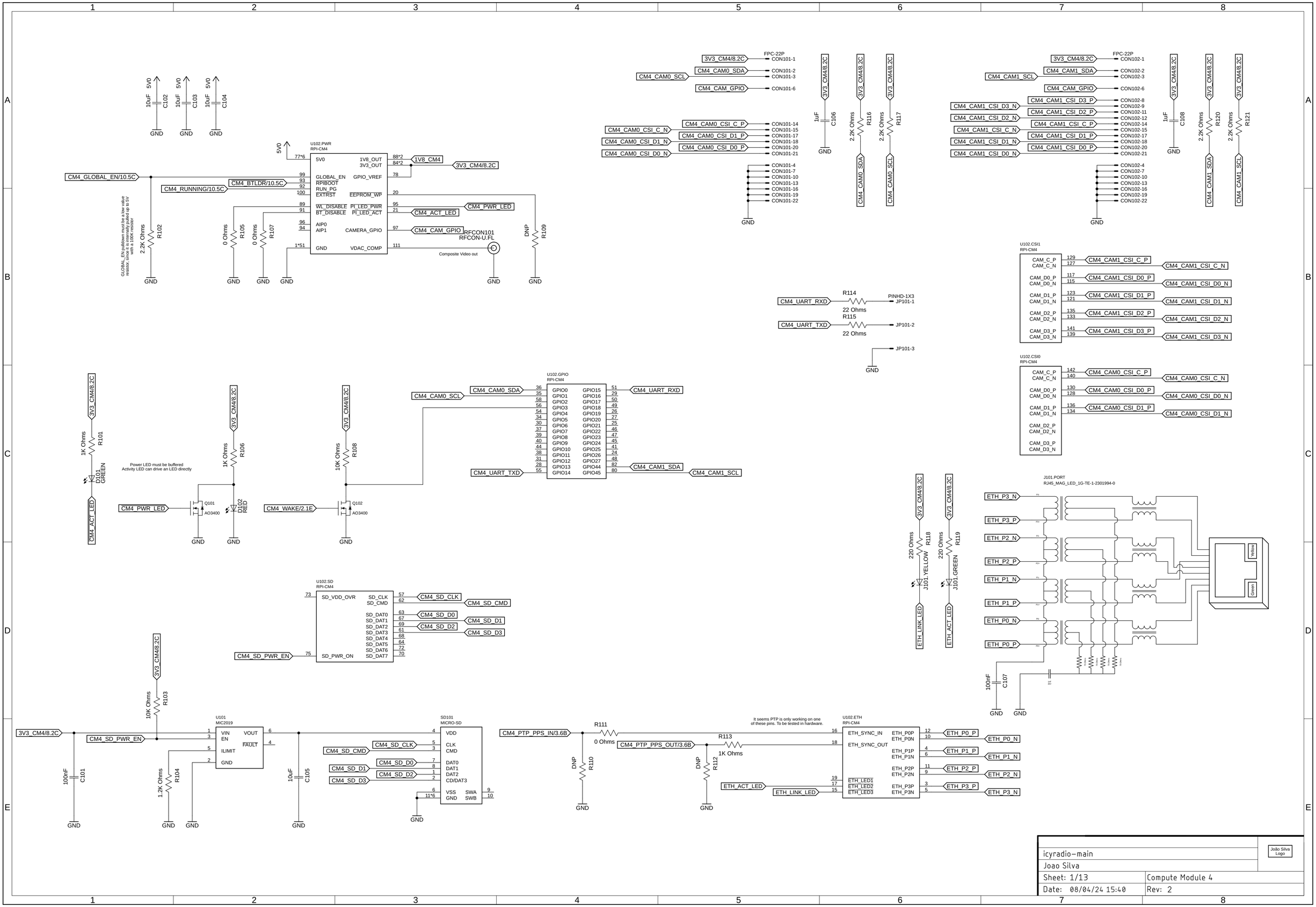
U102.PWR
RPI-CM4
U102.GPIO
RPI-CM4
U102.SD
RPI-CM4
U102.CSI1
RPI-CM4
U102.CSI0
RPI-CM4
U102.ETH
RPI-CM4
U101
MIC2019
SD101
MICRO-SD
J101.PORT
RJ45_MAG_LED_1G-TE-1-2301994-0
FPC-22P
RFCON101
RFCON-U.FL
Composite Video out
PINHD-1X3
Power LED must be buffered
Activity LED can drive an LED directly
It seems PTP is only working on one
of these pins. To be tested in hardware.
GLOBAL_EN pulldown must be a low value
resistor, since it is internally pulled up to 5V
with a 100K resistor
icyradio-main
Joao Silva
Sheet: 1/13
Compute Module 4
Date: 08/04/24 15:40
Rev: 2
João Silva
Logo

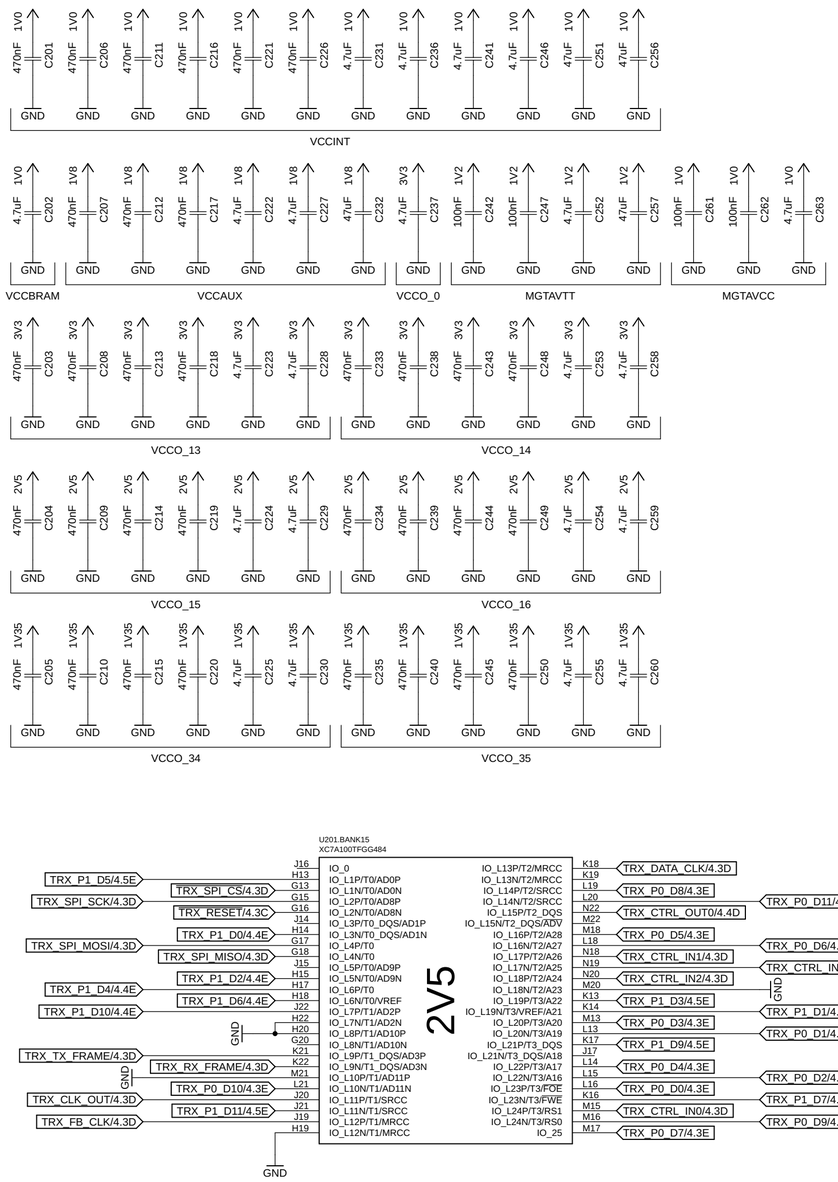

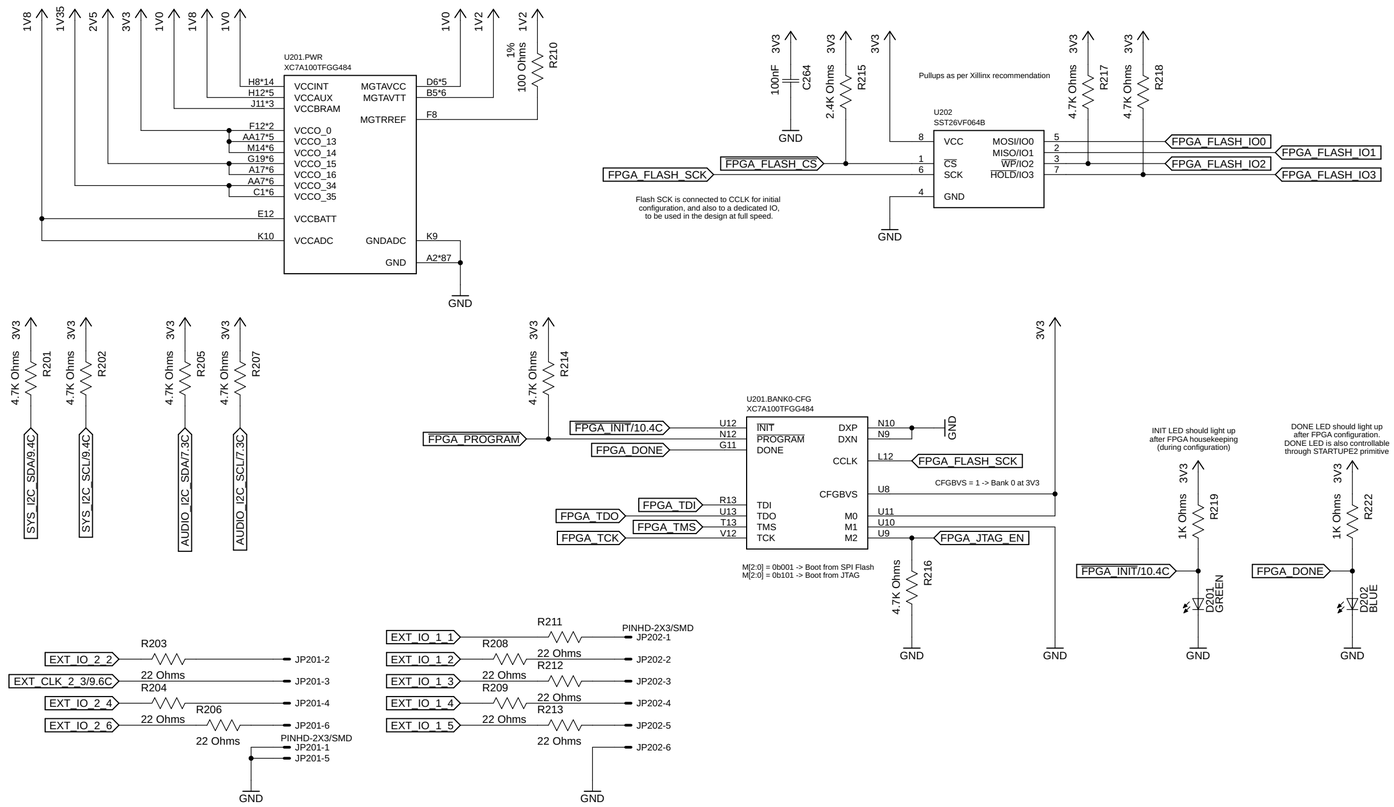

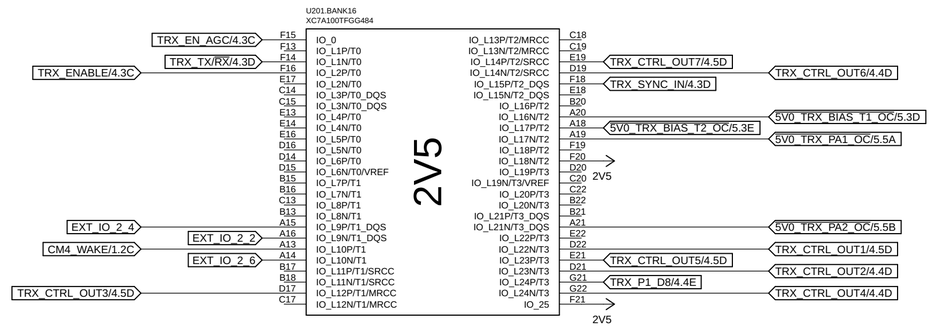

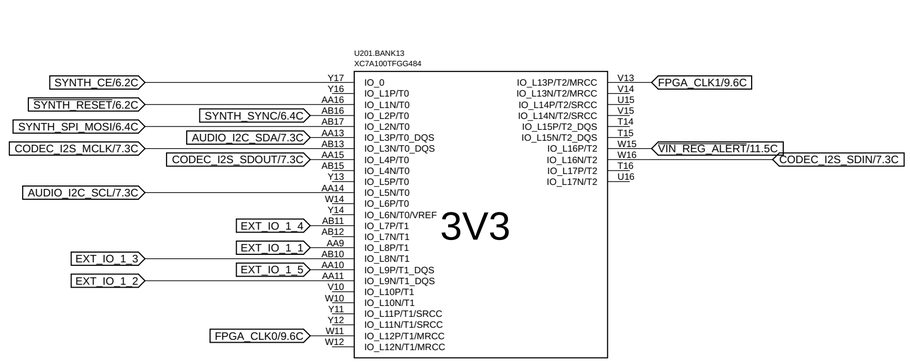

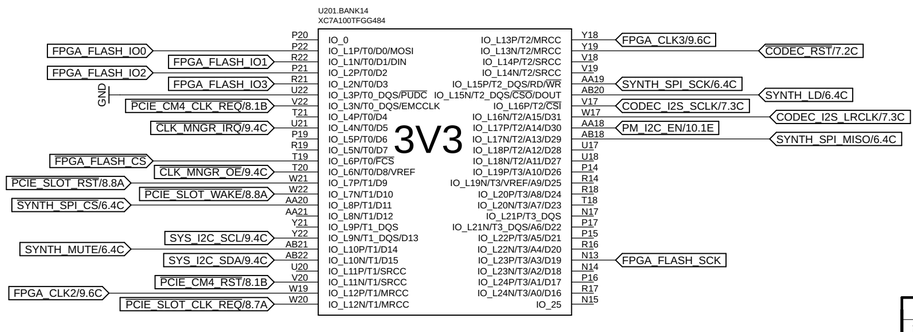

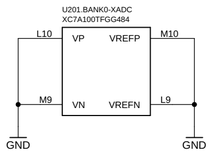

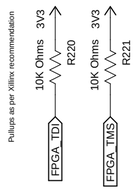

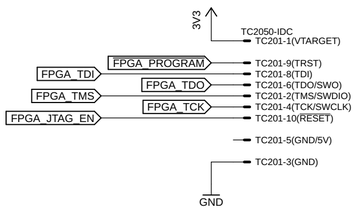

icyradio-main	
Joao Silva	
Sheet: 2/13	FPGA
Date: 08/04/24 15:40	Rev: 2

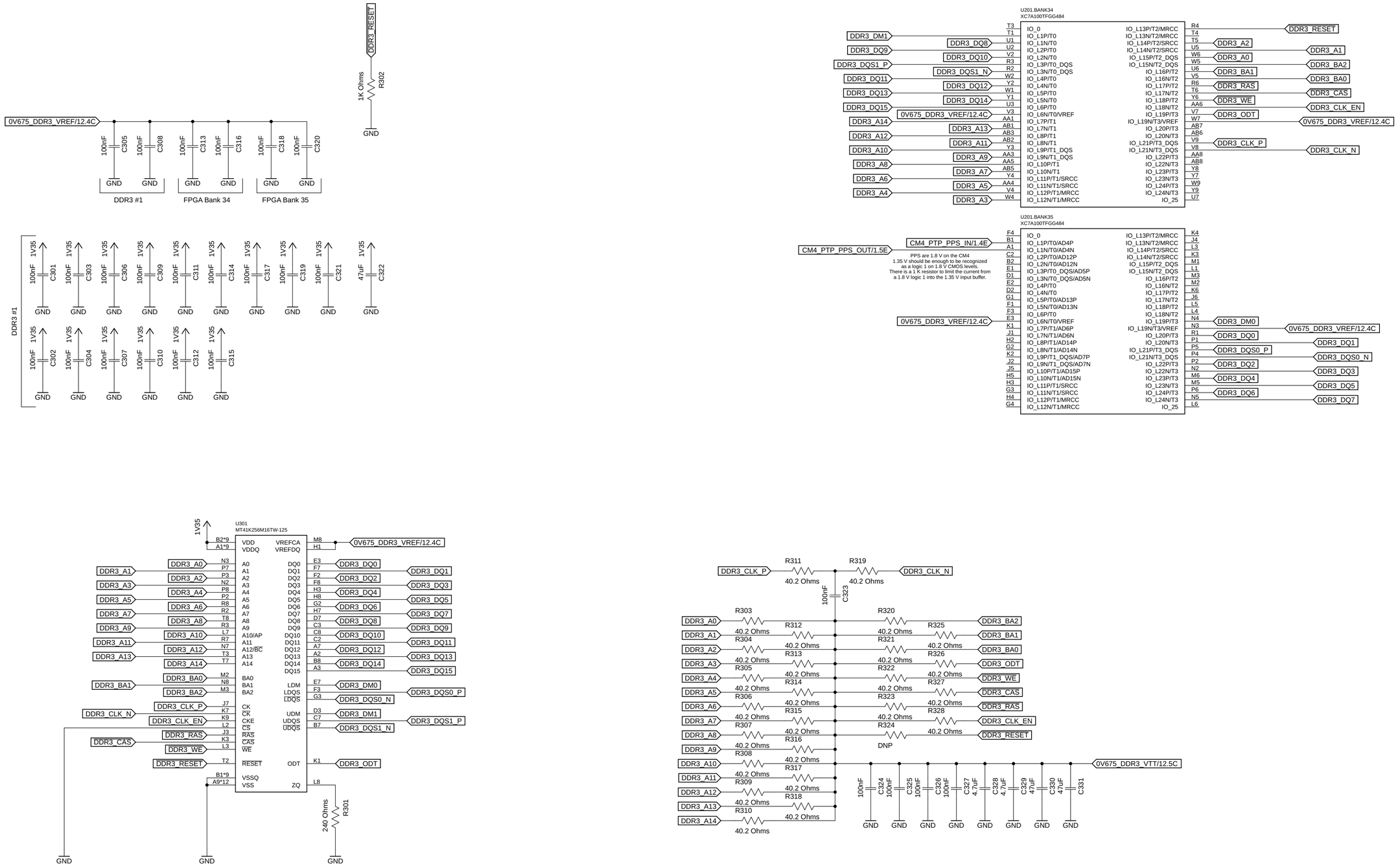

icyradio-main	
Joao Silva	
Sheet: 3/13	DDR3
Date: 08/04/24 15:40	Rev: 2

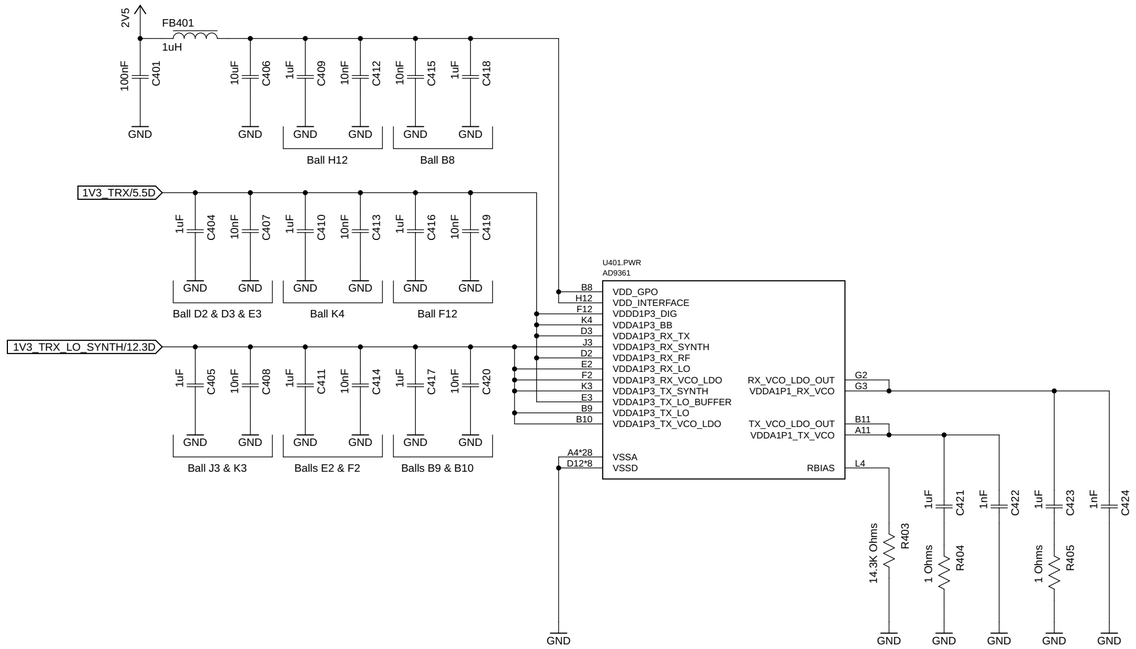

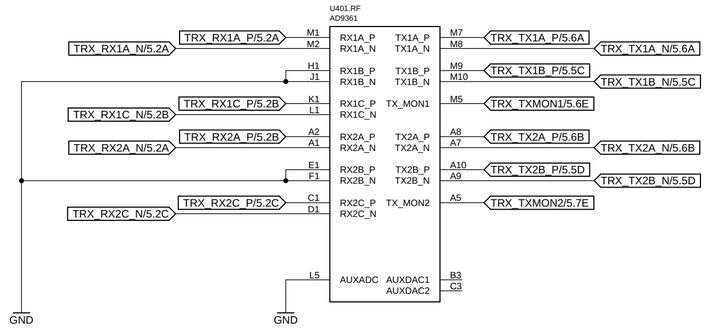

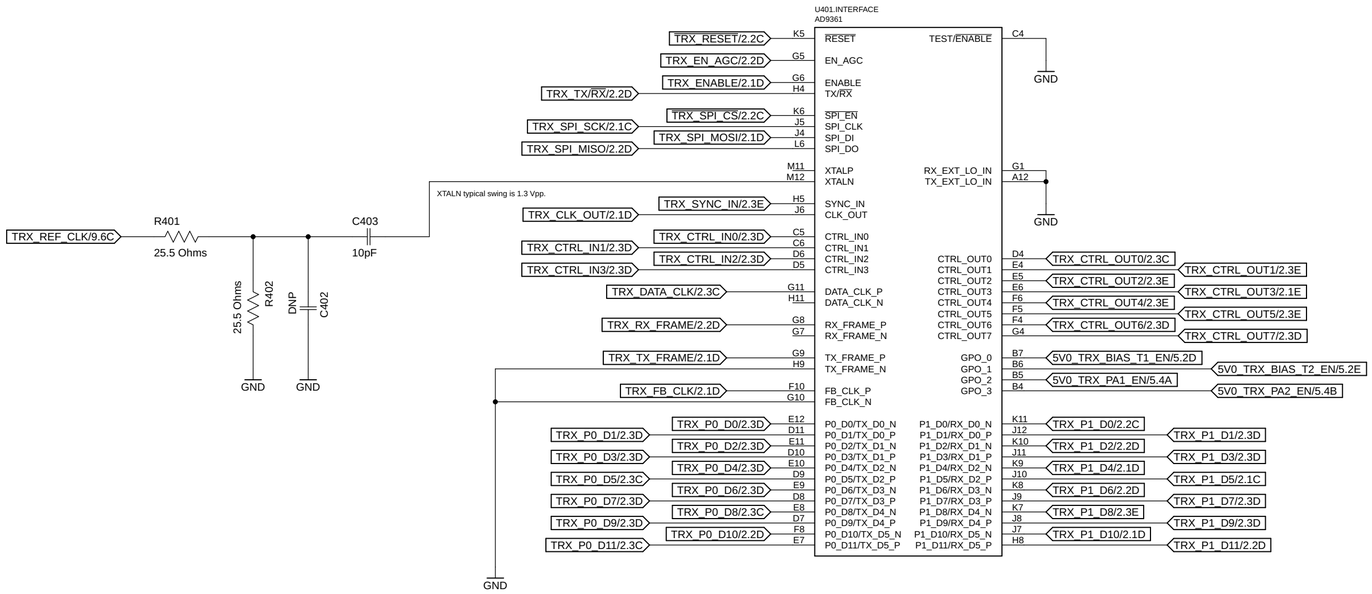

GPOs are used to control the power switches to the Bias-Ts and PAs.
GPO0 should be used for RX Bias-T on channel 1
GPO1 should be used for RX Bias-T on channel 2
This is because those are able to be mapped to gain table bits, facilitating the use of external LNAs.
There is no specific GPO assignment required for PA bias.

Warning: Always use DC blocks when connecting to the RX inputs with Bias-Ts, if the equipment cannot tolerate a DC voltage. This is because, by default, the Bias-Ts are enabled on transceiver reset!

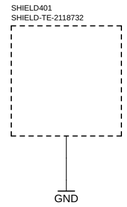

icyradio-main	
Joao Silva	
Sheet: 4/13	RF Transceiver
Date: 08/04/24 15:40	Rev: 2

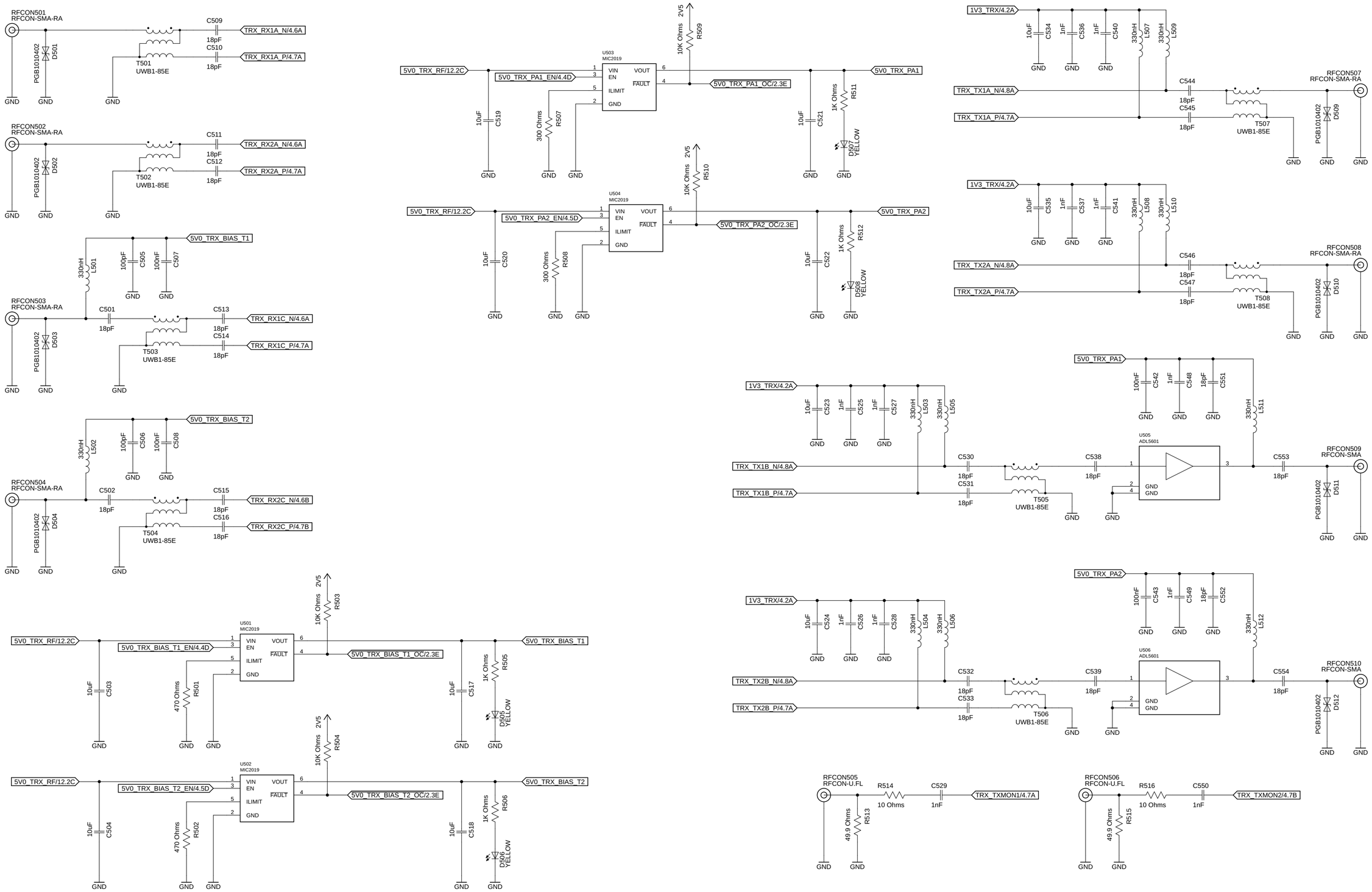

icyradio-main	
Joao Silva	
Sheet: 5/13	RF Interface
Date: 08/04/24 15:40	Rev: 2

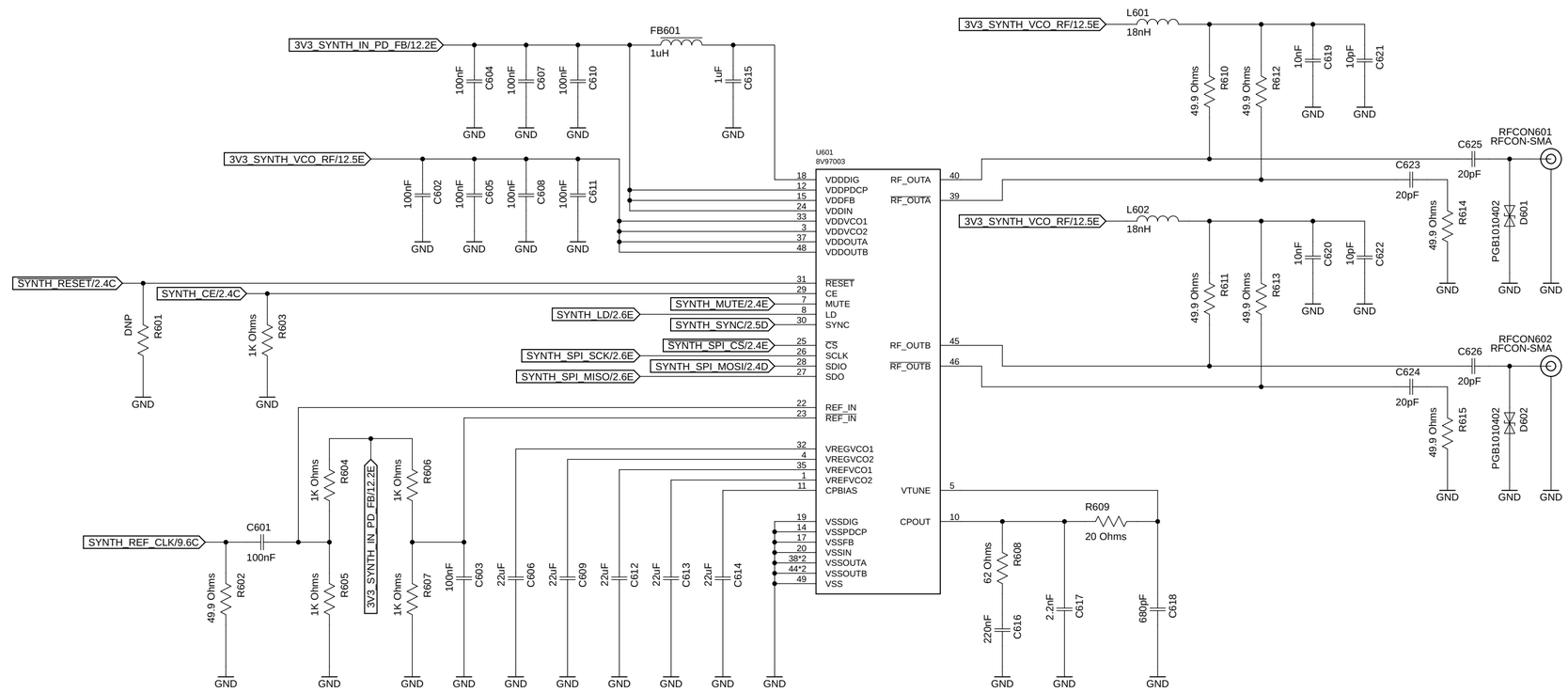

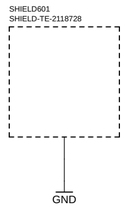

icyradio-main	
Joao Silva	
Sheet: 6/13	mmWave Synthesizer
Date: 08/04/24 15:40	Rev: 2

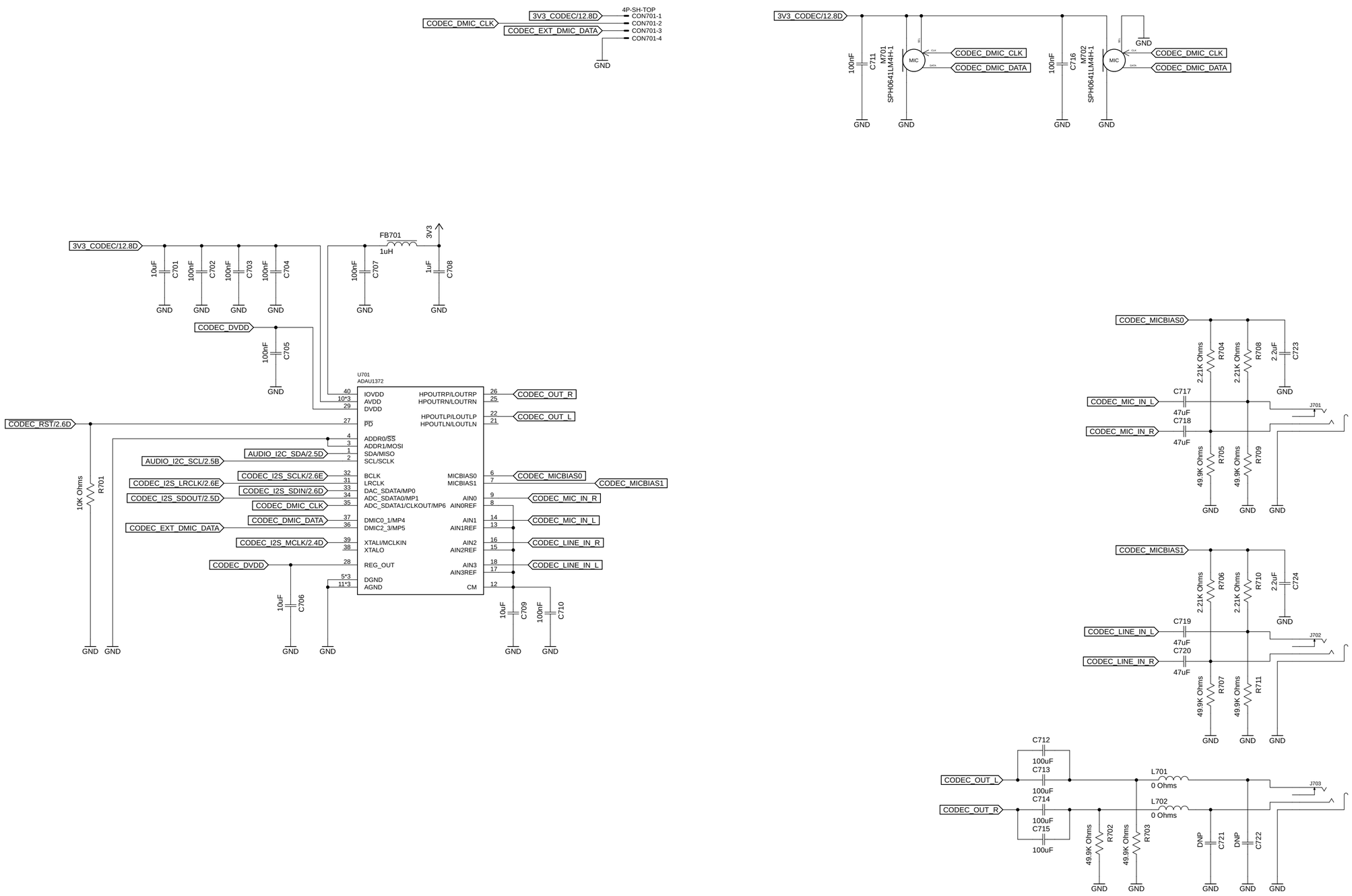

icyradio-main	
Joao Silva	
Sheet: 7/13	Audio CODEC
Date: 08/04/24 15:40	Rev: 2

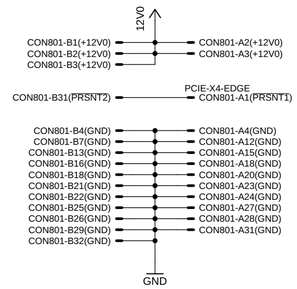

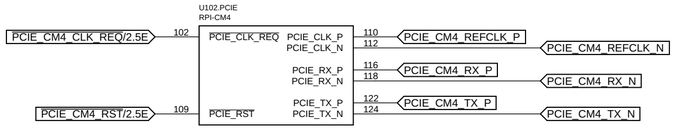

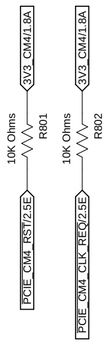

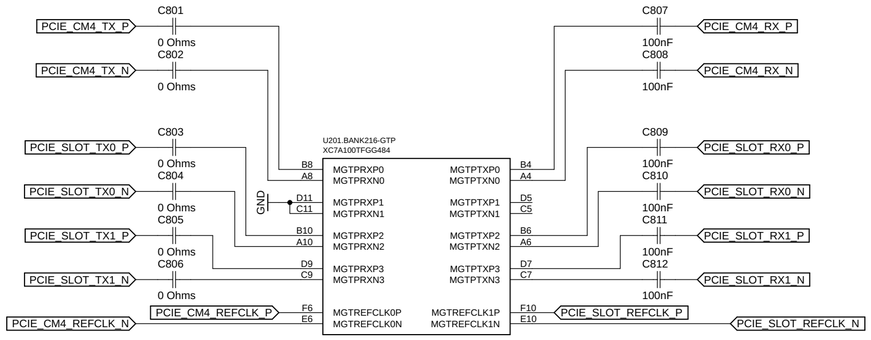

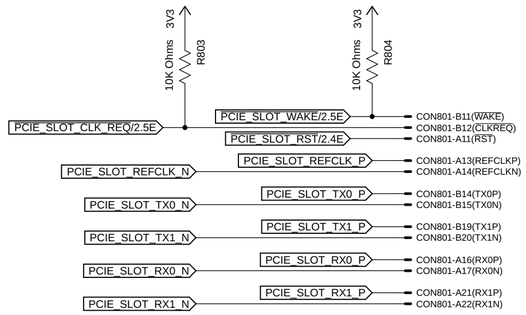

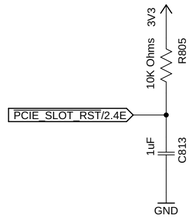

icyradio-main	
Joao Silva	
Sheet: 8/13	PCI Express
Date: 08/04/24 15:40	Rev: 2

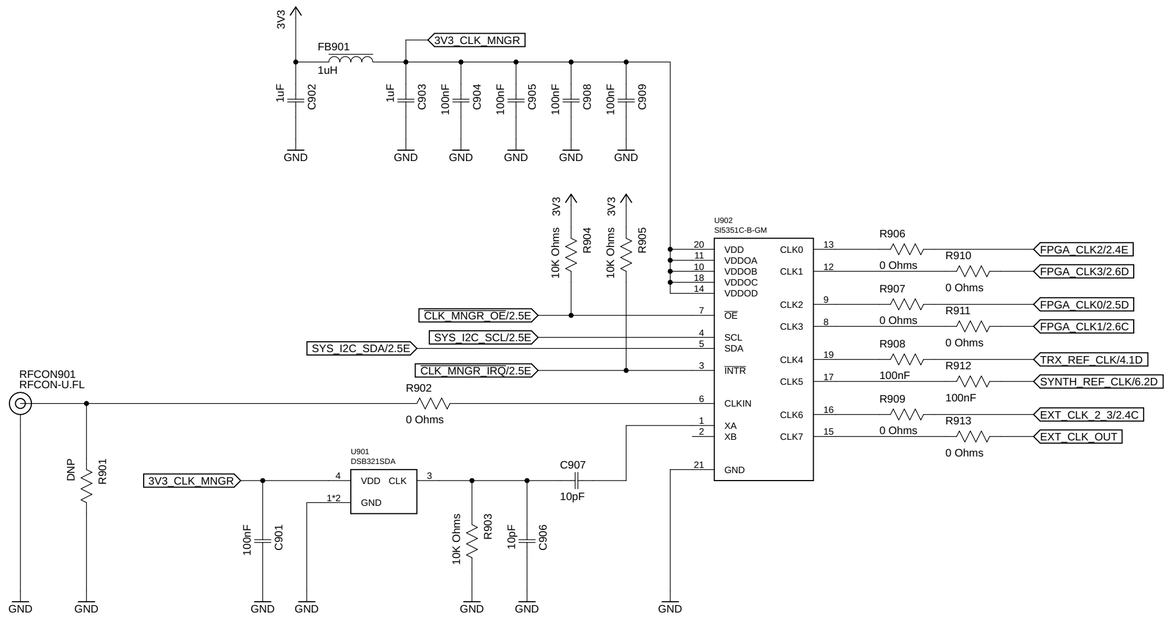

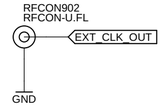

icyradio-main	
Joao Silva	
Sheet: 9/13	Clock generator
Date: 08/04/24 15:40	Rev: 2

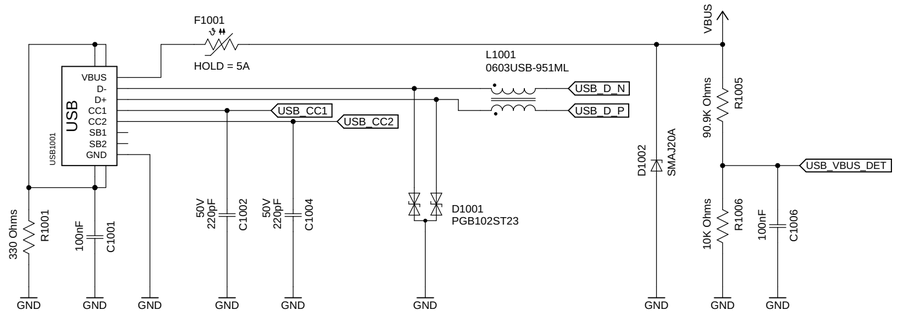

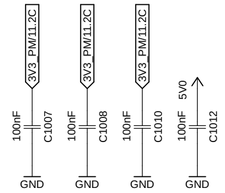

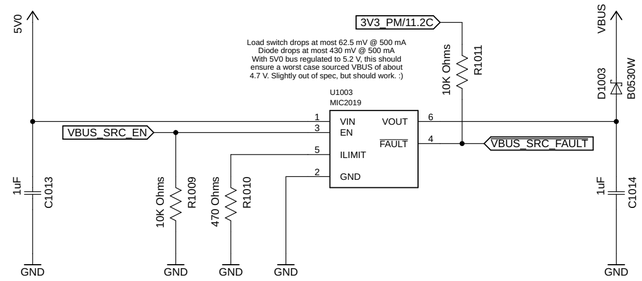

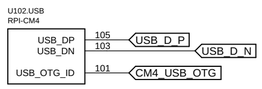

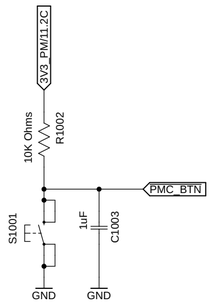

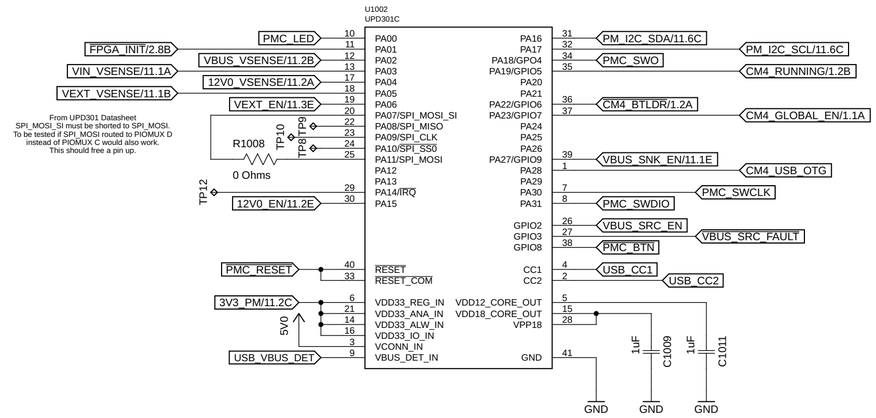

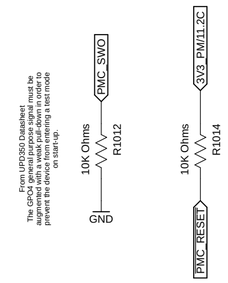

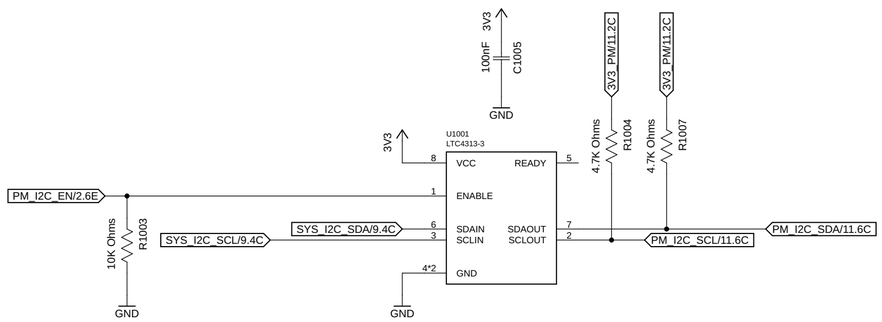

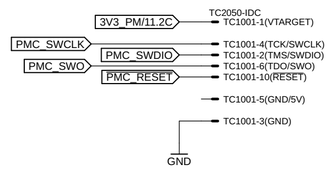

icyradio-main	
Joao Silva	
Sheet: 10/13	Power Management
Date: 08/04/24 15:40	Rev: 2

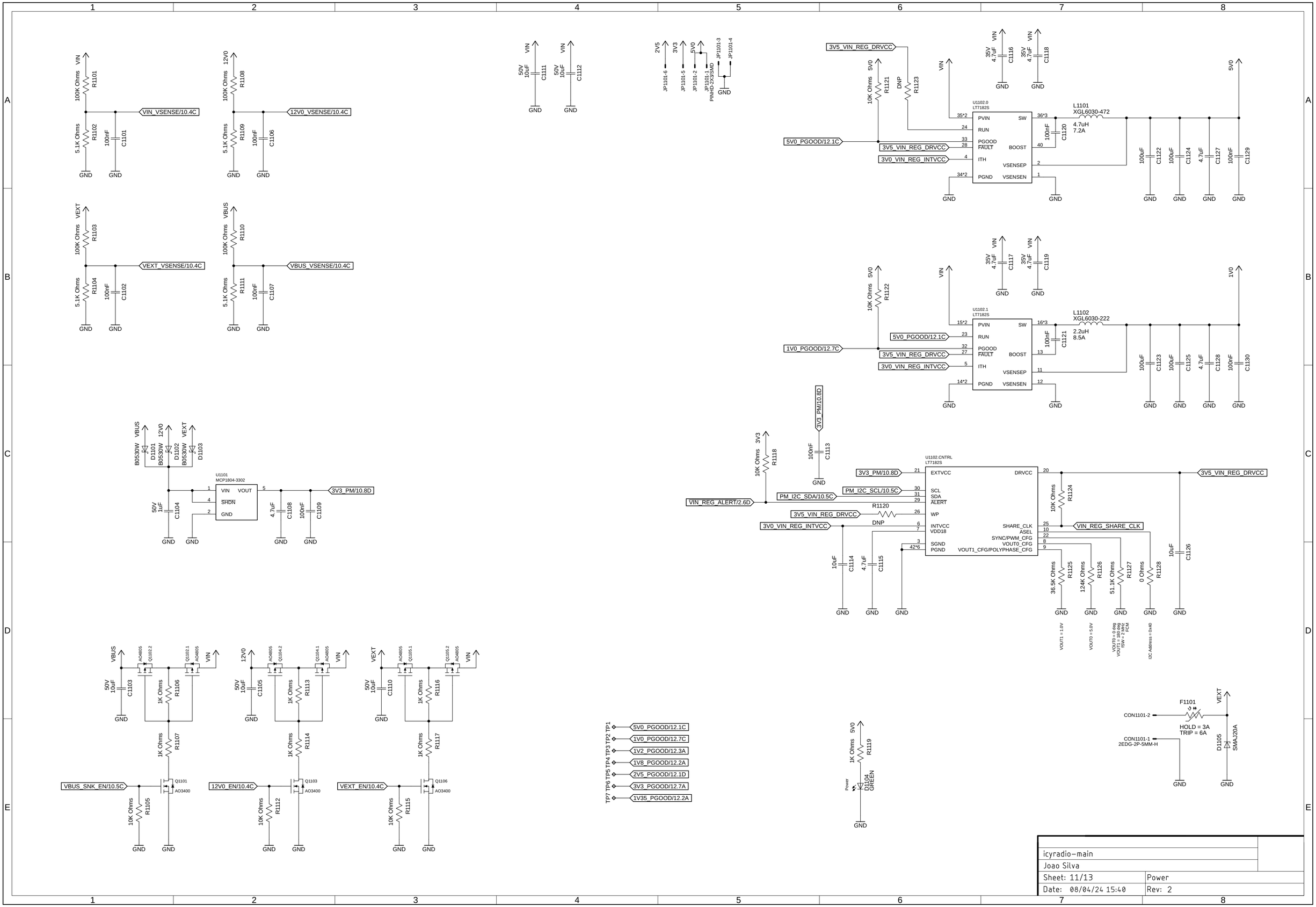
VIN_VSENSE/10.4C
12V0_VSENSE/10.4C
VEXT_VSENSE/10.4C
VBUS_VSENSE/10.4C
U1102.0
LT7182S
L1101
XGL6030-472
4.7uH
7.2A
U1102.1
LT7182S
L1102
XGL6030-222
2.2uH
8.5A
U1101
MCP1804-3302
3V3_PM/10.8D
U1102.CNTRL
LT7182S
3V5_VIN_REG_DRVCC
VIN_REG_ALERT/2.6D
PM_I2C_SCL/10.5C
PM_I2C_SDA/10.5C
VIN_REG_SHARE_CLK
VBUS_SNK_EN/10.5C
12V0_EN/10.4C
VEXT_EN/10.4C
5V0_PGOOD/12.1C
1V0_PGOOD/12.7C
1V2_PGOOD/12.3A
1V8_PGOOD/12.2A
2V5_PGOOD/12.1D
3V3_PGOOD/12.7A
1V35_PGOOD/12.2A
F1101
HOLD = 3A
TRIP = 6A
CON1101-2
CON1101-1
2EDG-2P-5MM-H
D1105
SMAJ20A
D1104
GREEN
icyradio-main
Joao Silva
Sheet: 11/13
Power
Date: 08/04/24 15:40
Rev: 2

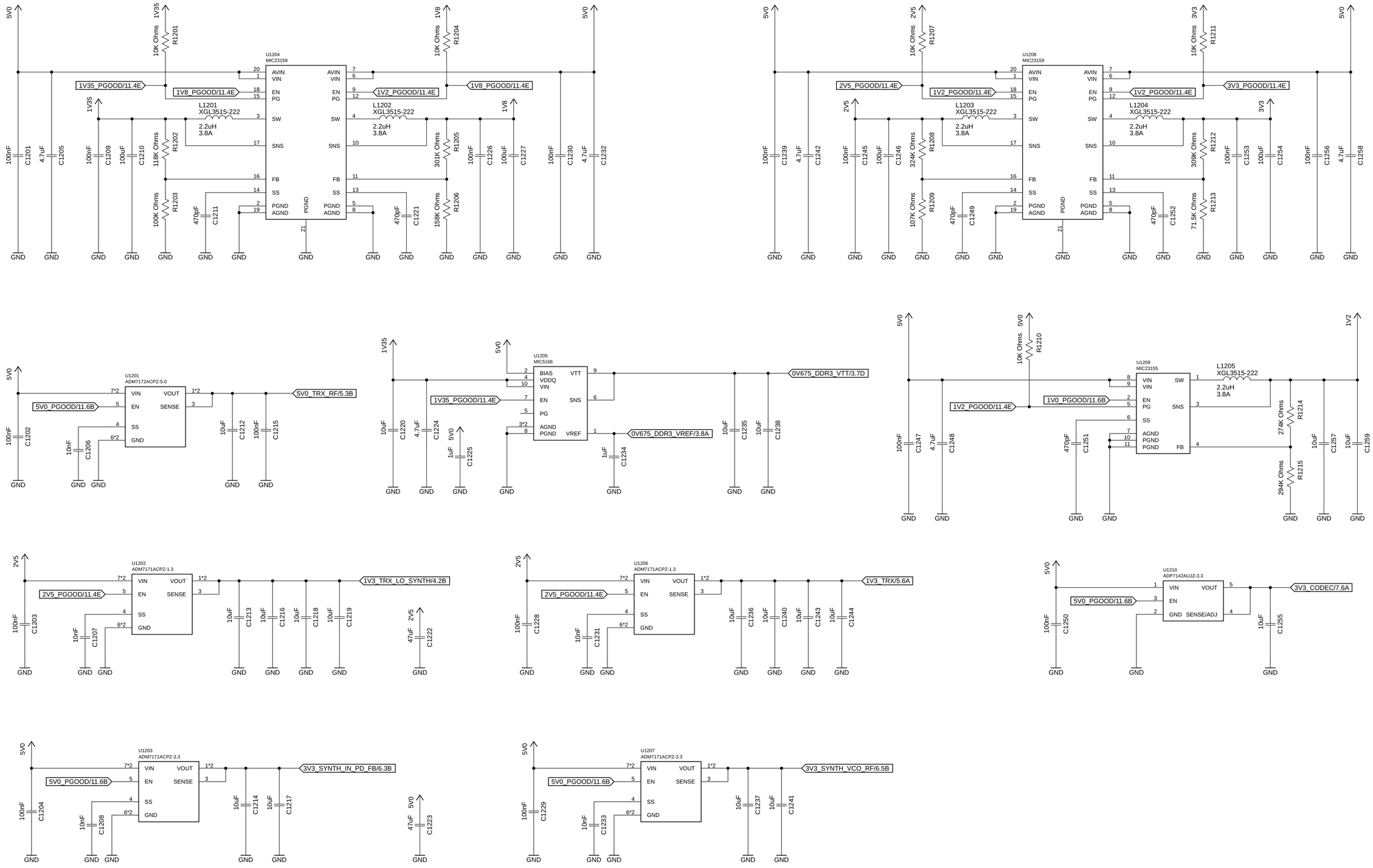

icyradio-main	
Joao Silva	
Sheet: 12/13	Power
Date: 08/04/24 15:40	Rev: 2

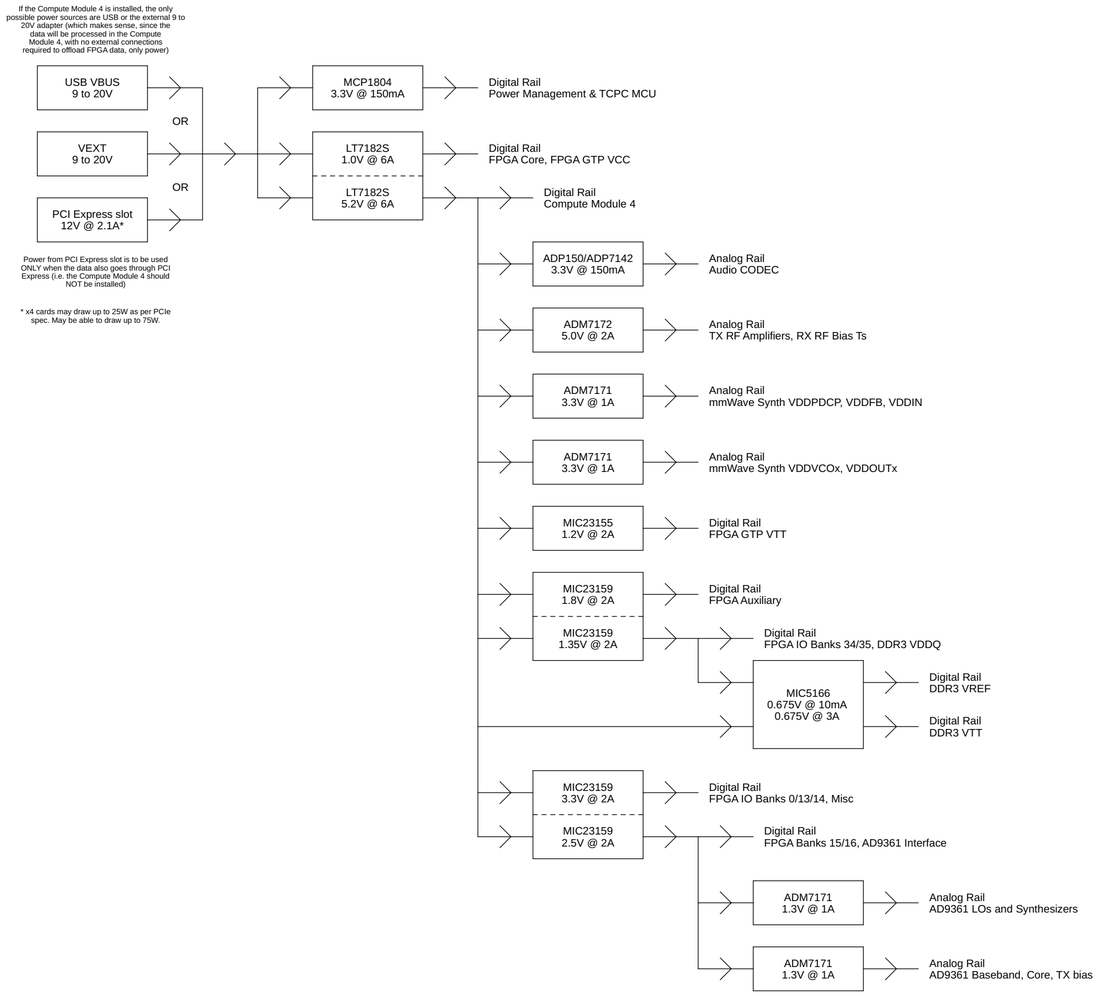

Power Sequence

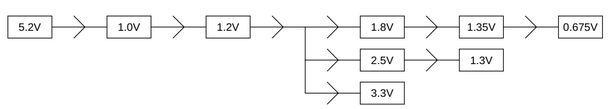

icyradio-main	
Joao Silva	
Sheet: 13/13	Power tree
Date: 08/04/24 15:40	Rev: 2