DSC1001/3/4

1.8V-3.3V Low-Power Precision CMOS Oscillators

Features

- Frequency Range: 1 MHz to 150 MHz
- Exceptional Stability over Temperature
  - ±10 ppm, ±20 ppm, ±25 ppm, ±50 ppm
- Operating Voltage
  - 1.7 to 3.6V
- Operating Temperature Range
  - Ext. Industrial –40°C to 105°C
  - Industrial –40°C to 85°C
  - Commercial –20°C to 70°C
- Low Operating and Standby Current
  - 6 mA Operating (1 MHz)
  - 15 µA Standby (Max.)
- Ultra Miniature Footprint
  - 2.5 mm x 2.0 mm x 0.85 mm
  - 3.2 mm x 2.5 mm x 0.85 mm
  - 5.0 mm x 3.2 mm x 0.85 mm
  - 7.0 mm x 5.0 mm x 0.85 mm
- MIL-STD 883 Shock and Vibration Resistant
- Pb Free, RoHS, Reach SVHC Compliant
- AEC-Q100 Reliability Qualified

Applications

- Mobile Applications
- Consumer Electronics
- Portable Electronics
- DVR, CCTV, Surveillance Cameras
- Low Profile Applications
- Industrial Applications

Benefits

- Pin for Pin “Drop-In” Replacement for Industry Standard Oscillators
- Semiconductor Level Reliability, Significantly Higher than Quartz
- Short Mass Production Lead Times
- Longer Battery Life/Reduced Power Consumption
- Compact Plastic Package
- Cost Effective

General Description

The DSC1001/3/4 is a silicon MEMS based CMOS family of oscillators that offers excellent jitter and stability performance over a wide range of supply voltages and temperatures. The device operates from 1 MHz to 150 MHz with supply voltages between 1.8 to 3.3 volts and temperature ranges up to –40°C to 105°C.

The DSC1001/3/4 incorporate an all silicon resonator that is extremely robust and nearly immune to stress related fractures, common to crystal based oscillators. Without sacrificing the performance and stability required of today’s systems, a crystal-less design allows for a higher level of reliability, making the DSC1001/3/4 ideal for rugged, industrial, and portable applications where stress, shock, and vibration can damage quartz crystal based systems.

Available in industry standard packages, the DSC1001/3/4 can be “dropped-in” to the same PCB footprint as standard crystal oscillators.

The DSC1003 and DSC1004 have the same functionality and performance as the DSC1001, but feature higher output drives of 25 pF and 40 pF, respectively.

Package Types

DSC1001/3/4
CDFN/DFN
(Top View)

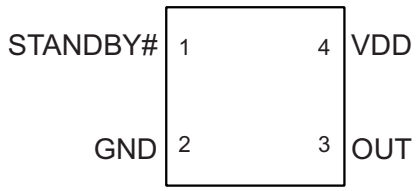

© 2017 Microchip Technology Inc.

Block Diagram

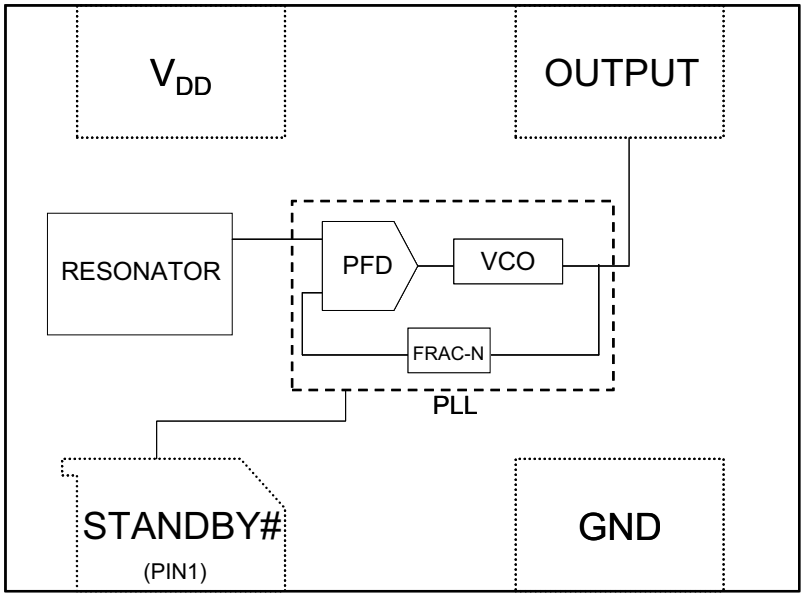

© 2017 Microchip Technology Inc.

1.0 ELECTRICAL CHARACTERISTICS

Absolute Maximum Ratings †

Input Voltage (V_{IN}) .....–0.3V to V_{DD} + 0.3V
ESD Protection ..... 4 kV HBM, ±200V MM, 1.5 kV CDM

Recommended Operating Conditions

Supply Voltage (V_{DD}) ..... +1.7V to +3.6V
Output Load (Z_L) ..... R > 10 kΩ, C ≤ 15 pF

† **Notice:** Stresses above those listed under "Absolute Maximum Ratings" may cause permanent damage to the device. This is a stress rating only and functional operation of the device at those or any other conditions above those indicated in the operational sections of this specification is not intended. Exposure to maximum rating conditions for extended periods may affect device reliability.

TABLE 1-1: DC CHARACTERISTICS

Electrical Characteristics: V_{DD} = 1.8 to 3.3V; T_A = +85°C unless otherwise specified.

Parameters	Sym.	Min.	Typ.	Max.	Units	Conditions	
Frequency	F_0	1	—	150	MHz	Single Frequency	
Frequency Tolerance	Δf	—	—	±10	ppm	Includes frequency variations due to initial tolerance, temperature and power supply voltage	
		—	—	±20			
		—	—	±25			
		—	—	±50			
Aging	Δf	—	—	±5	ppm	1 year @ +25°C	
Supply Current, Standby	I_{DD}	—	—	15	µA	T = +25°C	
Output Startup Time (Note 1)	t_{SU}	—	1.0	1.3	ms	T = +25°C	
Output Disable Time	t_{DA}	—	20	100	ns	—	
Output Duty Cycle	SYM	45	—	55	%	—	
Input Logic Level High	V_{IH}	0.75 x V_{DD}	—	—	V	—	
Input Logic Level Low	V_{IL}	—	—	0.25 x V_{DD}	V	—	
V_{DD} = 1.8V							
Supply Current, No Load	I_{DD}	—	6.0	6.3	mA	1 MHz	C_L = 0 pF, R_L = ∞, T = +25°C
		—	6.5	7.1		27 MHz	
		—	7.2	8.5		70 MHz	
		—	8.3	11.9		150 MHz	
Output Logic Level High	V_{OH}	0.8 x V_{DD}	—	—	V	–6 mA, DSC1004, C_L = 40 pF	
		0.8 x V_{DD}	—	—		–6 mA, DSC1003, C_L = 25 pF	
		0.8 x V_{DD}	—	—		–4 mA, DSC1001, C_L = 15 pF	
Output Logic Level Low	V_{OL}	—	—	0.2 x V_{DD}	V	6 mA, DSC1004, C_L = 40 pF	
		—	—	0.2 x V_{DD}		6 mA, DSC1003, C_L = 25 pF	
		—	—	0.2 x V_{DD}		4 mA, DSC1001, C_L = 15 pF	

Note 1: t_{SU} is time to stable output frequency after V_{DD} is applied. t_{SU} and t_{EN} (after EN is asserted) are identical values.

2: Measured over 50k clock cycles.

© 2017 Microchip Technology Inc.

TABLE 1-1: DC CHARACTERISTICS (CONTINUED)

Electrical Characteristics: V_{DD} = 1.8 to 3.3V; T_A = +85°C unless otherwise specified.

Parameters	Sym.	Min.	Typ.	Max.	Units	Conditions	
Output Transition Rise Time	t_R	—	1.4	3.0	ns	DSC1001, C_L = 15 pF	T = +25°C, 20% to 80%
		—	1.5	3.0		DSC1003, C_L = 25 pF	
		—	1.8	3.0		DSC1004, C_2 = 40 pF	
Output Transition Fall Time	t_F	—	1.0	3.0	ns	DSC1001, C_L = 15 pF	T = +25°C, 20% to 80%
		—	1.1	3.0		DSC1003, C_L = 25 pF	
		—	1.2	3.0		DSC1004, C_2 = 40 pF	
Jitter, Max. Cycle-to-Cycle	J_{CC}	—	60	—	ps	f = 100 MHz (Note 2)	
Period Jitter	J_P	—	10	15	ps_{RMS}	f = 100 MHz (Note 2)	
V_{DD} = 2.5V							
Supply Current, No Load	I_{DD}	—	6.0	6.4	mA	1 MHz	C_L = 0 pF, R_L = ∞, T = +25°C
		—	6.7	7.5		27 MHz	
		—	7.7	9.4		70 MHz	
		—	9.6	13.9		150 MHz	
Output Logic Level High	V_{OH}	0.9 x V_{DD}	—	—	V	–6 mA, DSC1004, C_L = 40 pF	
		0.8 x V_{DD}	—	—		–6 mA, DSC1003, C_L = 25 pF	
		0.8 x V_{DD}	—	—		–4 mA, DSC1001, C_L = 15 pF	
Output Logic Level Low	V_{OL}	—	—	0.1 x V_{DD}	V	6 mA, DSC1004, C_L = 40 pF	
		—	—	0.2 x V_{DD}		6 mA, DSC1003, C_L = 25 pF	
		—	—	0.2 x V_{DD}		4 mA, DSC1001, C_L = 15 pF	
Output Transition Rise Time	t_R	—	1.0	2.0	ns	DSC1001, C_L = 15 pF	T = +25°C, 20% to 80%
		—	1.1	2.0		DSC1003, C_L = 25 pF	
		—	1.2	2.0		DSC1004, C_2 = 40 pF	
Output Transition Fall Time	t_F	—	0.9	2.0	ns	DSC1001, C_L = 15 pF	T = +25°C, 20% to 80%
		—	1.0	2.0		DSC1003, C_L = 25 pF	
		—	1.1	2.0		DSC1004, C_2 = 40 pF	

Note 1: t_{SU} is time to stable output frequency after V_{DD} is applied. t_{SU} and t_{EN} (after EN is asserted) are identical values.

2: Measured over 50k clock cycles.

© 2017 Microchip Technology Inc.

TABLE 1-1: DC CHARACTERISTICS (CONTINUED)

Electrical Characteristics: V_{DD} = 1.8 to 3.3V; T_A = +85°C unless otherwise specified.

Parameters	Sym.	Min.	Typ.	Max.	Units	Conditions	
Jitter, Max. Cycle-to-Cycle	J_{CC}	—	50	—	ps	f = 100 MHz (Note 2)	
Period Jitter	J_P	—	5	10	ps_{RMS}	f = 100 MHz (Note 2)	
V_{DD} = 3.3V							
Supply Current, No Load	I_{DD}	—	6.0	6.5	mA	1 MHz	C_L = 0 pF, R_L = ∞, T = +25°C
		—	6.8	8.0		27 MHz	
		—	8.2	10.5		70 MHz	
		—	10.8	16.6		150 MHz	
Output Logic Level High	V_{OH}	0.9 x V_{DD}	—	—	V	–8 mA, DSC1004, C_L = 40 pF	
		0.9 x V_{DD}	—	—		–6 mA, DSC1003, C_L = 25 pF	
		0.8 x V_{DD}	—	—		–4 mA, DSC1001, C_L = 15 pF	
Output Logic Level Low	V_{OL}	—	—	0.1 x V_{DD}	V	8 mA, DSC1004, C_L = 40 pF	
		—	—	0.1 x V_{DD}		6 mA, DSC1003, C_L = 25 pF	
		—	—	0.2 x V_{DD}		4 mA, DSC1001, C_L = 15 pF	
Output Transition Rise Time	t_R	—	1.0	2.0	ns	DSC1001, C_L = 15 pF	T = +25°C, 20% to 80%
		—	1.1	2.0		DSC1003, C_L = 25 pF	
		—	1.2	2.0		DSC1004, C_2 = 40 pF	
Output Transition Fall Time	t_F	—	0.9	2.0	ns	DSC1001, C_L = 15 pF	T = +25°C, 20% to 80%
		—	1.0	2.0		DSC1003, C_L = 25 pF	
		—	1.1	2.0		DSC1004, C_2 = 40 pF	
Jitter, Max. Cycle-to-Cycle	J_{CC}	—	50	—	ps	f = 100 MHz (Note 2)	
Period Jitter	J_P	—	5	10	ps_{RMS}	f = 100 MHz (Note 2)	

Note 1: t_{SU} is time to stable output frequency after V_{DD} is applied. t_{SU} and t_{EN} (after EN is asserted) are identical values.

2: Measured over 50k clock cycles.

TEMPERATURE SPECIFICATIONS (Note 1)

Parameters	Sym.	Min.	Typ.	Max.	Units	Conditions
Temperature Ranges						
Operating Temperature Range (T)	T_A	–40	—	+105	°C	Ordering Option L
		–40	—	+85	°C	Ordering Option I
		–20	—	+70	°C	Ordering Option E
Junction Operating Temperature	T_J	—	—	+150	°C	—
Storage Temperature Range	T_A	–55	—	+150	°C	—
Soldering Temperature Range	T_S	—	—	+260	°C	40 sec. max

Note 1: The maximum allowable power dissipation is a function of ambient temperature, the maximum allowable junction temperature and the thermal resistance from junction to air (i.e., T_A, T_J, θ_{JA}). Exceeding the maximum allowable power dissipation will cause the device operating junction temperature to exceed the maximum +150°C rating. Sustained junction temperatures above +150°C can impact the device reliability.

© 2017 Microchip Technology Inc.

2.0 PIN DESCRIPTIONS

The descriptions of the pins are listed in Table 2-1 and Table 2-2.

TABLE 2-1: CDFN PACKAGE PIN FUNCTION TABLE

Pin Number	Symbol	Description
1	STANDBY#	Standby input (**Section 4.1 “Standby Function”**)
2	GND	Power supply ground
3	OUT	Oscillator output
4	VDD	Positive power supply

TABLE 2-2: DFN PACKAGE PIN FUNCTION TABLE

Pin Number	Symbol	Description
1	STANDBY#	Standby input (**Section 4.1 “Standby Function”**)
2	GND	Power supply ground
3	OUT	Oscillator output
4	VDD	Positive power supply
Center Pad	NC	Tie to GND or do not connect.

3.0 NOMINAL PERFORMANCE CHARACTERISTICS

Note: The graphs and tables provided following this note are a statistical summary based on a limited number of samples and are provided for informational purposes only. The performance characteristics listed herein are not tested or guaranteed. In some graphs or tables, the data presented may be outside the specified operating range (e.g., outside specified power supply range) and therefore outside the warranted range.

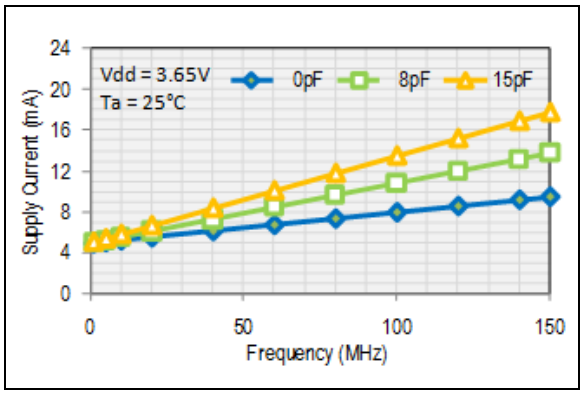

FIGURE 3-1: *Supply Current.*

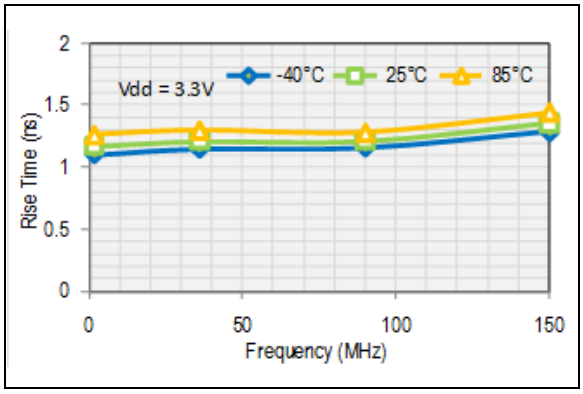

FIGURE 3-2: *Rise Time.*

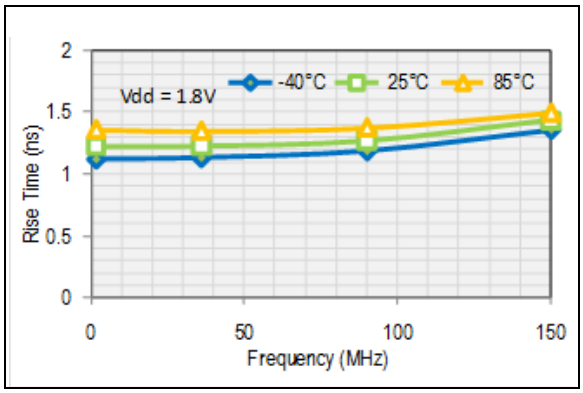

FIGURE 3-3: *Rise Time.*

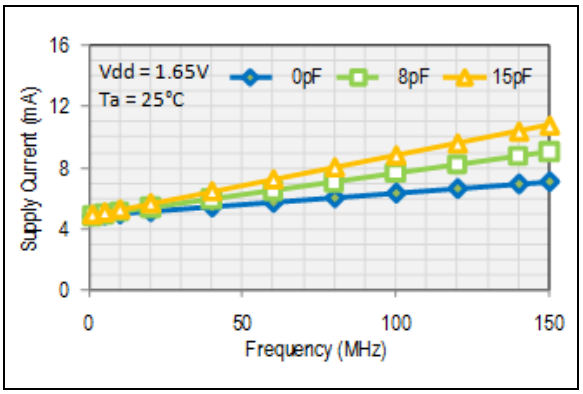

FIGURE 3-4: *Supply Current.*

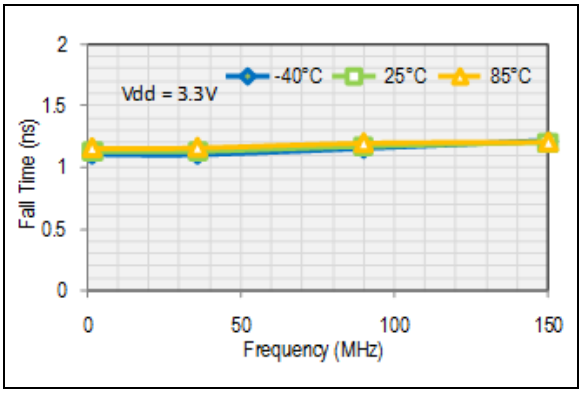

FIGURE 3-5: *Fall Time.*

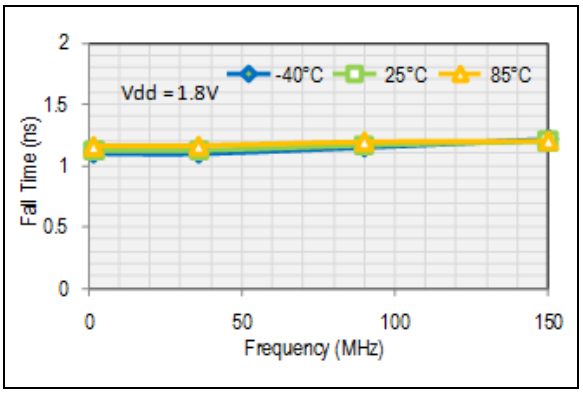

FIGURE 3-6: *Fall Time.*

© 2017 Microchip Technology Inc.

4.0 OUTPUT WAVEFORM

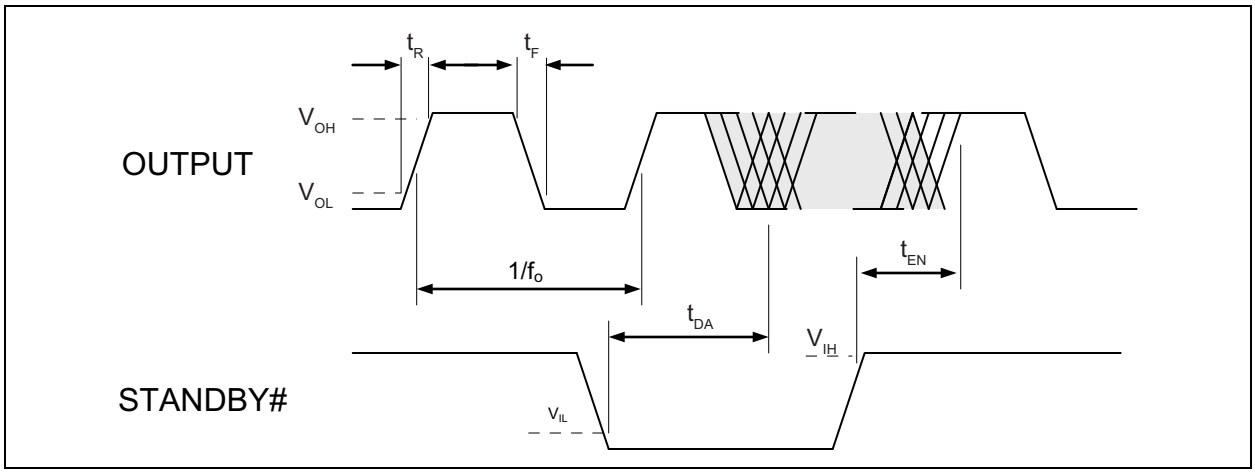

FIGURE 4-1: *Output Waveform.*

4.1 Standby Function

Standby# (Pin 1)	Output (Pin 3)
High Level	Output ON
Open (no connect)	Output ON
Low Level	High Impedance

5.0 TEST CIRCUIT

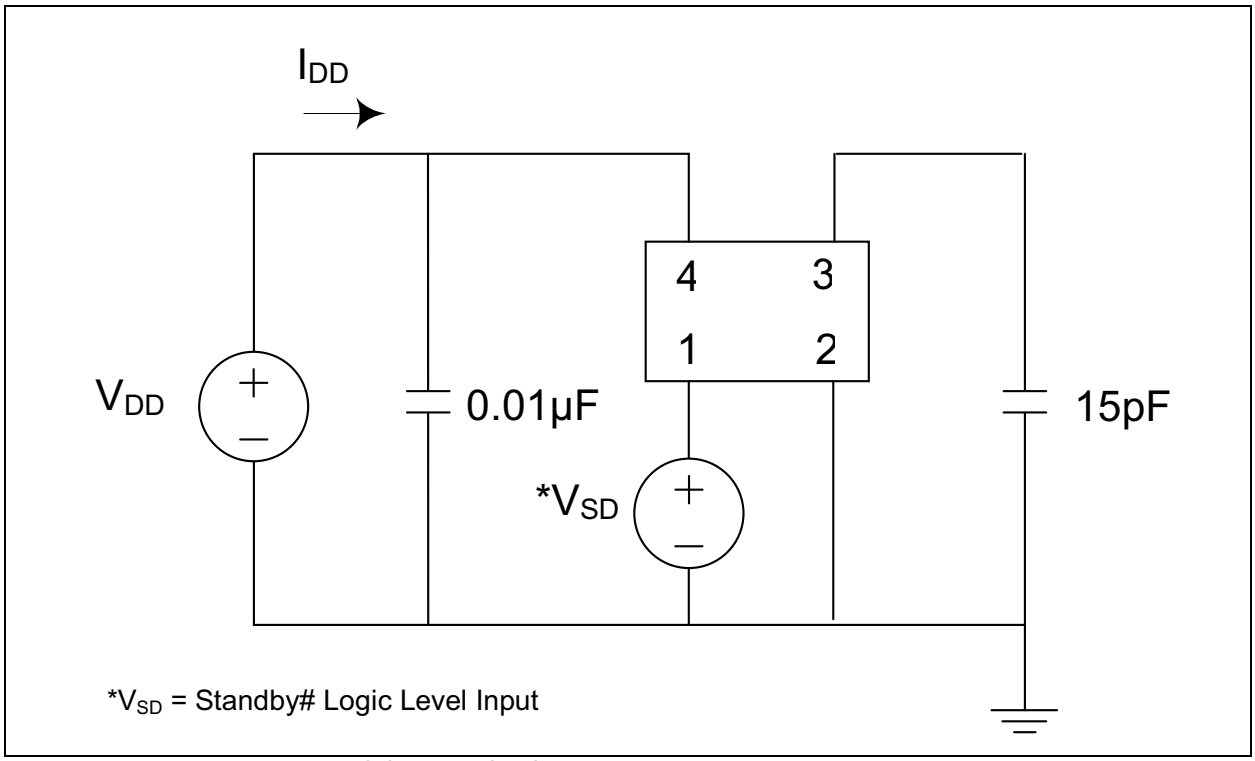

FIGURE 5-1: *DSC1001/3/4 Test Circuit.*

© 2017 Microchip Technology Inc.

6.0 BOARD LAYOUT (RECOMMENDED)

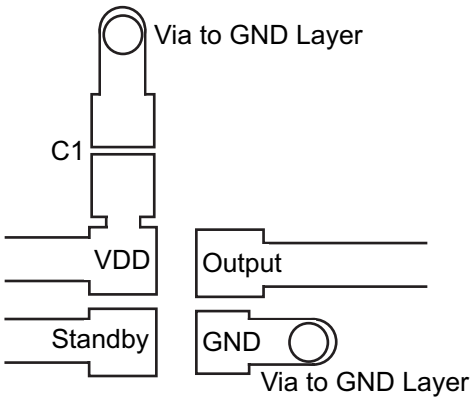

FIGURE 6-1: *Recommended Board Layout for DSC1001/3/4.*

7.0 SOLDER REFLOW PROFILE

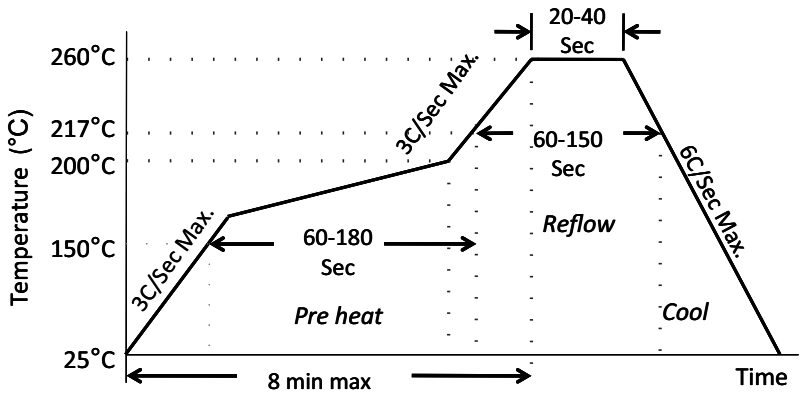

FIGURE 7-1: *Solder Reflow Profile.*

MSL 1 @ 260°C refer to JSTD-020C	
Ramp-Up Rate (200°C to Peak Temp)	3°C/sec. max.
Preheat Time 150°C to 200°C	60 to 180 sec.
Time maintained above 217°C	60 to 150 sec.
Peak Temperature	255°C to 260°C
Time within 5°C of Actual Peak	20 to 40 sec.
Ramp-Down Rate	6°C/sec. max.
Time 25°C to Peak Temperature	8 minutes max.

© 2017 Microchip Technology Inc.

8.0 PACKAGING INFORMATION

8.1 Package Marking Information

4-Lead CDFN/DFN*	Example
XXXXXX DCPYYWW 0SSS ●	0400000 DCP1121 0603 ●

Legend:	XX...X	Product code, customer-specific information, or frequency in MHz without printed decimal point
	Y	Year code (last digit of calendar year)
	YY	Year code (last 2 digits of calendar year)
	WW	Week code (week of January 1 is week ‘01’)
	NNN	Alphanumeric traceability code
	(e3)	Pb-free JEDEC® designator for Matte Tin (Sn)
	*	This package is Pb-free. The Pb-free JEDEC designator ((e3)) can be found on the outer packaging for this package.
	●, ▲, ▼	Pin one index is identified by a dot, delta up, or delta down (triangle mark).

Note: In the event the full Microchip part number cannot be marked on one line, it will be carried over to the next line, thus limiting the number of available characters for customer-specific information. Package may or may not include the corporate logo.

Underbar (_) and/or Overbar (¯) symbol may not be to scale.

4-Lead DFN 7.0 mm x 5.0 mm Package Outline & Recommended Land Pattern

TITLE
4 LEAD DFN 7.0x5.0mm PACKAGE OUTLINE & RECOMMENDED LAND PATTERN

DRAWING #	DFN75-4LD-PL-1	UNIT	MM

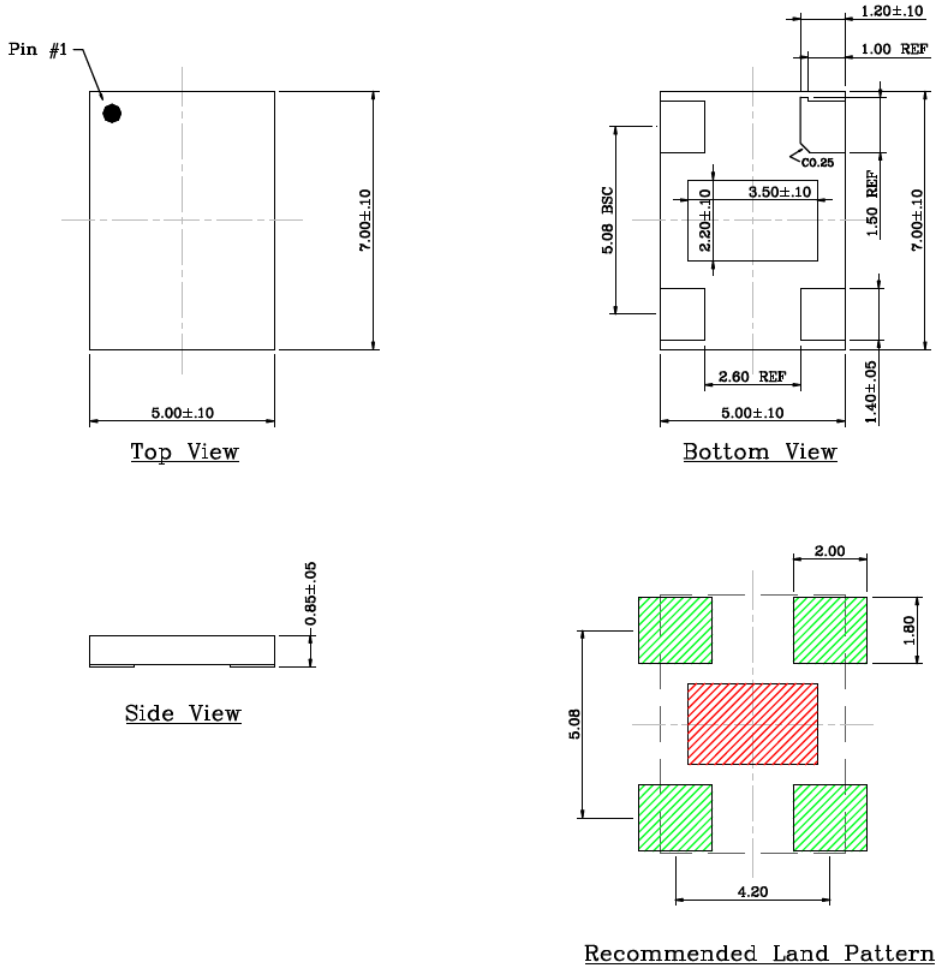

NOTE:
1. Green shaded rectangles in Recommended Land Pattern are solder stencil opening.
2. Red shaded rectangle in Recommended Land Pattern is keep out area.

Note: For the most current package drawings, please see the Microchip Packaging Specification located at http://www.microchip.com/packaging.

© 2017 Microchip Technology Inc.

4-Lead CDFN 5.0 mm x 3.2 mm Package Outline & Recommended Land Pattern

TITLE
4 LEAD CDFN 5.0x3.2mm COL PACKAGE OUTLINE & RECOMMENDED LAND PATTERN

DRAWING #	CDFN5032-4LD-PL-1	UNIT	MM

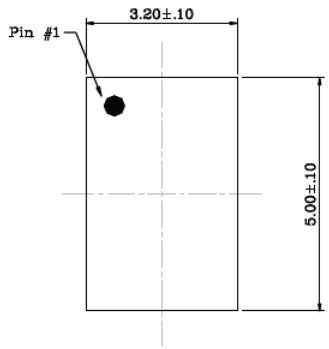

Top View

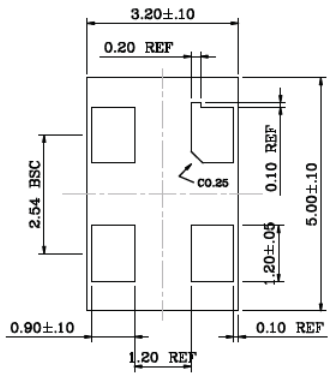

Bottom View

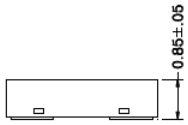

Side View

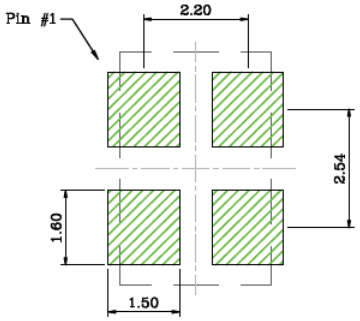

Recommended Land Pattern

NOTE:
1. Green shaded rectangles in Recommended Land Pattern are solder stencil opening.

Note: For the most current package drawings, please see the Microchip Packaging Specification located at http://www.microchip.com/packaging.

4-Lead CDFN 3.2 mm x 2.5 mm Package Outline & Recommended Land Pattern

TITLE
4 LEAD CDFN 3.2x2.5mm COL PACKAGE OUTLINE & RECOMMENDED LAND PATTERN

DRAWING #	CDFN3225-4LD-PL-1	UNIT	MM

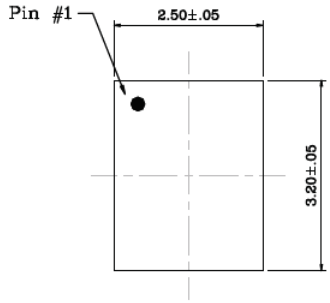

Top View

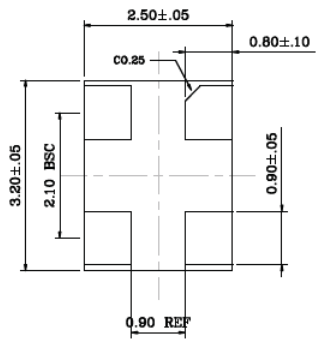

Bottom View

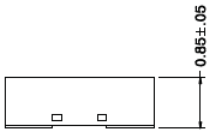

Side View

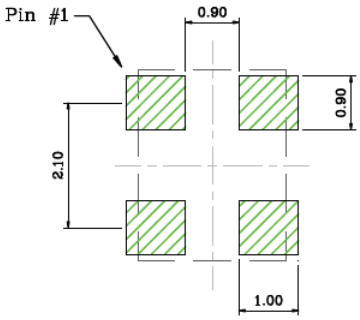

Recommended Land Pattern

NOTE:
1. Green shaded rectangles in Recommended Land Pattern are solder stencil opening.

Note: For the most current package drawings, please see the Microchip Packaging Specification located at http://www.microchip.com/packaging.

© 2017 Microchip Technology Inc.

4-Lead CDFN 2.5 mm x 2.0 mm Package Outline & Recommended Land Pattern

TITLE
4 LEAD CDFN 2.5x2.0mm COL PACKAGE OUTLINE & RECOMMENDED LAND PATTERN

DRAWING #	CDFN2520-4LD-PL-1	UNIT	MM

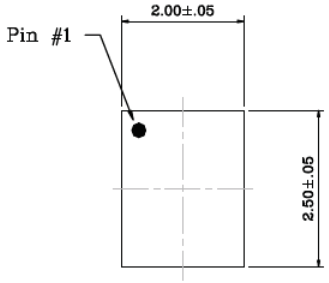

Top View

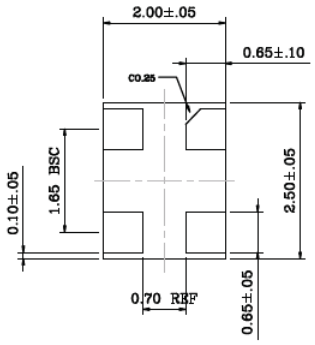

Bottom View

Side View

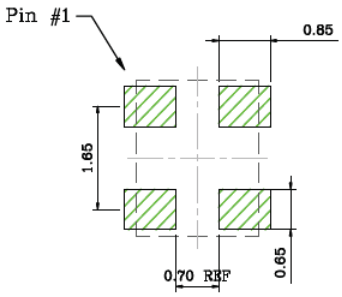

Recommended Land Pattern

NOTE:
1. Green shaded rectangles in Recommended Land Pattern are solder stencil opening.

Note: For the most current package drawings, please see the Microchip Packaging Specification located at http://www.microchip.com/packaging.

NOTES:

© 2017 Microchip Technology Inc.

APPENDIX A: REVISION HISTORY

Revision A (September 2017)

- Converted Micrel data sheet DSC1001 to Microchip format data sheet DS20005529A.
- Minor text changes throughout.
- Added Table 2-2 for DFN package.
- Combined Micrel data sheet DSC1003 and DSC1004 into this data sheet.
  - Updated **Section 1.0 "Electrical Characteristics"** to reflect this change.
  - Updated General Description and Features to reflect this change.

Revision B (November 2017)

- Updated V_{OH} and V_{OL} values in Table 1-1.

NOTES:

© 2017 Microchip Technology Inc.

PRODUCT IDENTIFICATION SYSTEM

To order or obtain information, e.g., on pricing or delivery, contact your local Microchip representative or sales office.

PART NO.	X	X	X	-XXX.XXXX	X
Device	Package	Temperature Range	Stability	Frequency	Package

Device:	DSC1001/3/4: 1.8V - 3.3V Low-Power Precision CMOS Oscillator		
Package:	A	=	4-Lead 7.0 mm x 5.0 mm DFN
	B	=	4-Lead 5.0 mm x 3.2 mm CDFN
	C	=	4-Lead 3.2 mm x 2.5 mm CDFN
	D	=	4-Lead 2.5 mm x 2.0 mm CDFN
Temperature Range:	E	=	–20°C to +70°C (Extended Commercial)
	I	=	–40°C to +85°C (Industrial)
	L	=	–40°C to +105°C (Extended Industrial)
Stability:	1	=	±50ppm
	2	=	±25ppm
	3	=	±20 ppm
	5	=	±10 ppm
Frequency:	xxx.xxxx	=	1 MHz to 150 MHz (user-defined)
Packing Option:	<blank>	=	110/Tube
	T	=	1,000/Reel

Examples:

a) DSC1001AE1-010.0000T:
1.8V - 3.3V Low-Power Precision CMOS Oscillator, 4-Lead 7.0 mm x 5.0 mm DFN, Ext. Commercial Temperature Range, ±50 ppm, 10 MHz Output Frequency, 1,000/Reel

b) DSC1003BL2-030.0000:
1.8V - 3.3V Low-Power Precision CMOS Oscillator, 4-Lead 5.0 mm x 3.2 mm CDFN, Ext. Industrial Temperature Range, ±25 ppm, 30 MHz Output Frequency, 110/Tube

c) DSC1001DE5-150.0000:
1.8V - 3.3V Low-Power Precision CMOS Oscillator, 4-Lead 2.5 mm x 2.0 mm CDFN, Ext. Commercial Temperature Range, ±10 ppm, 150 MHz Output Frequency, 110/Tube

d) DSC1004AI3-075.0000T:
1.8V - 3.3V Low-Power Precision CMOS Oscillator, 4-Lead 7.0 mm x 5.0 mm DFN, Industrial Temperature Range, ±20 ppm, 75 MHz Output Frequency, 1,000/Reel

Note 1: Tape and Reel identifier only appears in the catalog part number description. This identifier is used for ordering purposes and is not printed on the device package. Check with your Microchip Sales Office for package availability with the Tape and Reel option.

NOTES:

© 2017 Microchip Technology Inc.

Note the following details of the code protection feature on Microchip devices:

- Microchip products meet the specification contained in their particular Microchip Data Sheet.
- Microchip believes that its family of products is one of the most secure families of its kind on the market today, when used in the intended manner and under normal conditions.
- There are dishonest and possibly illegal methods used to breach the code protection feature. All of these methods, to our knowledge, require using the Microchip products in a manner outside the operating specifications contained in Microchip's Data Sheets. Most likely, the person doing so is engaged in theft of intellectual property.
- Microchip is willing to work with the customer who is concerned about the integrity of their code.
- Neither Microchip nor any other semiconductor manufacturer can guarantee the security of their code. Code protection does not mean that we are guaranteeing the product as "unbreakable."

Code protection is constantly evolving. We at Microchip are committed to continuously improving the code protection features of our products. Attempts to break Microchip's code protection feature may be a violation of the Digital Millennium Copyright Act. If such acts allow unauthorized access to your software or other copyrighted work, you may have a right to sue for relief under that Act.

Information contained in this publication regarding device applications and the like is provided only for your convenience and may be superseded by updates. It is your responsibility to ensure that your application meets with your specifications. MICROCHIP MAKES NO REPRESENTATIONS OR WARRANTIES OF ANY KIND WHETHER EXPRESS OR IMPLIED, WRITTEN OR ORAL, STATUTORY OR OTHERWISE, RELATED TO THE INFORMATION, INCLUDING BUT NOT LIMITED TO ITS CONDITION, QUALITY, PERFORMANCE, MERCHANTABILITY OR FITNESS FOR PURPOSE**.** Microchip disclaims all liability arising from this information and its use. Use of Microchip devices in life support and/or safety applications is entirely at the buyer's risk, and the buyer agrees to defend, indemnify and hold harmless Microchip from any and all damages, claims, suits, or expenses resulting from such use. No licenses are conveyed, implicitly or otherwise, under any Microchip intellectual property rights unless otherwise stated.

Microchip received ISO/TS-16949:2009 certification for its worldwide headquarters, design and wafer fabrication facilities in Chandler and Tempe, Arizona; Gresham, Oregon and design centers in California and India. The Company's quality system processes and procedures are for its PIC® MCUs and dsPIC® DSCs, KEELOQ® code hopping devices, Serial EEPROMs, microperipherals, nonvolatile memory and analog products. In addition, Microchip's quality system for the design and manufacture of development systems is ISO 9001:2000 certified.

QUALITY MANAGEMENT SYSTEM
CERTIFIED BY DNV
= ISO/TS 16949 =

Trademarks

The Microchip name and logo, the Microchip logo, AnyRate, AVR, AVR logo, AVR Freaks, BeaconThings, BitCloud, CryptoMemory, CryptoRF, dsPIC, FlashFlex, flexPWR, Heldo, JukeBlox, KEELOQ, KEELOQ logo, Kleer, LANCheck, LINK MD, maXStylus, maXTouch, MediaLB, megaAVR, MOST, MOST logo, MPLAB, OptoLyzer, PIC, picoPower, PICSTART, PIC32 logo, Prochip Designer, QTouch, RightTouch, SAM-BA, SpyNIC, SST, SST Logo, SuperFlash, tinyAVR, UNI/O, and XMEGA are registered trademarks of Microchip Technology Incorporated in the U.S.A. and other countries.

ClockWorks, The Embedded Control Solutions Company, EtherSynch, Hyper Speed Control, HyperLight Load, IntelliMOS, mTouch, Precision Edge, and Quiet-Wire are registered trademarks of Microchip Technology Incorporated in the U.S.A.

Adjacent Key Suppression, AKS, Analog-for-the-Digital Age, Any Capacitor, AnyIn, AnyOut, BodyCom, chipKIT, chipKIT logo, CodeGuard, CryptoAuthentication, CryptoCompanion, CryptoController, dsPICDEM, dsPICDEM.net, Dynamic Average Matching, DAM, ECAN, EtherGREEN, In-Circuit Serial Programming, ICSP, Inter-Chip Connectivity, JitterBlocker, KleerNet, KleerNet logo, Mindi, MiWi, motorBench, MPASM, MPF, MPLAB Certified logo, MPLIB, MPLINK, MultiTRAK, NetDetach, Omniscient Code Generation, PICDEM, PICDEM.net, PICkit, PICtail, PureSilicon, QMatrix, RightTouch logo, REAL ICE, Ripple Blocker, SAM-ICE, Serial Quad I/O, SMART-I.S., SQI, SuperSwitcher, SuperSwitcher II, Total Endurance, TSHARC, USBCheck, VariSense, ViewSpan, WiperLock, Wireless DNA, and ZENA are trademarks of Microchip Technology Incorporated in the U.S.A. and other countries.

SQTP is a service mark of Microchip Technology Incorporated in the U.S.A.

Silicon Storage Technology is a registered trademark of Microchip Technology Inc. in other countries.

GestIC is a registered trademark of Microchip Technology Germany II GmbH & Co. KG, a subsidiary of Microchip Technology Inc., in other countries.

All other trademarks mentioned herein are property of their respective companies.

© 2017, Microchip Technology Incorporated, All Rights Reserved.

ISBN: 978-1-5224-2389-8

Worldwide Sales and Service

AMERICAS

Corporate Office
2355 West Chandler Blvd.
Chandler, AZ 85224-6199
Tel: 480-792-7200
Fax: 480-792-7277
Technical Support:
http://www.microchip.com/support
Web Address:
www.microchip.com

Atlanta
Duluth, GA
Tel: 678-957-9614
Fax: 678-957-1455

Austin, TX
Tel: 512-257-3370

Boston
Westborough, MA
Tel: 774-760-0087
Fax: 774-760-0088

Chicago
Itasca, IL
Tel: 630-285-0071
Fax: 630-285-0075

Dallas
Addison, TX
Tel: 972-818-7423
Fax: 972-818-2924

Detroit
Novi, MI
Tel: 248-848-4000

Houston, TX
Tel: 281-894-5983

Indianapolis
Noblesville, IN
Tel: 317-773-8323
Fax: 317-773-5453
Tel: 317-536-2380

Los Angeles
Mission Viejo, CA
Tel: 949-462-9523
Fax: 949-462-9608
Tel: 951-273-7800

Raleigh, NC
Tel: 919-844-7510

New York, NY
Tel: 631-435-6000

San Jose, CA
Tel: 408-735-9110
Tel: 408-436-4270

Canada - Toronto
Tel: 905-695-1980
Fax: 905-695-2078

ASIA/PACIFIC

Australia - Sydney
Tel: 61-2-9868-6733

China - Beijing
Tel: 86-10-8569-7000

China - Chengdu
Tel: 86-28-8665-5511

China - Chongqing
Tel: 86-23-8980-9588

China - Dongguan
Tel: 86-769-8702-9880

China - Guangzhou
Tel: 86-20-8755-8029

China - Hangzhou
Tel: 86-571-8792-8115

China - Hong Kong SAR
Tel: 852-2943-5100

China - Nanjing
Tel: 86-25-8473-2460

China - Qingdao
Tel: 86-532-8502-7355

China - Shanghai
Tel: 86-21-3326-8000

China - Shenyang
Tel: 86-24-2334-2829

China - Shenzhen
Tel: 86-755-8864-2200

China - Suzhou
Tel: 86-186-6233-1526

China - Wuhan
Tel: 86-27-5980-5300

China - Xian
Tel: 86-29-8833-7252

China - Xiamen
Tel: 86-592-2388138

China - Zhuhai
Tel: 86-756-3210040

ASIA/PACIFIC

India - Bangalore
Tel: 91-80-3090-4444

India - New Delhi
Tel: 91-11-4160-8631

India - Pune
Tel: 91-20-4121-0141

Japan - Osaka
Tel: 81-6-6152-7160

Japan - Tokyo
Tel: 81-3-6880- 3770

Korea - Daegu
Tel: 82-53-744-4301

Korea - Seoul
Tel: 82-2-554-7200

Malaysia - Kuala Lumpur
Tel: 60-3-7651-7906

Malaysia - Penang
Tel: 60-4-227-8870

Philippines - Manila
Tel: 63-2-634-9065

Singapore
Tel: 65-6334-8870

Taiwan - Hsin Chu
Tel: 886-3-577-8366

Taiwan - Kaohsiung
Tel: 886-7-213-7830

Taiwan - Taipei
Tel: 886-2-2508-8600

Thailand - Bangkok
Tel: 66-2-694-1351

Vietnam - Ho Chi Minh
Tel: 84-28-5448-2100

EUROPE

Austria - Wels
Tel: 43-7242-2244-39
Fax: 43-7242-2244-393

Denmark - Copenhagen
Tel: 45-4450-2828
Fax: 45-4485-2829

Finland - Espoo
Tel: 358-9-4520-820

France - Paris
Tel: 33-1-69-53-63-20
Fax: 33-1-69-30-90-79

Germany - Garching
Tel: 49-8931-9700

Germany - Haan
Tel: 49-2129-3766400

Germany - Heilbronn
Tel: 49-7131-67-3636

Germany - Karlsruhe
Tel: 49-721-625370

Germany - Munich
Tel: 49-89-627-144-0
Fax: 49-89-627-144-44

Germany - Rosenheim
Tel: 49-8031-354-560

Israel - Ra'anana
Tel: 972-9-744-7705

Italy - Milan
Tel: 39-0331-742611
Fax: 39-0331-466781

Italy - Padova
Tel: 39-049-7625286

Netherlands - Drunen
Tel: 31-416-690399
Fax: 31-416-690340

Norway - Trondheim
Tel: 47-7289-7561

Poland - Warsaw
Tel: 48-22-3325737

Romania - Bucharest
Tel: 40-21-407-87-50

Spain - Madrid
Tel: 34-91-708-08-90
Fax: 34-91-708-08-91

Sweden - Gothenberg
Tel: 46-31-704-60-40

Sweden - Stockholm
Tel: 46-8-5090-4654

UK - Wokingham
Tel: 44-118-921-5800
Fax: 44-118-921-5820

© 2017 Microchip Technology Inc.

Mouser Electronics

Authorized Distributor

Click to View Pricing, Inventory, Delivery & Lifecycle Information:

Microchip:

DSC1004AE2-010.0000T DSC1004CI5-125.0000T DSC1004DC1-050.0000 DSC1004DC1-026.0000T DSC1004AI5-125.0000T DSC1004DC1-100.0000 DSC1004DC1-020.0000T DSC1004DI2-072.0000T DSC1004DI5-010.0000T DSC1004AI1-050.0000T DSC1004DC1-026.0000 DSC1004DC1-050.0000T DSC1004CI5-050.0000T DSC1004AI1-048.0000T DSC1004AI2-081.8180 DSC1004AI1-025.0000T DSC1004DI2-025.0000 DSC1004AI2-040.0000T DSC1004DC1-020.0000 DSC1001AL1-026.0000T DSC1001BI5-100.0000T DSC1001BI1-001.8432T DSC1001BI1-060.0000T DSC1001CI2-073.7280T DSC1001CL1-008.0000T DSC1001DL5-012.2880T DSC1001DL5-048.0000T DSC1001DL5-020.0000T DSC1001DL5-100.0000T DSC1001DL5-133.3330T DSC1001DI5-012.2880T DSC1001DI5-020.0000T DSC1001DL5-010.0000T DSC1001DL5-050.0000T DSC1001DL5-125.0000T DSC1001DI5-050.0000T DSC1001DI2-029.5000T DSC1001DI2-038.4000 DSC1001DI5-029.4912T DSC1001DI2-108.0000T DSC1001DI2-125.0000T DSC1001DI5-010.0000T DSC1001DI1-009.8304T DSC1001DI1-024.5760T DSC1001DI1-026.0000T DSC1001DI1-060.0000 DSC1001DI1-100.0000T DSC1001DI2-018.0000 DSC1001CL2-033.3000T DSC1001CL5-012.0000T DSC1001CL5-024.5760T DSC1001CL5-125.0000T DSC1001DE1-054.0000T DSC1001DI1-008.0000T DSC1001CI5-016.0000T DSC1001CI5-018.4320T DSC1001CI5-019.2000T DSC1001CI5-125.0000T DSC1001CL2-012.0000 DSC1001CL2-027.0000T DSC1001CI1-024.0000 DSC1001CI1-024.0000T DSC1001CI2-038.8800T DSC1001CI2-054.0000T DSC1001CI2-065.5500T DSC1001CI2-083.2500T DSC1001CE1-004.8000T DSC1001CE1-012.2880T DSC1001CE1-020.8300T DSC1001CE2-024.0000T DSC1001CE2-033.0000T DSC1001CE2-037.1250T DSC1001AI5-048.0000T DSC1001DI2-048.0000T DSC1001DI5-002.4576 DSC1001DI5-004.0000T DSC1001DI5-008.1920T DSC1001DL2-030.0000T DSC1001AI2-013.5000T DSC1001AI2-015.0000T DSC1001AI2-027.1200T DSC1001AI2-032.7680T DSC1001AI2-098.3040T DSC1001AI5-025.0000T DSC1001BL5-012.0000T DSC1001AC2-025.0000T DSC1001AE2-024.0000T DSC1001AE2-054.0000T DSC1001AI1-025.0000T DSC1001AI2-006.0000T DSC1001BI2-001.8432T DSC1001BI2-020.0000T DSC1001BI2-040.0000T DSC1001BI2-044.0000T DSC1001BI2-054.0000T DSC1001BI5-040.0000T DSC1001BE1-048.0000T DSC1001BE2-012.0000 DSC1001BI1-010.0000T DSC1001BI1-014.7456T