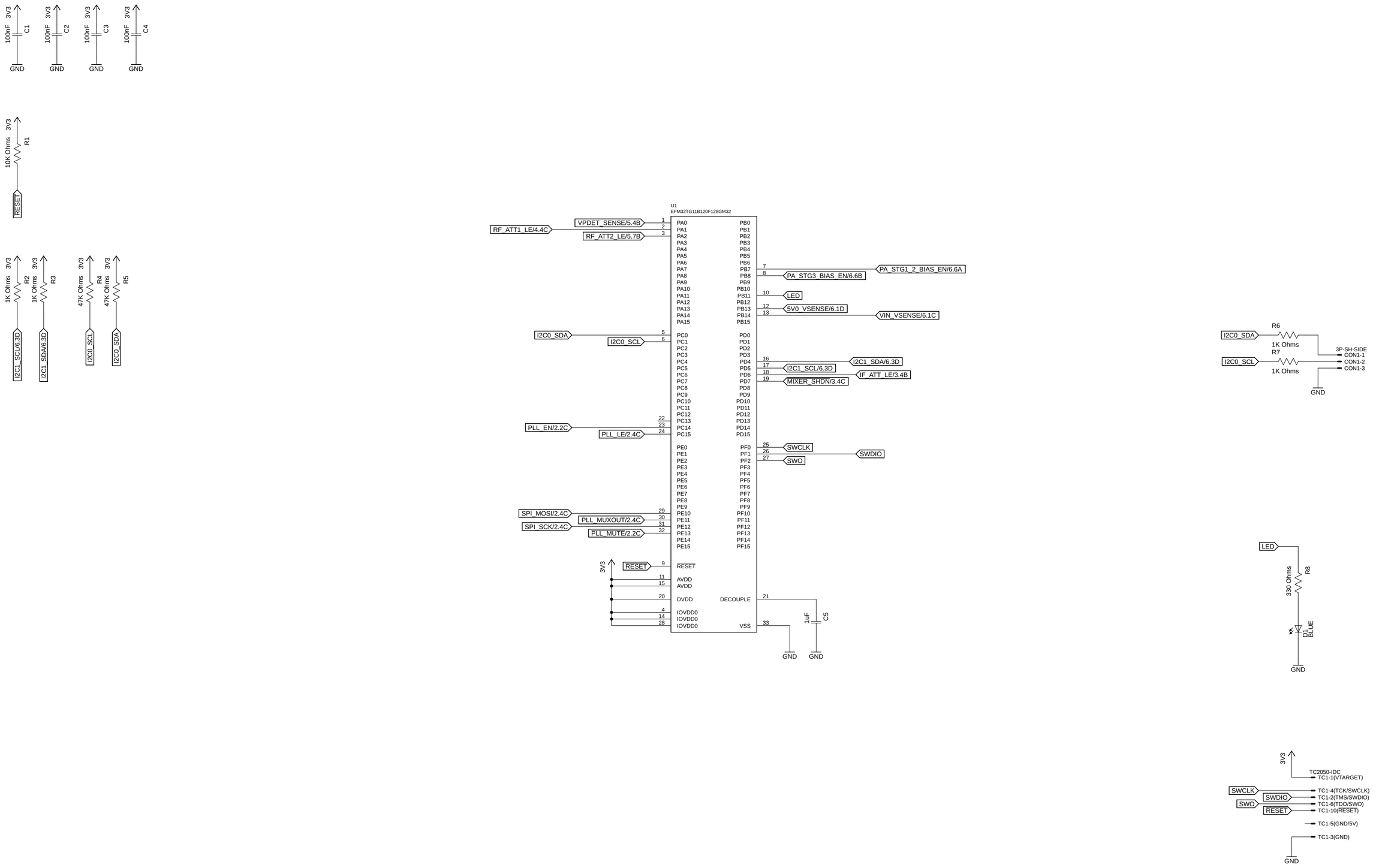

qo-100-upconverter	João Silva Logo
Joao Silva	
Sheet: 1/6	MCU
Date: 10/03/21 22:37	Rev: 2

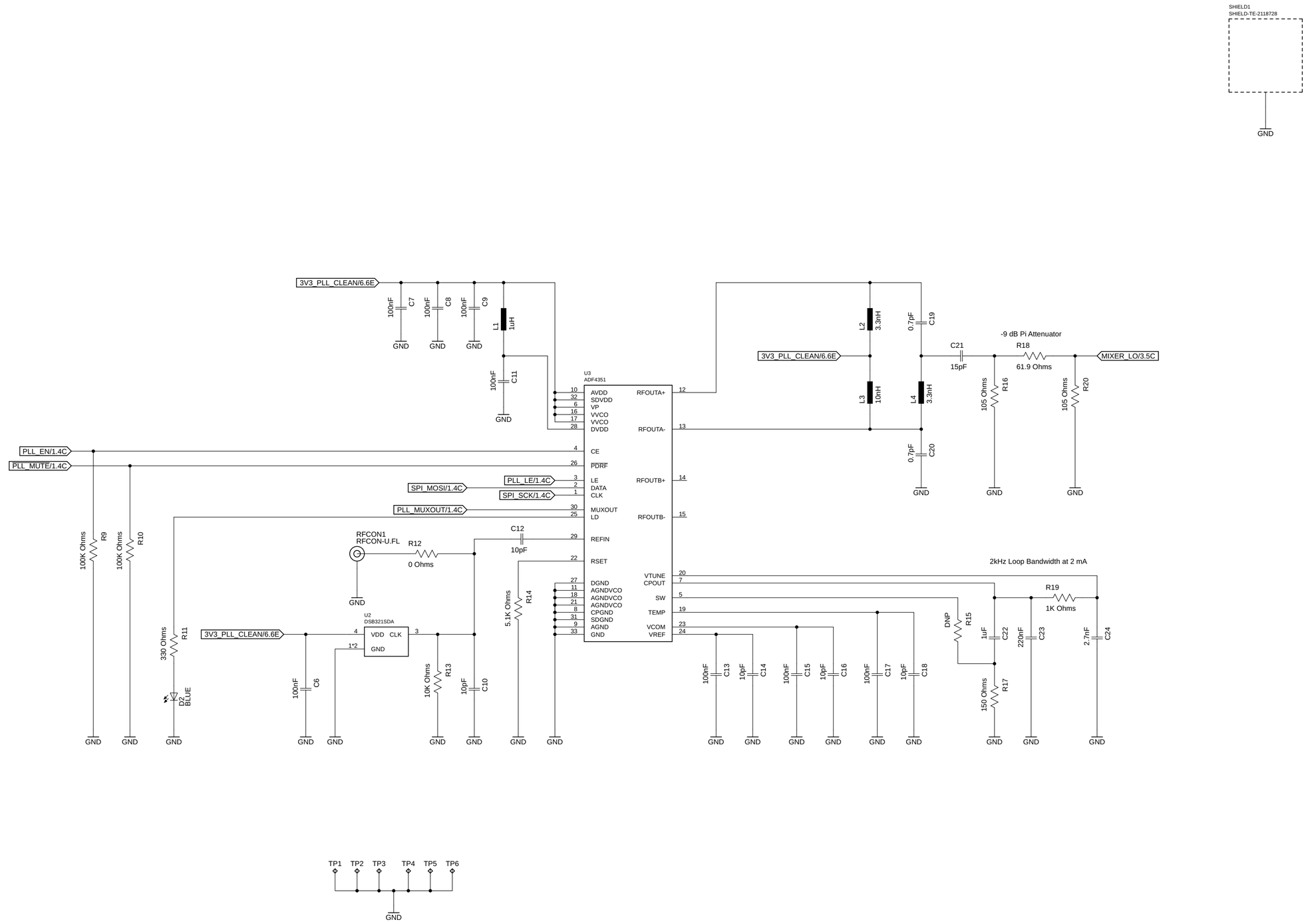

qo-100-upconverter	
Joao Silva	
Sheet: 2/6	LO Synthesizer
Date: 10/03/21 22:37	Rev: 2

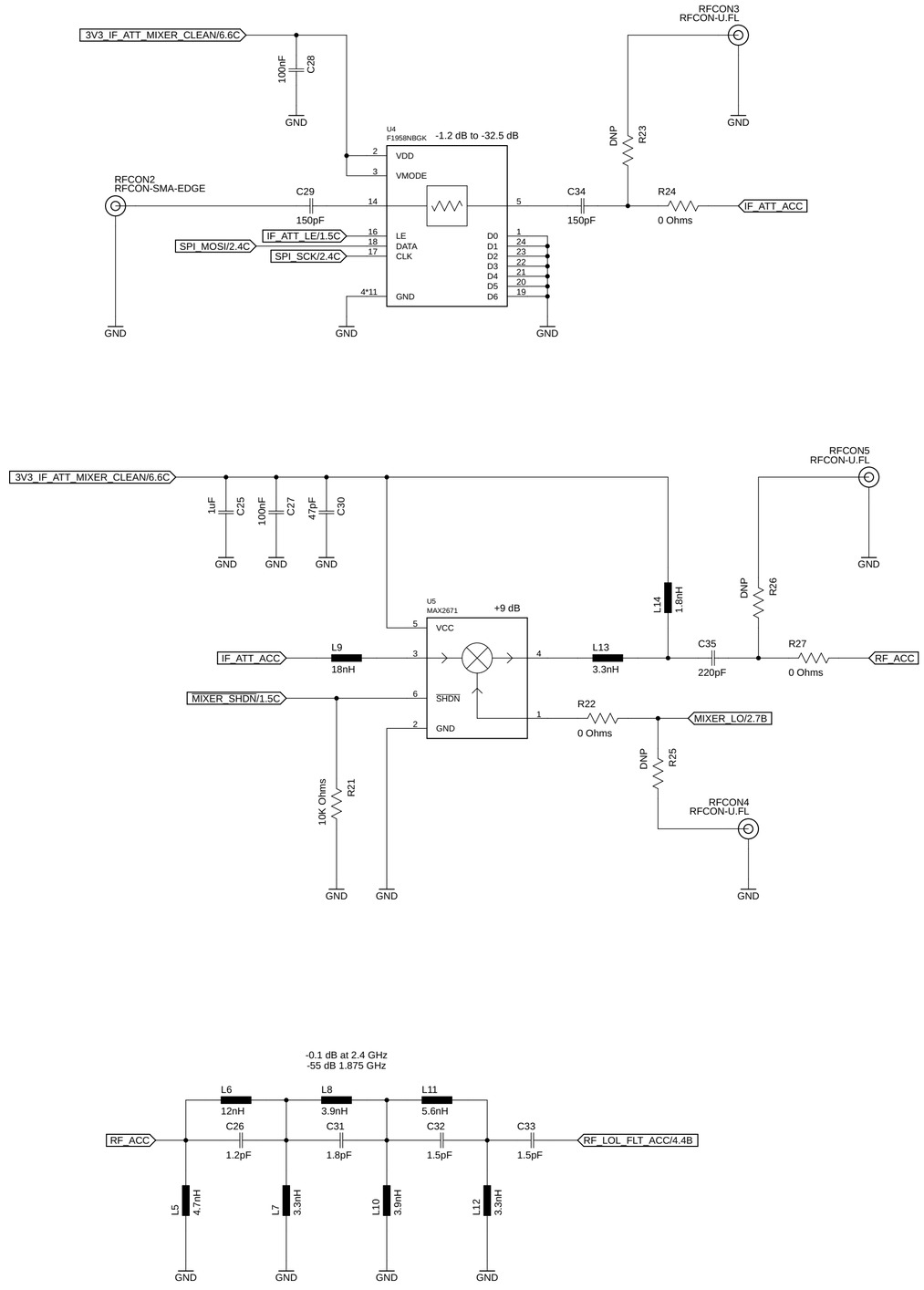

qo-100-upconverter	
Joao Silva	
Sheet: 3/6	IF + Mixer + LOL Filter
Date: 10/03/21 22:37	Rev: 2

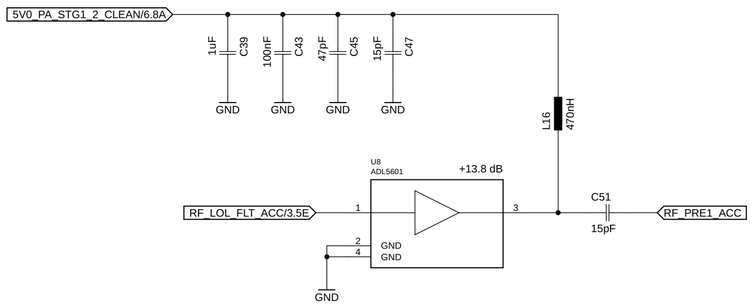

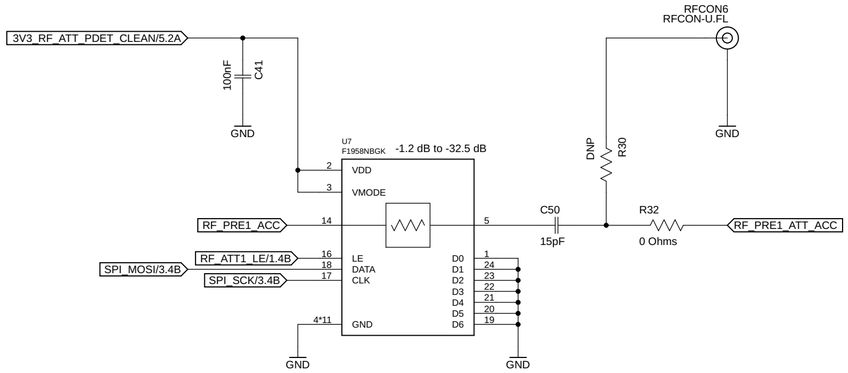

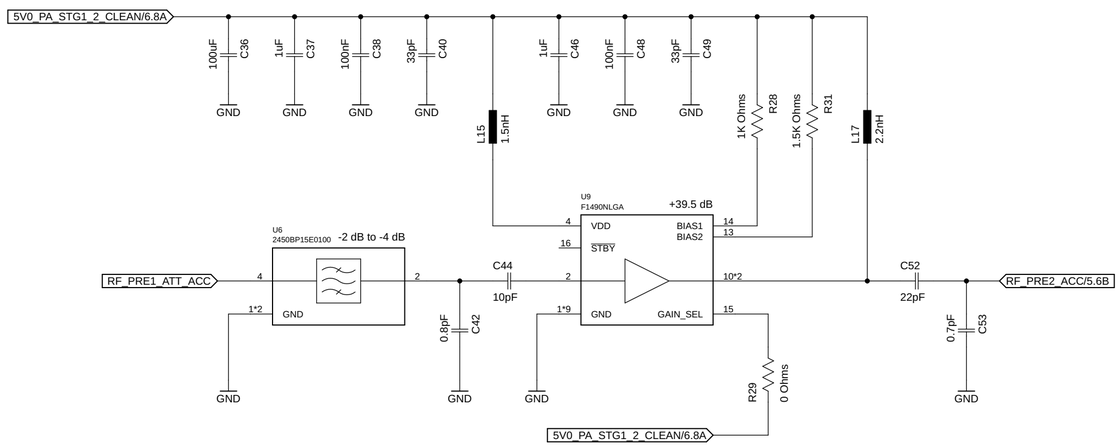

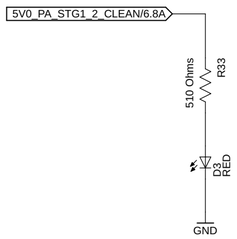

qo-100-upconverter	
Joao Silva	
Sheet: 4/6	Stage 1 & 2 amplifier
Date: 10/03/21 22:37	Rev: 2

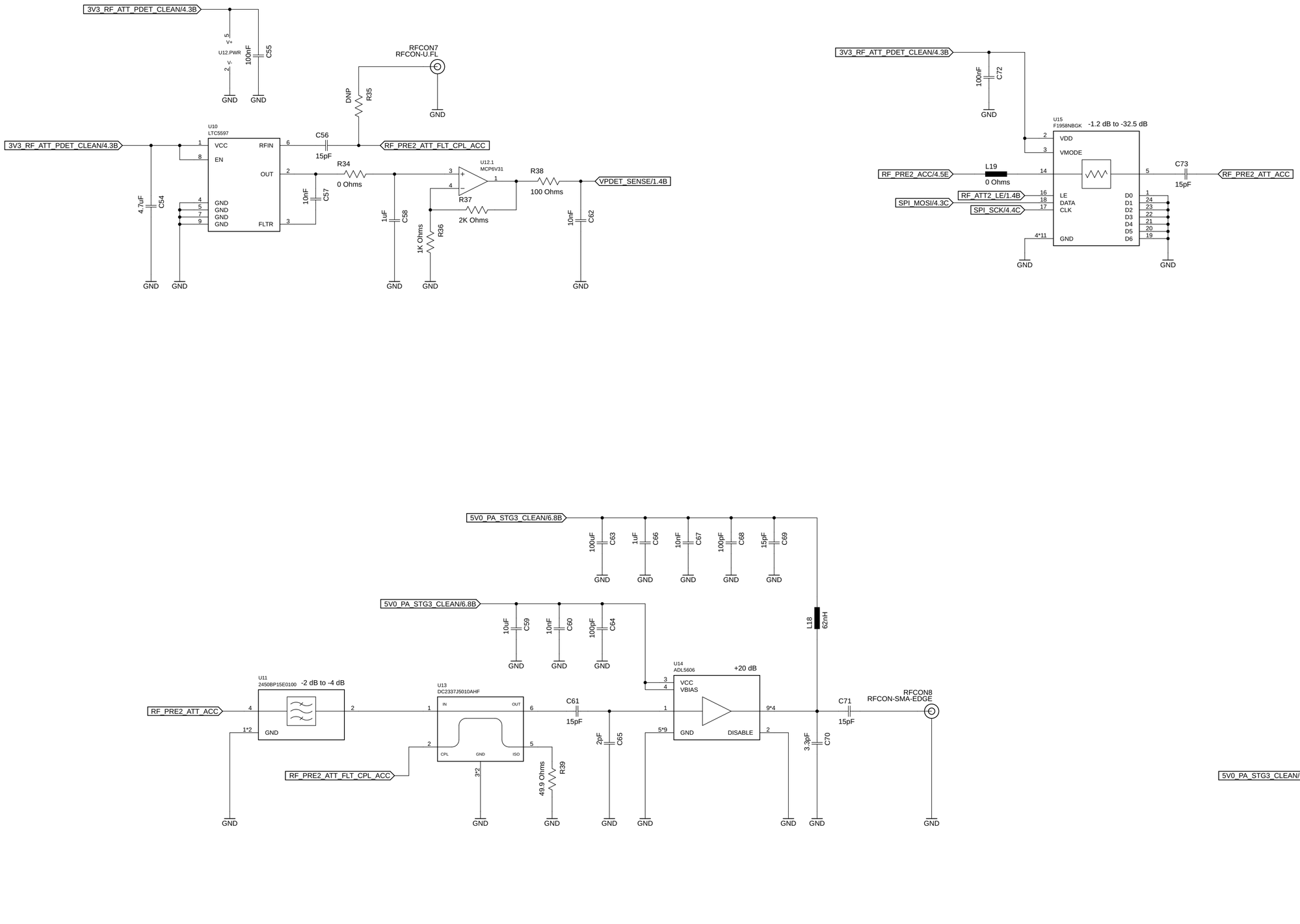

qo-100-upconverter	
Joao Silva	
Sheet: 5/6	Final (stage 3) amplifier + Power Detector
Date: 10/03/21 22:37	Rev: 2

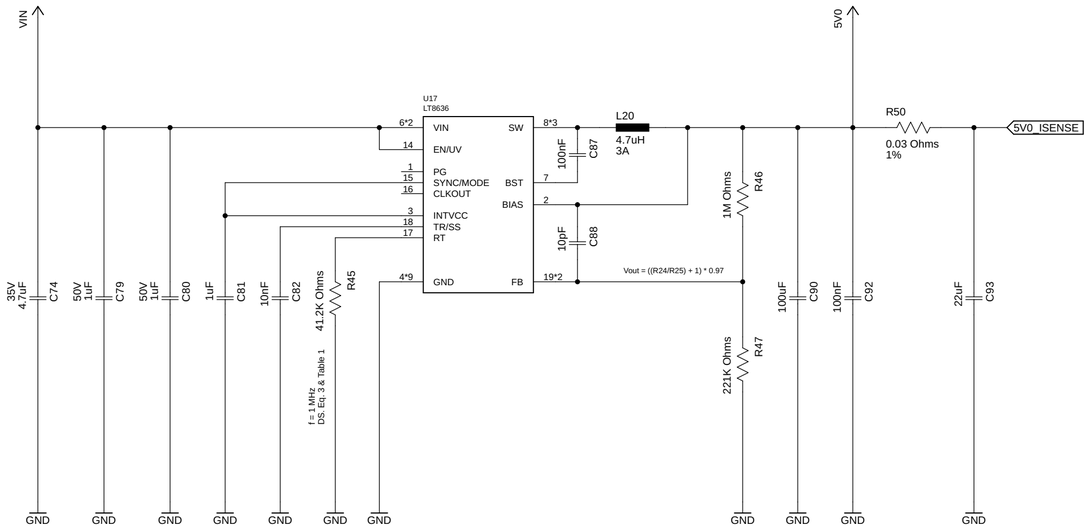

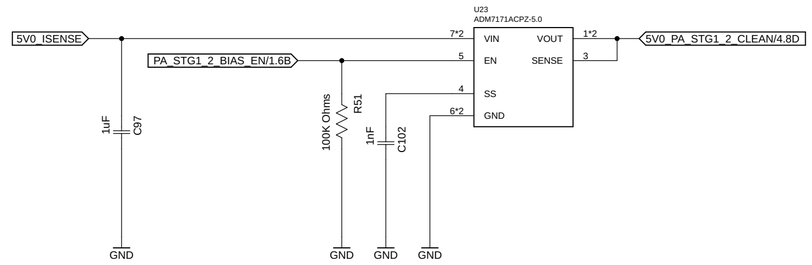

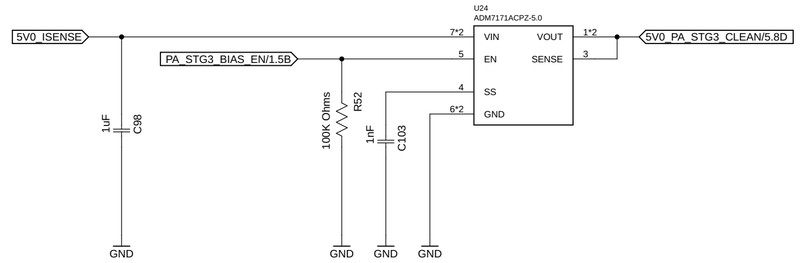

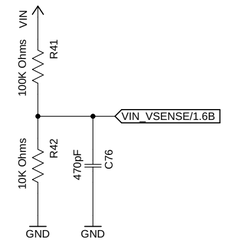

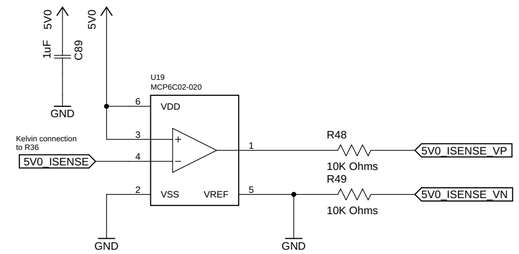

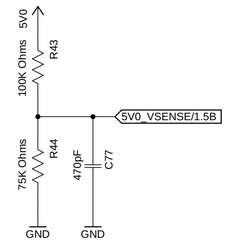

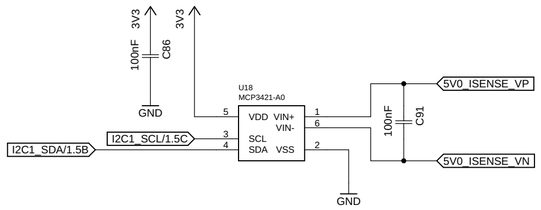

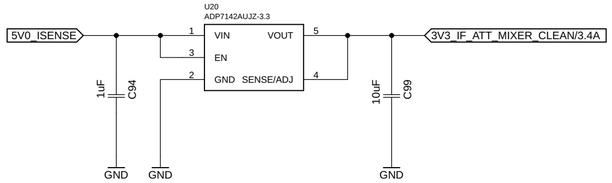

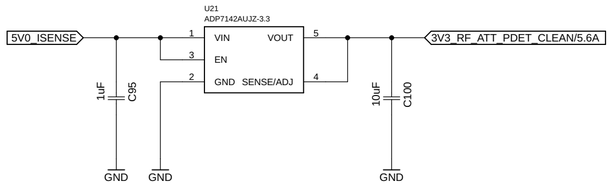

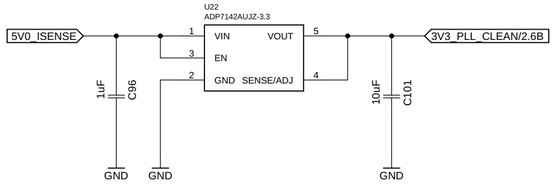

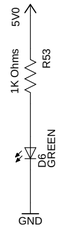

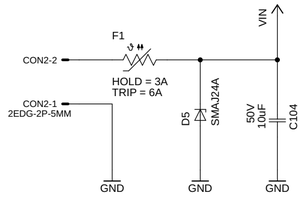

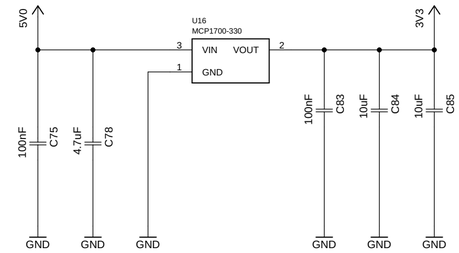

qo-100-upconverter	
Joao Silva	
Sheet: 6/6	Power
Date: 10/03/21 22:37	Rev: 2