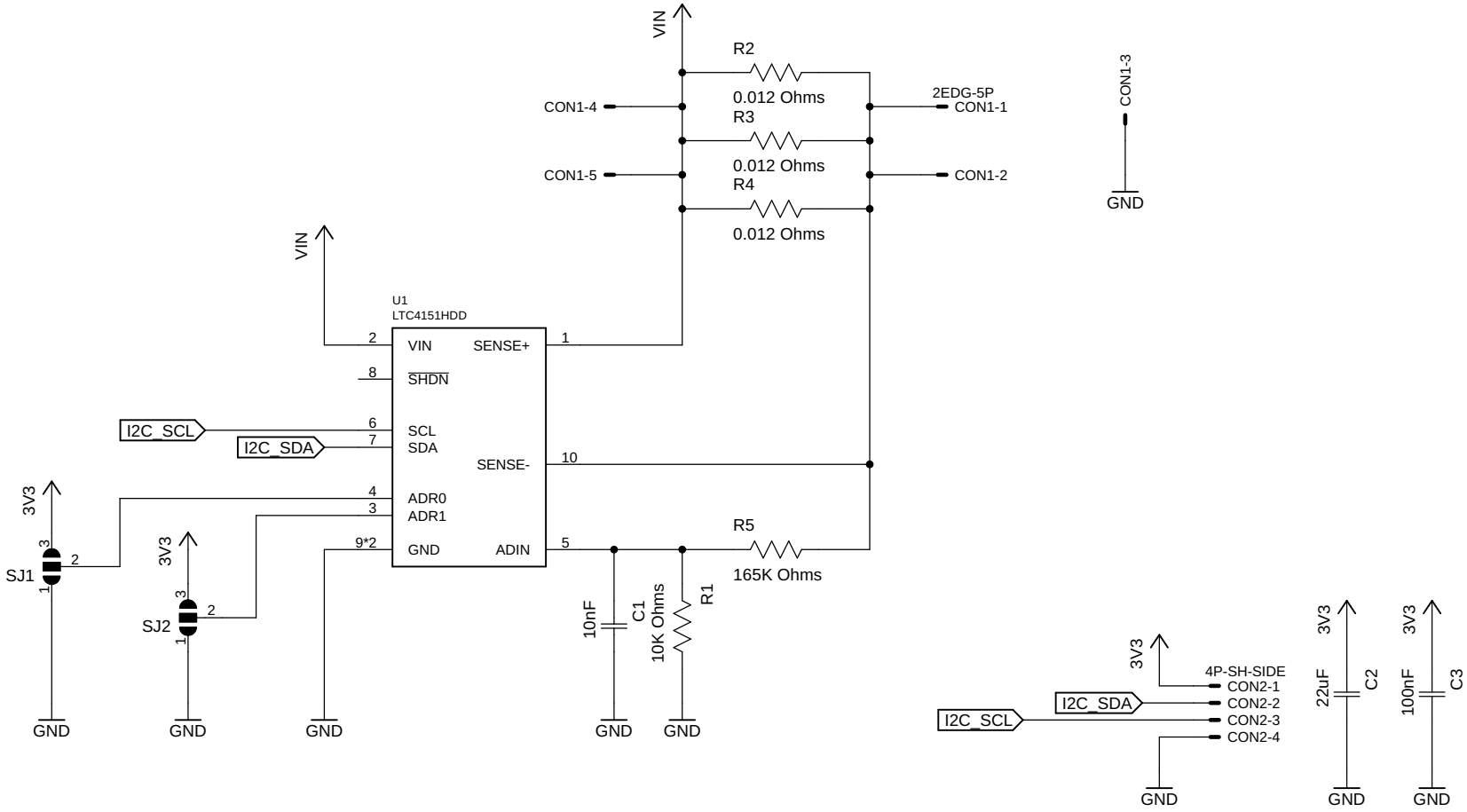

None	João Silva Logo
qo-100-digital-power-meter	
Joao Silva	
Sheet: 1/1	
Date: 20/09/20 22:56	Rev: 1