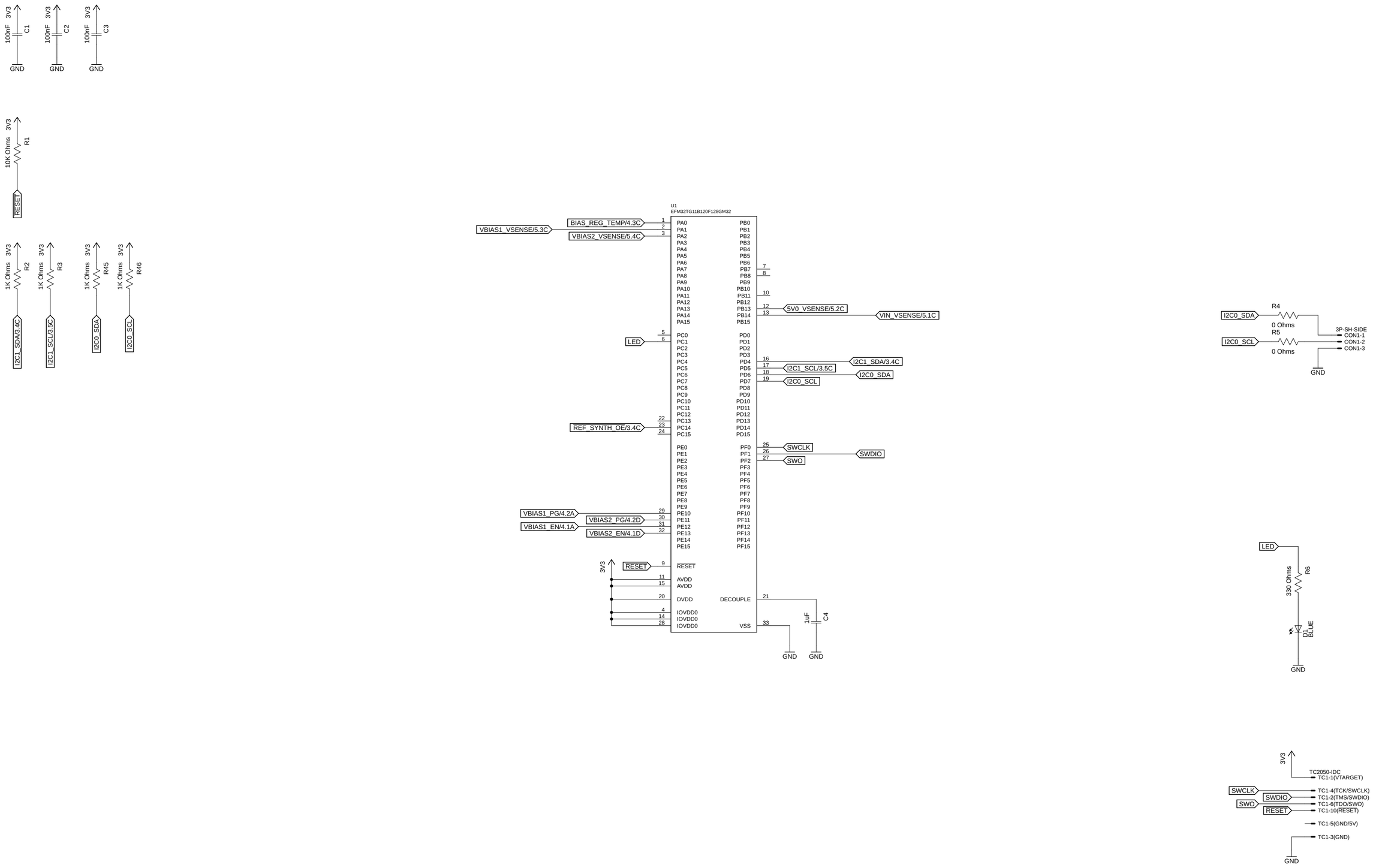

qo-100-lnb-controller	João Silva Logo
Joao Silva	
Sheet: 1/5	MCU
Date: 07/01/21 12:37	Rev: 1

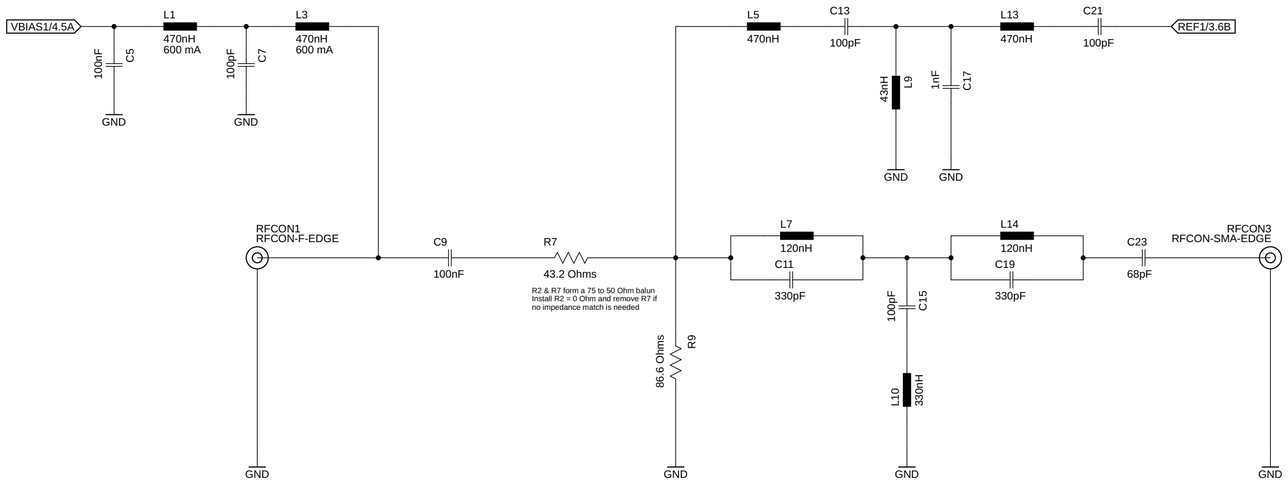

qo-100-lnb-controller	
Joao Silva	
Sheet: 2/5	RF Path
Date: 07/01/21 12:37	Rev: 1

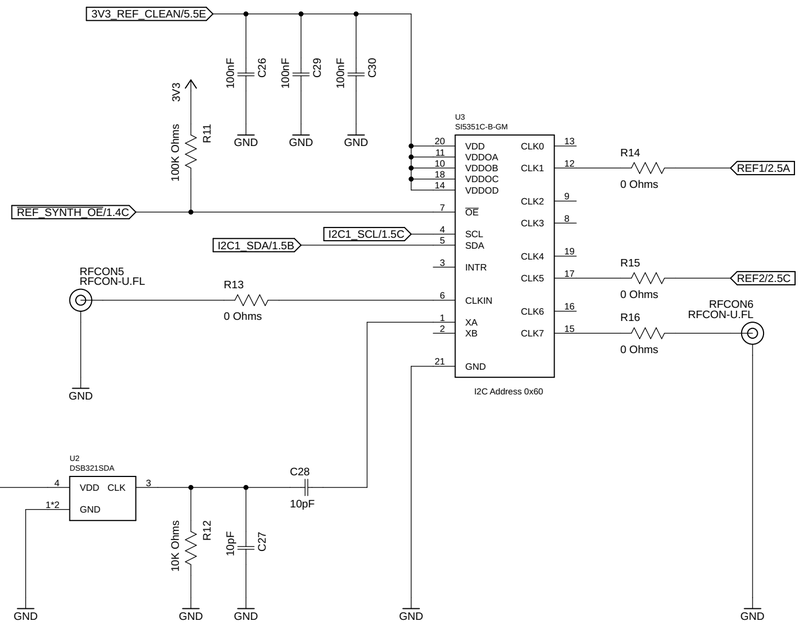

qo-100-lnb-controller	
Joao Silva	
Sheet: 3/5	Reference Synthesizer
Date: 07/01/21 12:37	Rev: 1

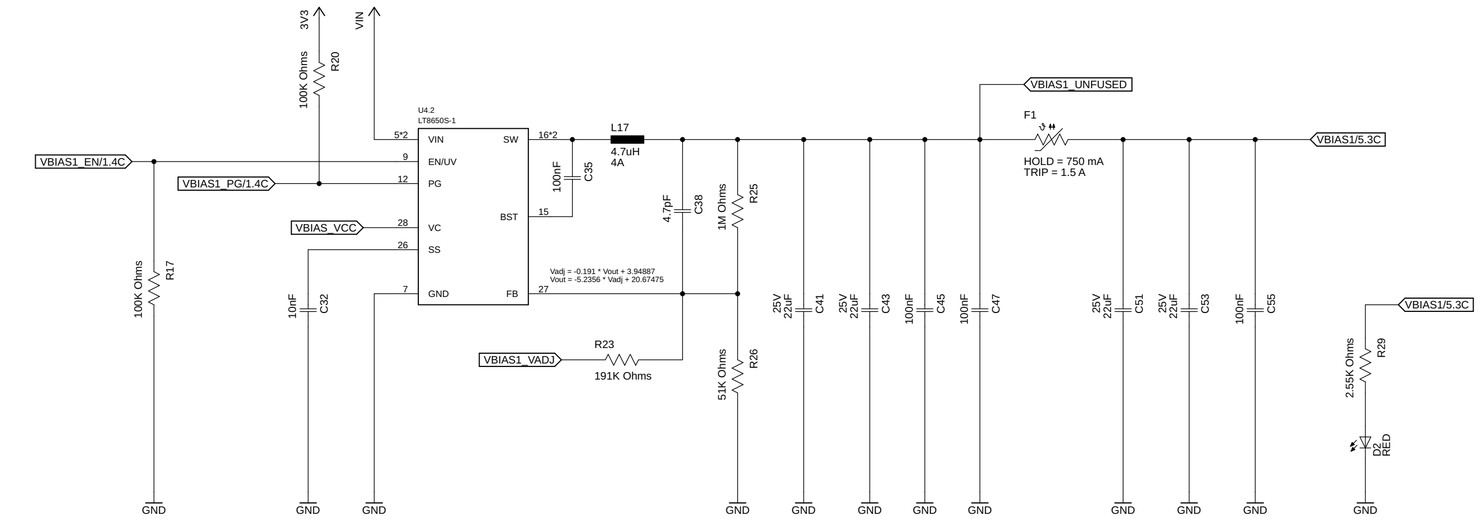

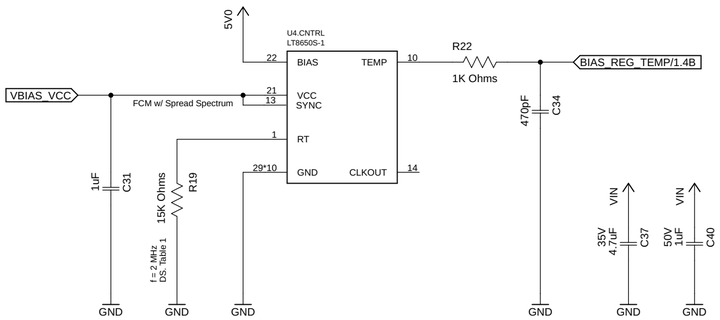

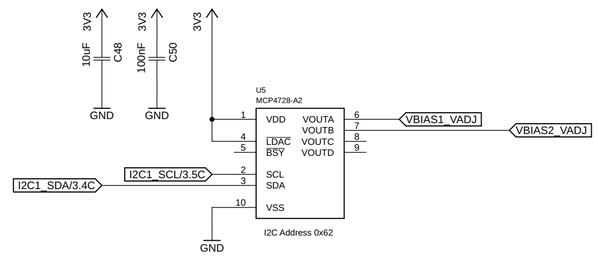

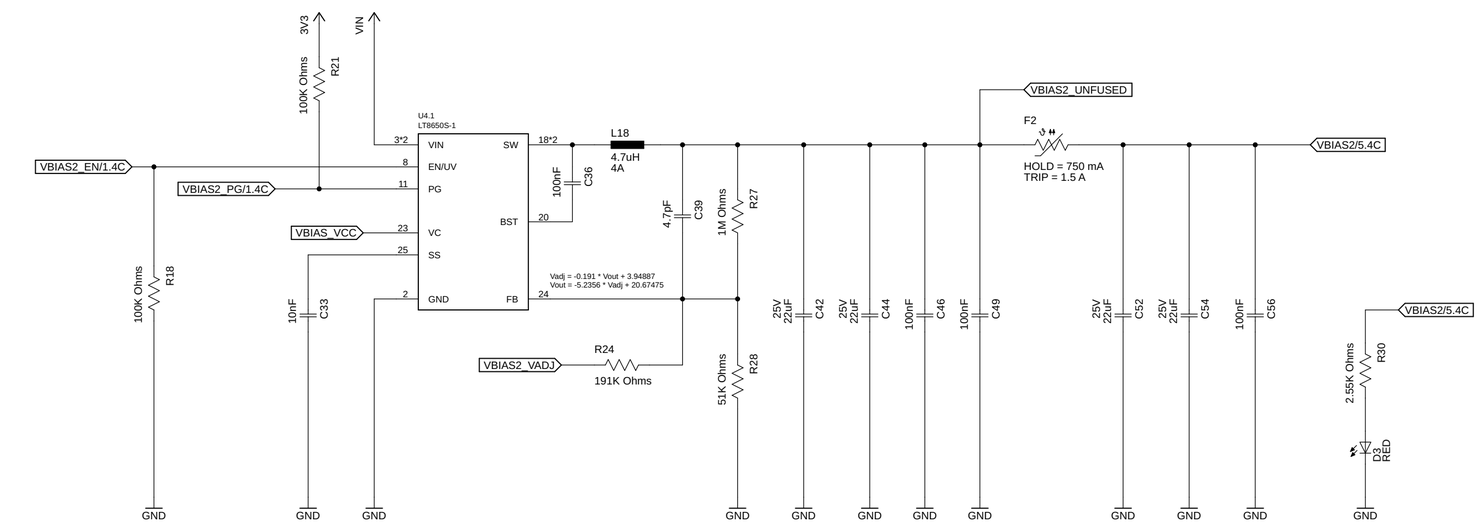

qo-100-lnb-controller	
Joao Silva	
Sheet: 4/5	Power 1 - LNB Bias
Date: 07/01/21 12:37	Rev: 1

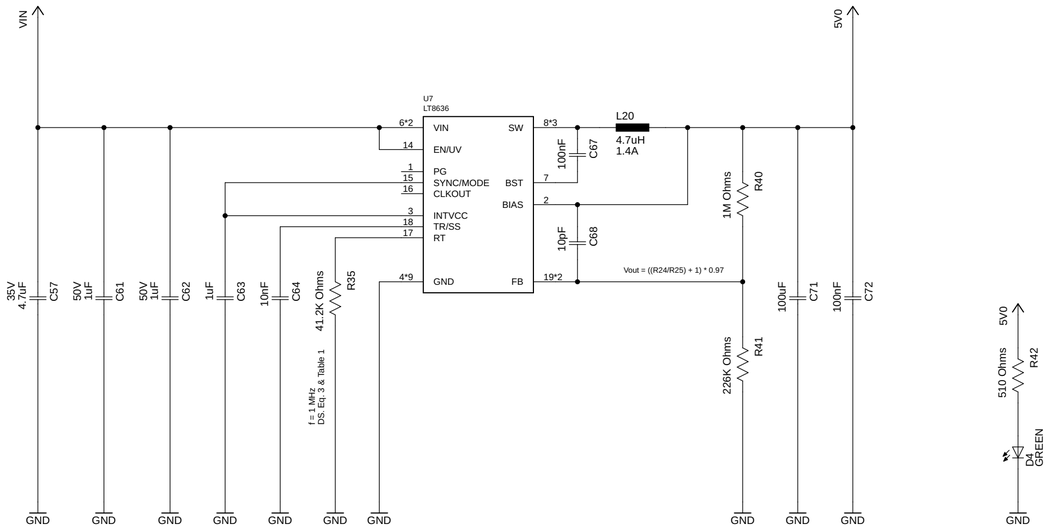

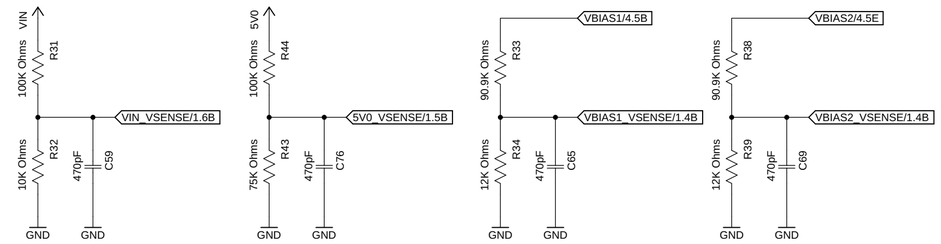

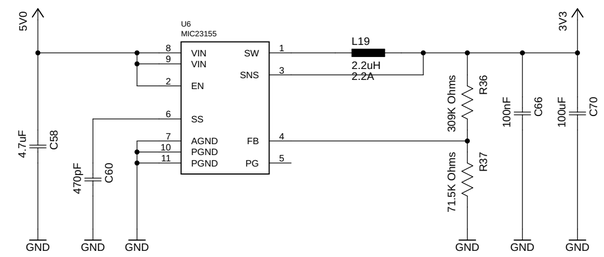

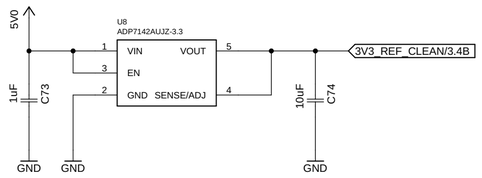

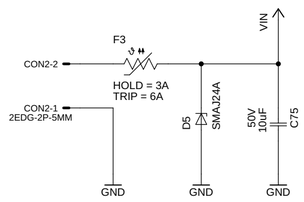

qo-100-lnb-controller	
Joao Silva	
Sheet: 5/5	Power 2 - Misc
Date: 07/01/21 12:37	Rev: 1