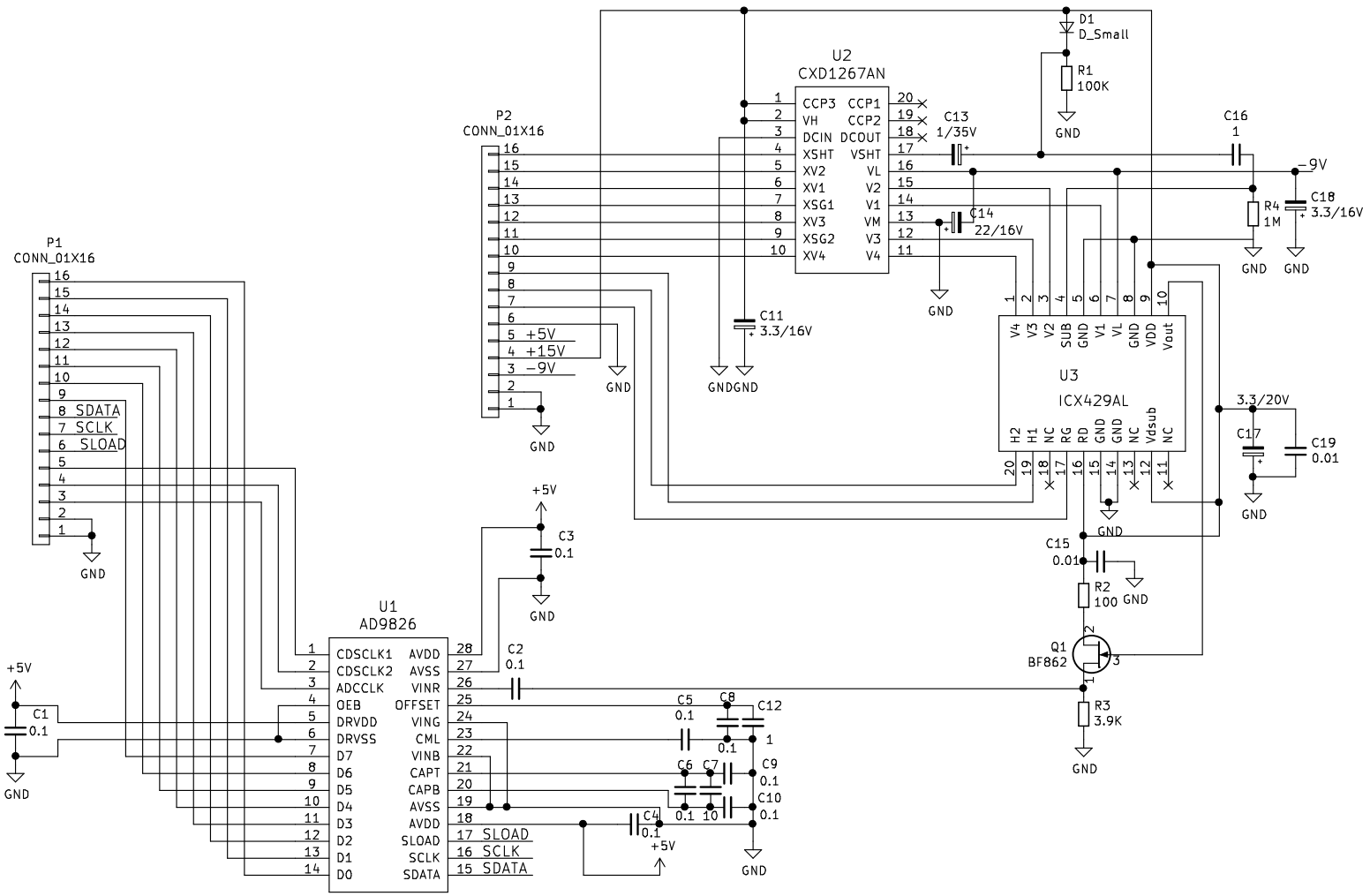

Sheet: /
File: ccd.sch

Title:

Size: A4	Date:	Rev:
KiCad E.D.A. kicad no-vcs-found-739656ubuntu16.04.1		Id: 1/1