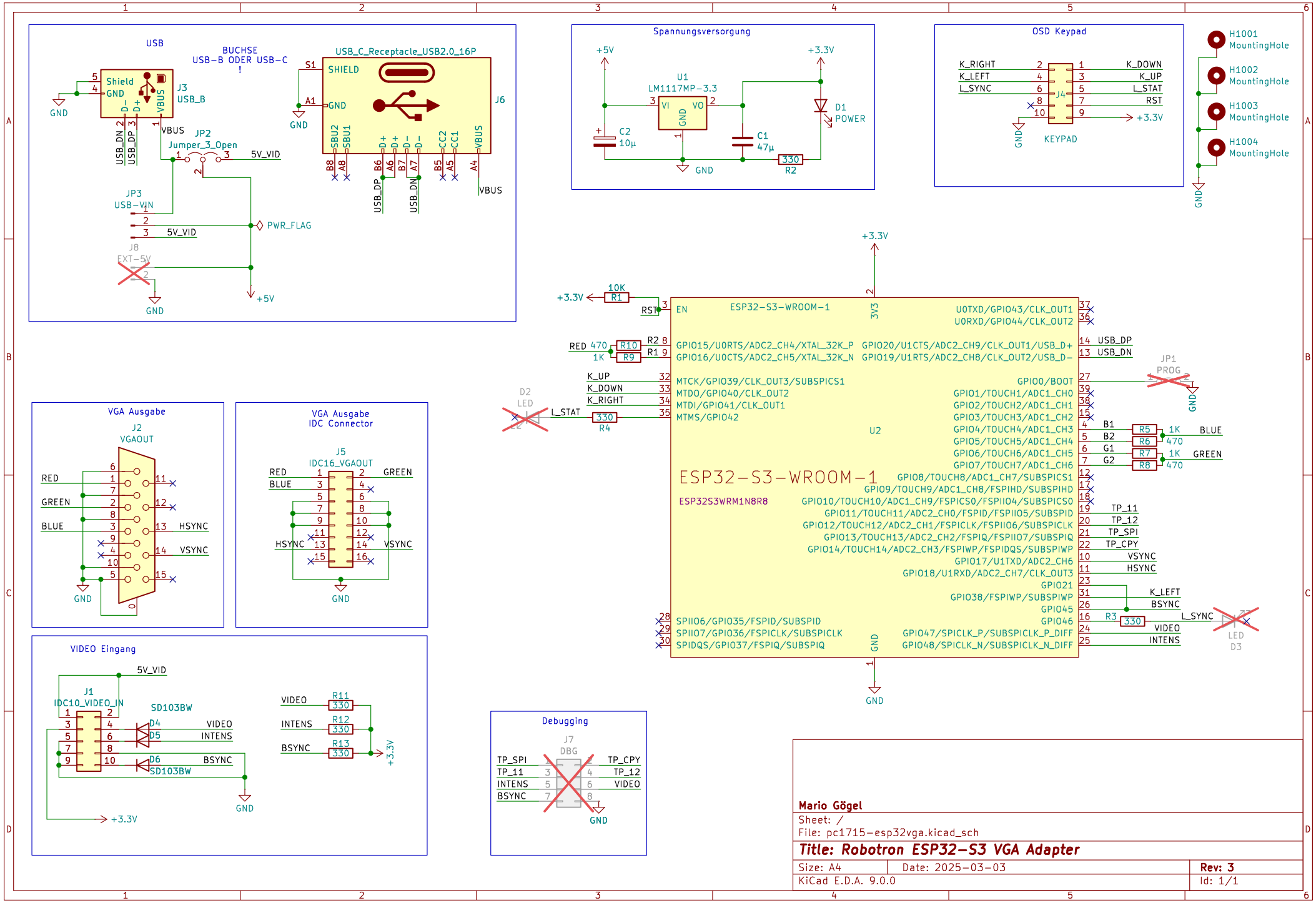
USB
BUCHSE
USB-B ODER USB-C
!
Shield
GND
J3
USB_B
VBUS
USB_DN
USB_DP
JP2
Jumper_3_Open
5V_VID
JP3
USB-VIN
PWR_FLAG
J8
EXT-5V
+5V
USB_C_Receptacle_USB2.0_16P
SHIELD
J6
Spannungsversorgung
+5V
+3.3V
U1
LM1117MP-3.3
VI
VO
C2
10µ
C1
47µ
D1
POWER
330
R2
OSD Keypad
K_RIGHT
K_LEFT
L_SYNC
K_DOWN
K_UP
L_STAT
RST
KEYPAD
J4
H1001
MountingHole
H1002
MountingHole
H1003
MountingHole
H1004
MountingHole
10K
R1
RST
RED 470
R10
1K
R9
R2 8
R1 9
K_UP
K_DOWN
K_RIGHT
D2
LED
L_STAT
330
R4
ESP32-S3-WROOM-1
EN
3V3
U0TXD/GPIO43/CLK_OUT1
U0RXD/GPIO44/CLK_OUT2
GPIO15/U0RTS/ADC2_CH4/XTAL_32K_P
GPIO16/U0CTS/ADC2_CH5/XTAL_32K_N
GPIO20/U1CTS/ADC2_CH9/CLK_OUT1/USB_D+
GPIO19/U1RTS/ADC2_CH8/CLK_OUT2/USB_D-
USB_DP
USB_DN
MTCK/GPIO39/CLK_OUT3/SUBSPICS1
MTDO/GPIO40/CLK_OUT2
MTDI/GPIO41/CLK_OUT1
MTMS/GPIO42
GPIO0/BOOT
GPIO1/TOUCH1/ADC1_CH0
GPIO2/TOUCH2/ADC1_CH1
GPIO3/TOUCH3/ADC1_CH2
GPIO4/TOUCH4/ADC1_CH3
GPIO5/TOUCH5/ADC1_CH4
GPIO6/TOUCH6/ADC1_CH5
GPIO7/TOUCH7/ADC1_CH6
U2
JP1
PROG
B1
B2
G1
G2
R5
R6
R7
R8
1K
470
BLUE
GREEN
ESP32-S3-WROOM-1
ESP32S3WRM1N8R8
GPIO8/TOUCH8/ADC1_CH7/SUBSPICS1
GPIO9/TOUCH9/ADC1_CH8/FSPIHD/SUBSPIHD
GPIO10/TOUCH10/ADC1_CH9/FSPICS0/FSPII04/SUBSPICS0
GPIO11/TOUCH11/ADC2_CH0/FSPID/FSPII05/SUBSPID
GPIO12/TOUCH12/ADC2_CH1/FSPICLK/FSPII06/SUBSPICLK
GPIO13/TOUCH13/ADC2_CH2/FSPIQ/FSPII07/SUBSPIQ
GPIO14/TOUCH14/ADC2_CH3/FSPIWP/FSPIDQS/SUBSPIWP
GPIO17/U1TXD/ADC2_CH6
GPIO18/U1RXD/ADC2_CH7/CLK_OUT3
GPIO21
GPIO38/FSPIWP/SUBSPIWP
GPIO45
GPIO46
TP_11
TP_12
TP_SPI
TP_CPY
VSYNC
HSYNC
K_LEFT
BSYNC
R3
330
L_SYNC
VIDEO
INTENS
LED
D3
SPIIO6/GPIO35/FSPID/SUBSPID
SPIIO7/GPIO36/FSPICLK/SUBSPICLK
SPIDQS/GPIO37/FSPIQ/SUBSPIQ
GPIO47/SPICLK_P/SUBSPICLK_P_DIFF
GPIO48/SPICLK_N/SUBSPICLK_N_DIFF
GND
VGA Ausgabe
J2
VGAOUT
RED
GREEN
BLUE
HSYNC
VSYNC
VGA Ausgabe
IDC Connector
J5
IDC16_VGAOUT
VIDEO Eingang
J1
IDC10_VIDEO_IN
5V_VID
SD103BW
D4
D5
D6
VIDEO
INTENS
BSYNC
R11
R12
R13
330
+3.3V
Debugging
J7
DBG
TP_SPI
TP_11
INTENS
BSYNC
TP_CPY
TP_12
VIDEO
Mario Gögel
Sheet: /
File: pc1715-esp32vga.kicad_sch
Title: Robotron ESP32-S3 VGA Adapter
Size: A4
Date: 2025-03-03
Rev: 3
KiCad E.D.A. 9.0.0
Id: 1/1