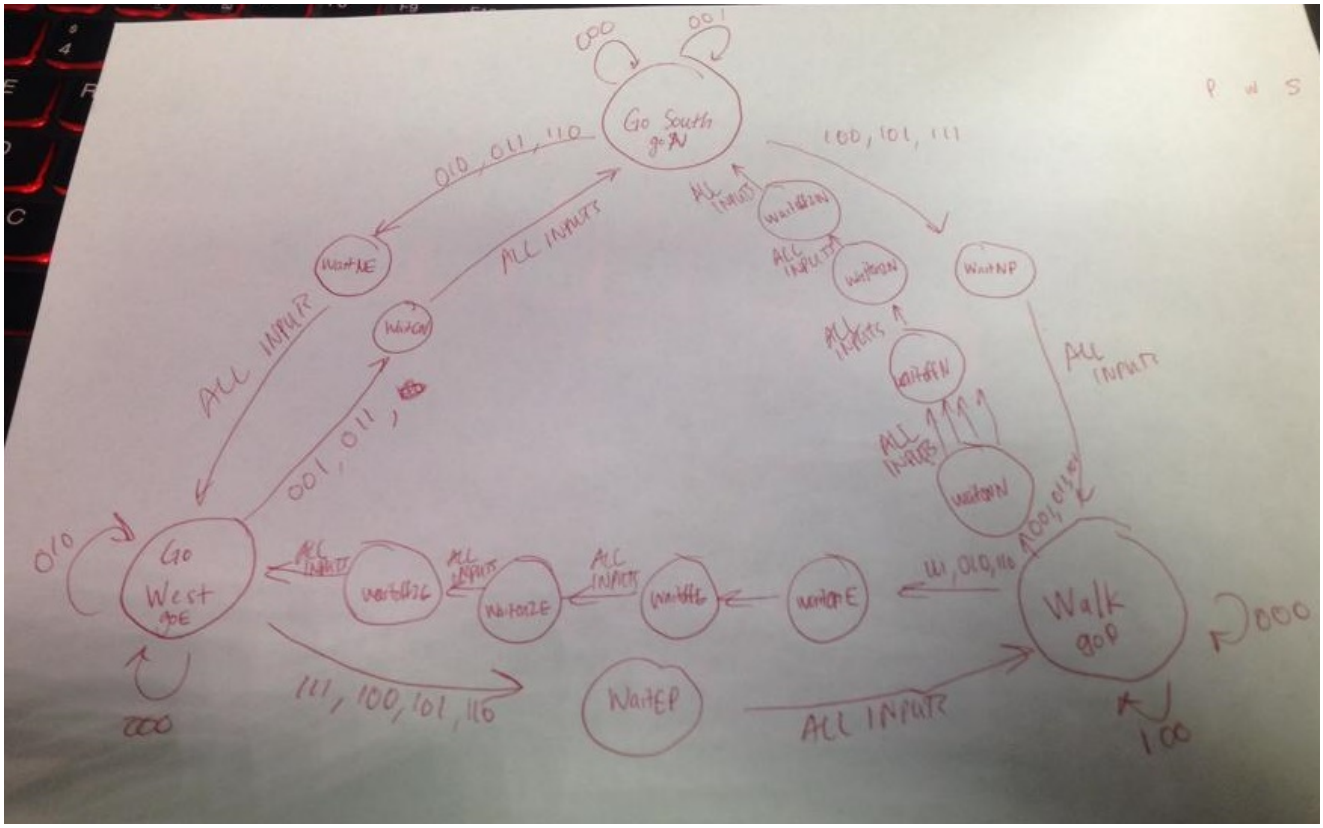
Go South
Go West
Walk
WaitNE
WaitNW
WaitNP
WaitSW
WaitSE
WaitEP
ALL INPUTS
000
001
010
011
100
101
110
111

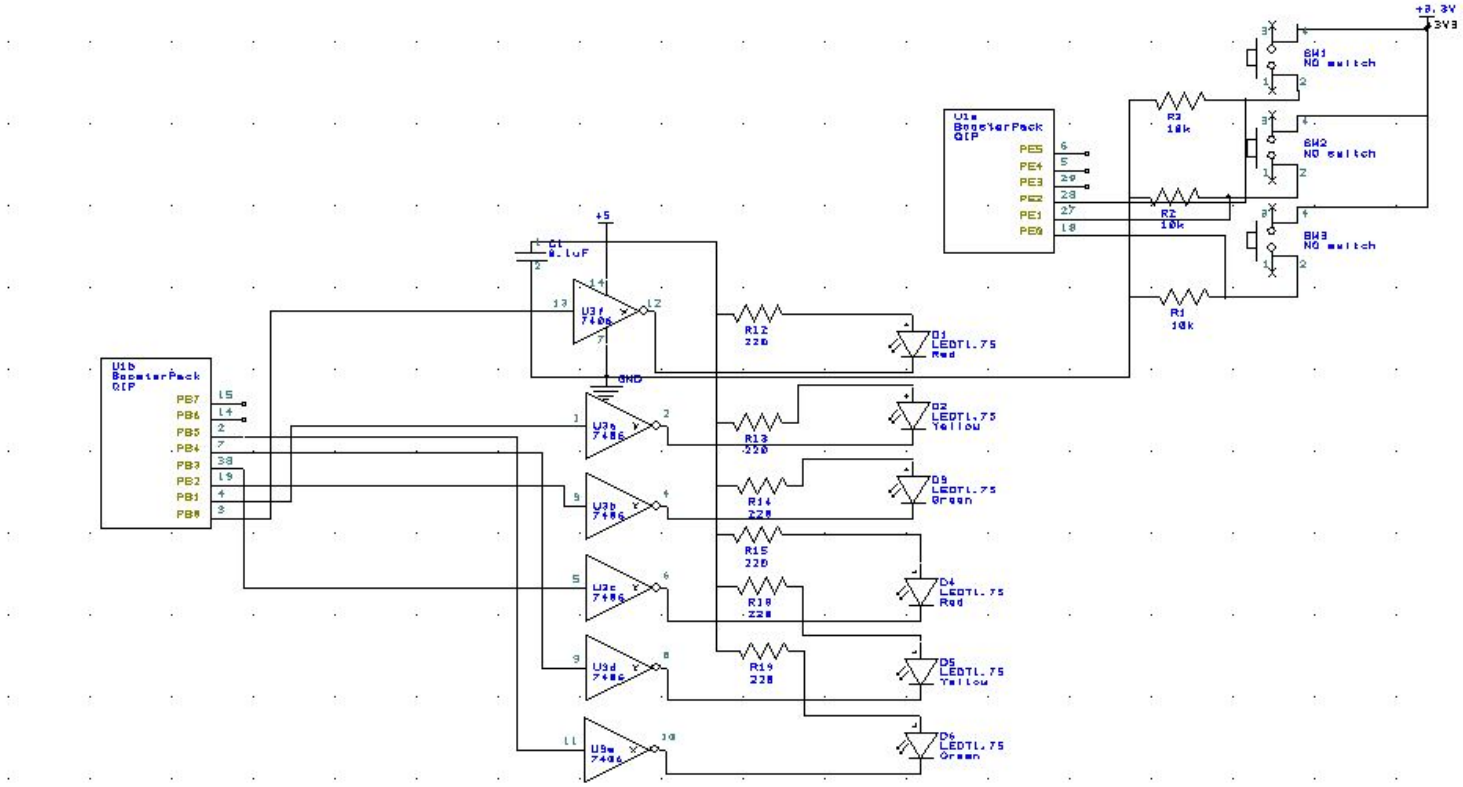
U1b BoosterPack QIP
U1a BoosterPack QIP
PB7
PB6
PB5
PB4
PB3
PB2
PB1
PB0
PE5
PE4
PE3
PE2
PE1
PE0
+5
GND
+3.3V
3V3
C1 0.1uF
U3f 7406
U3b 7406
U3c 7406
U3d 7406
U3e 7406
R12 220
R13 220
R14 220
R15 220
R18 220
R19 220
D1 LEDTL.75 Red
D2 LEDTL.75 Yellow
D3 LEDTL.75 Green
D4 LEDTL.75 Red
D5 LEDTL.75 Yellow
D6 LEDTL.75 Green
R3 10k
R2 10k
R1 10k
SW1 NO switch
SW2 NO switch
SW3 NO switch

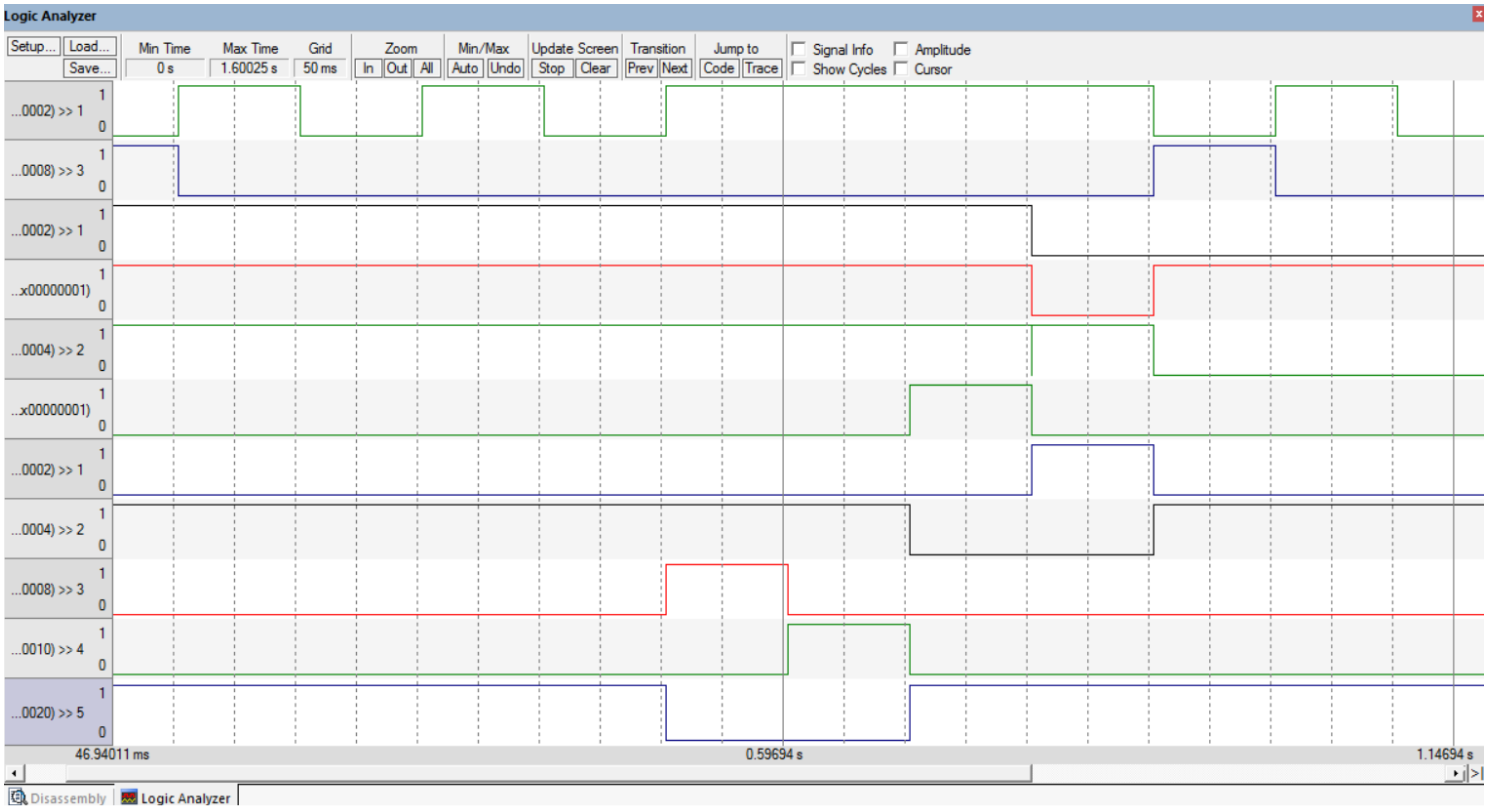
Logic Analyzer
Setup...
Load...
Save...
Min Time
0 s
Max Time
1.60025 s
Grid
50 ms
Zoom
In
Out
All
Min/Max
Auto
Undo
Update Screen
Stop
Clear
Transition
Prev
Next
Jump to
Code
Trace
Signal Info
Show Cycles
Amplitude
Cursor
...0002) >> 1
...0008) >> 3
...0002) >> 1
...x00000001)
...0004) >> 2
...x00000001)
...0002) >> 1
...0004) >> 2
...0008) >> 3
...0010) >> 4
...0020) >> 5
46.94011 ms
0.59694 s
1.14694 s
Disassembly
Logic Analyzer