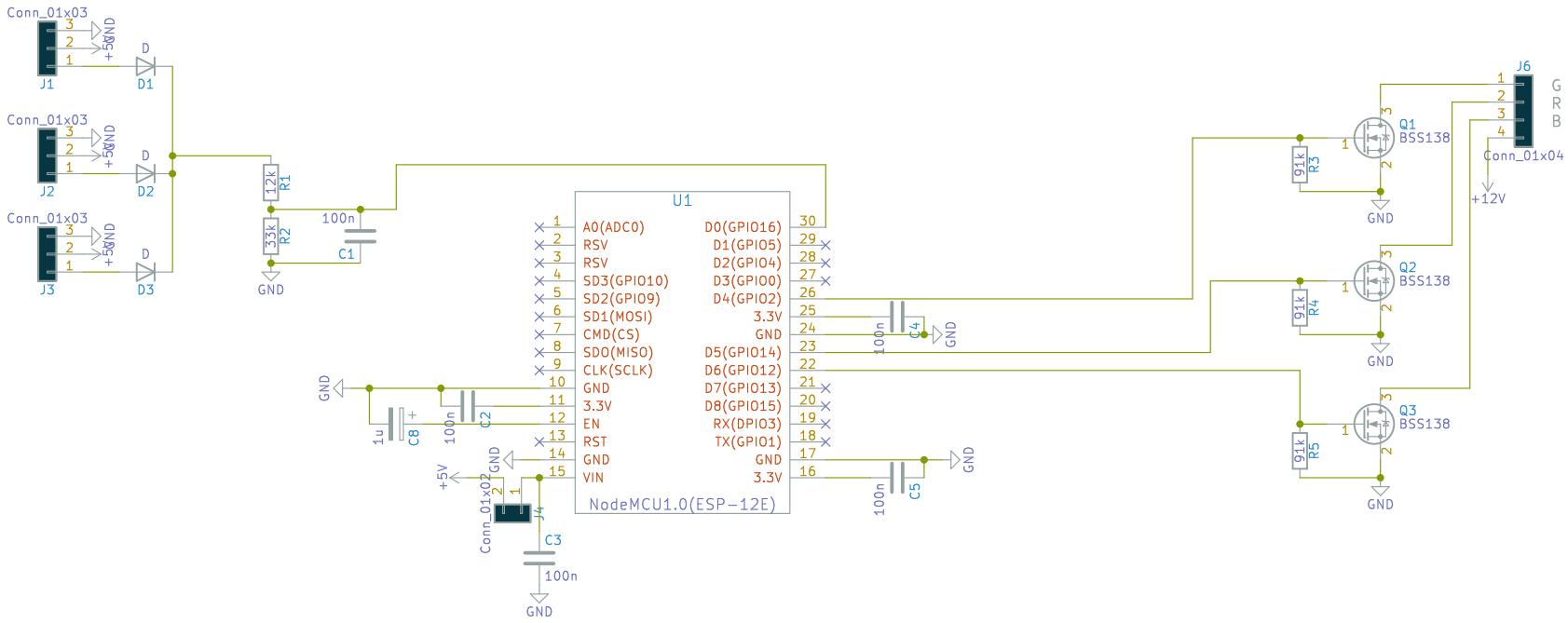

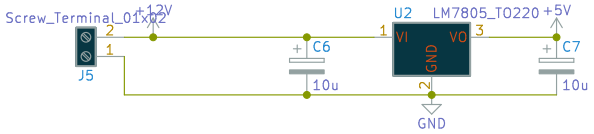

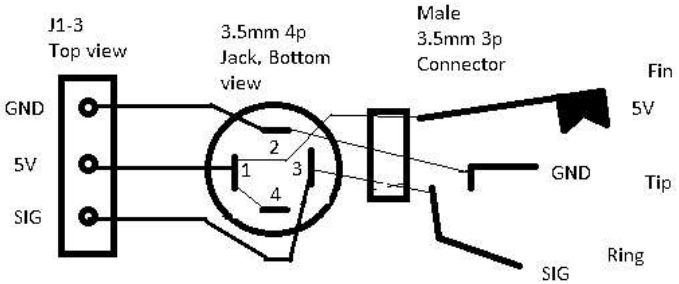

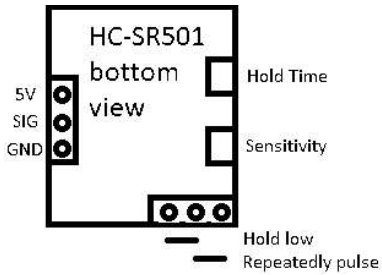

Sheet: /
File: led_unterm_bett.kicad_sch

Title: LED unterm Bett – Low Light Control Module

Size: A4	Date: 2020-11-15	Rev: v0.0.1
KiCad E.D.A. kicad (6.0.0)		Id: 1/1