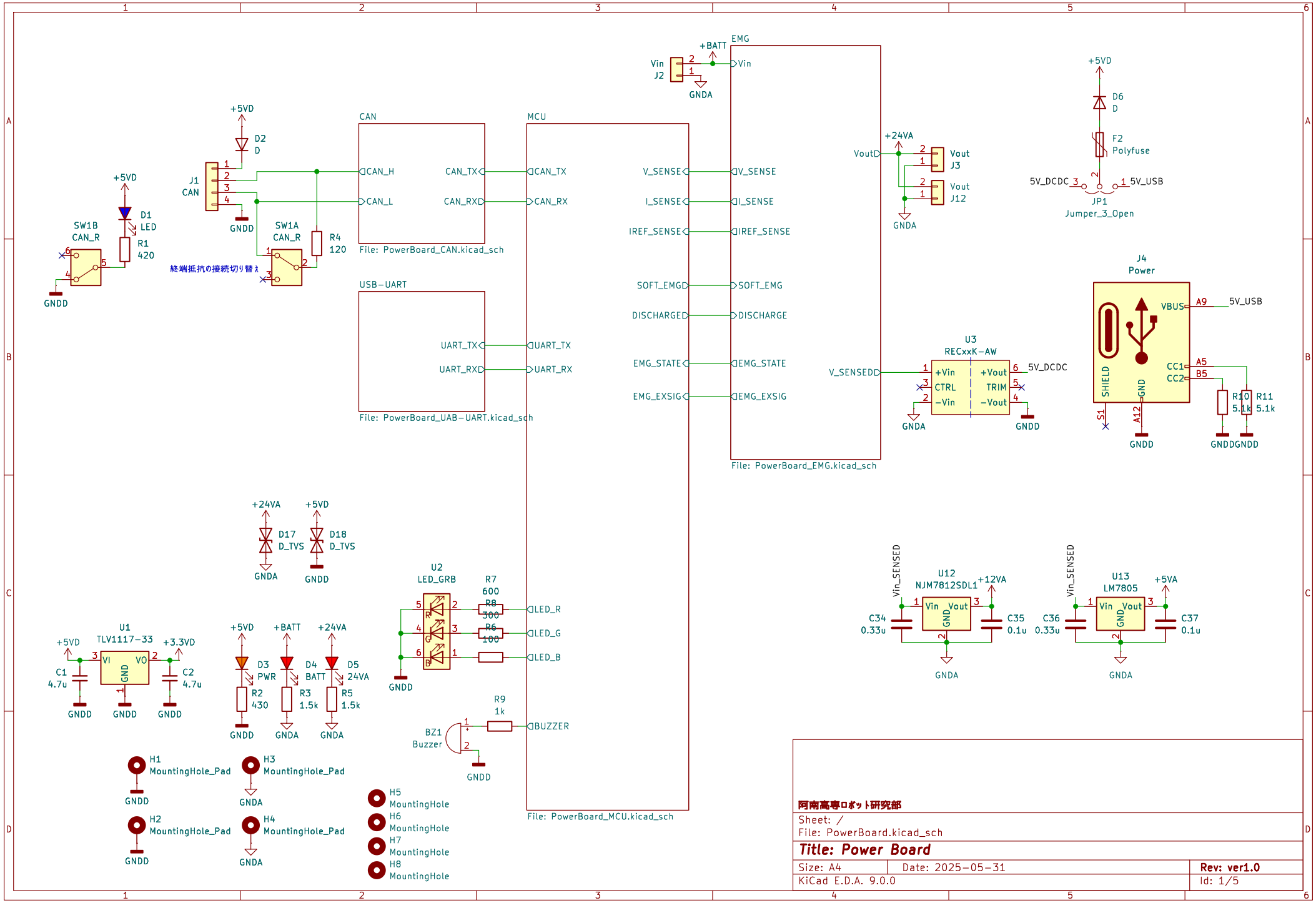
CAN
File: PowerBoard_CAN.kicad_sch
USB-UART
File: PowerBoard_UAB-UART.kicad_sch
MCU
File: PowerBoard_MCU.kicad_sch
EMG
File: PowerBoard_EMG.kicad_sch
J1 CAN
SW1B CAN_R
SW1A CAN_R
終端抵抗の接続切り替え
D1 LED
R1 420
D2 D
R4 120
Vin J2
+BATT
GNDA
GNDD
+5VD
+24VA
Vout J3
Vout J12
D6 D
F2 Polyfuse
5V_DCDC
5V_USB
JP1 Jumper_3_Open
J4 Power
VBUS
CC1
CC2
SHIELD
GND
R10 5.1k
R11 5.1k
U3 RECxxK-AW
+Vin
CTRL
-Vin
+Vout
TRIM
-Vout
V_SENSED
D17 D_TVS
D18 D_TVS
U2 LED_GRB
R7 600
R8 300
R6 100
LED_R
LED_G
LED_B
U1 TLV1117-33
VI
VO
+3.3VD
C1 4.7u
C2 4.7u
D3 PWR
D4 BATT
D5 24VA
R2 430
R3 1.5k
R5 1.5k
R9 1k
BZ1 Buzzer
BUZZER
U12 NJM7812SDL1
+12VA
Vin_SENSED
C34 0.33u
C35 0.1u
U13 LM7805
+5VA
C36 0.33u
C37 0.1u
H1 MountingHole_Pad
H2 MountingHole_Pad
H3 MountingHole_Pad
H4 MountingHole_Pad
H5 MountingHole
H6 MountingHole
H7 MountingHole
H8 MountingHole
阿南高専ロボット研究部
Sheet: /
File: PowerBoard.kicad_sch
Title: Power Board
Size: A4
Date: 2025-05-31
Rev: ver1.0
KiCad E.D.A. 9.0.0
Id: 1/5

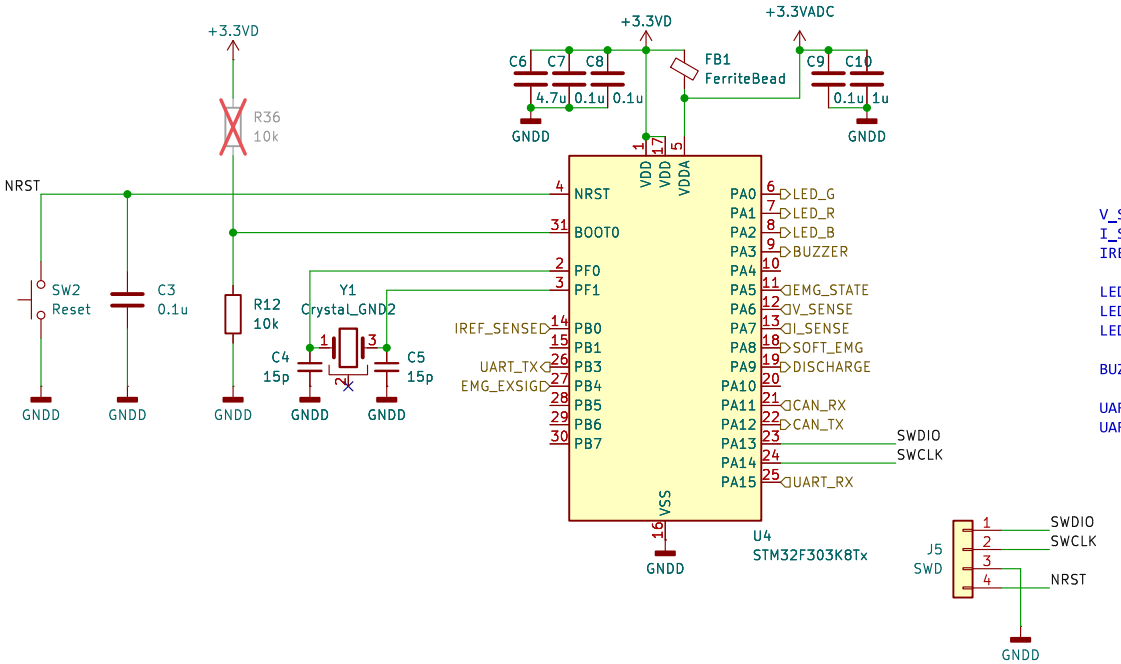


```
V_SENSE:    PA6: ADC2_IN3
I_SENSE:    PA7: ADC2_IN4
IREF_SENSE: PB0: ADC1_IN11

LED_R: PA1: TIM2_CH2
LED_G: PA0: TIM2_CH1
LED_B: PA2: TIM2_CH3

BUZZER: PB0: TIM3_CH3

UART_TX: PB3:  USART2_TX
UART_RX: PA15: USART2_RX
```

阿南高専ロボット研究部

Sheet: /MCU/
File: PowerBoard_MCU.kicad_sch

Title: Power Board / MCU

Size: A4	Date: 2025-05-31	Rev: ver1.0
KiCad E.D.A. 9.0.0		Id: 2/5

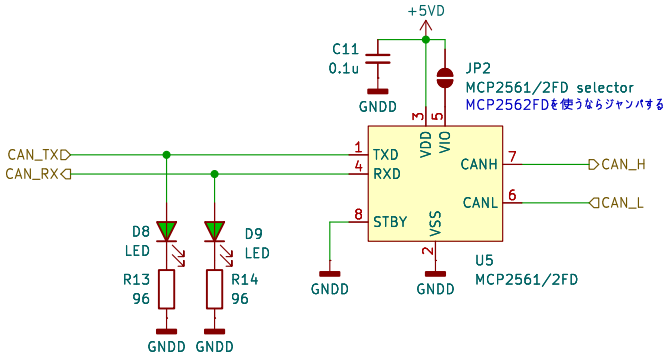

阿南高専ロボット研究部

Sheet: /CAN/
File: PowerBoard_CAN.kicad_sch

Title: Power Board / CAN

Size: A4	Date: 2025-05-31	Rev: ver1.0
KiCad E.D.A. 9.0.0		Id: 3/5

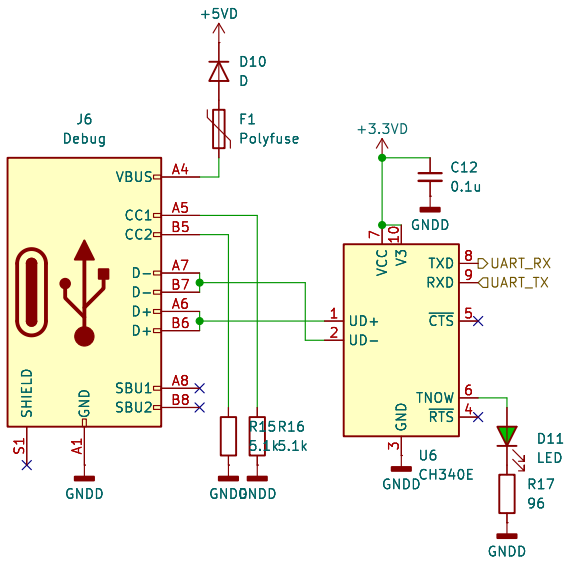

阿南高専ロボット研究部

Sheet: /USB−UART/

File: PowerBoard_UAB−UART.kicad_sch

Title: Power Board / USB−UART

Size: A4	Date: 2025−05−31	Rev: ver1.0
KiCad E.D.A. 9.0.0		Id: 4/5

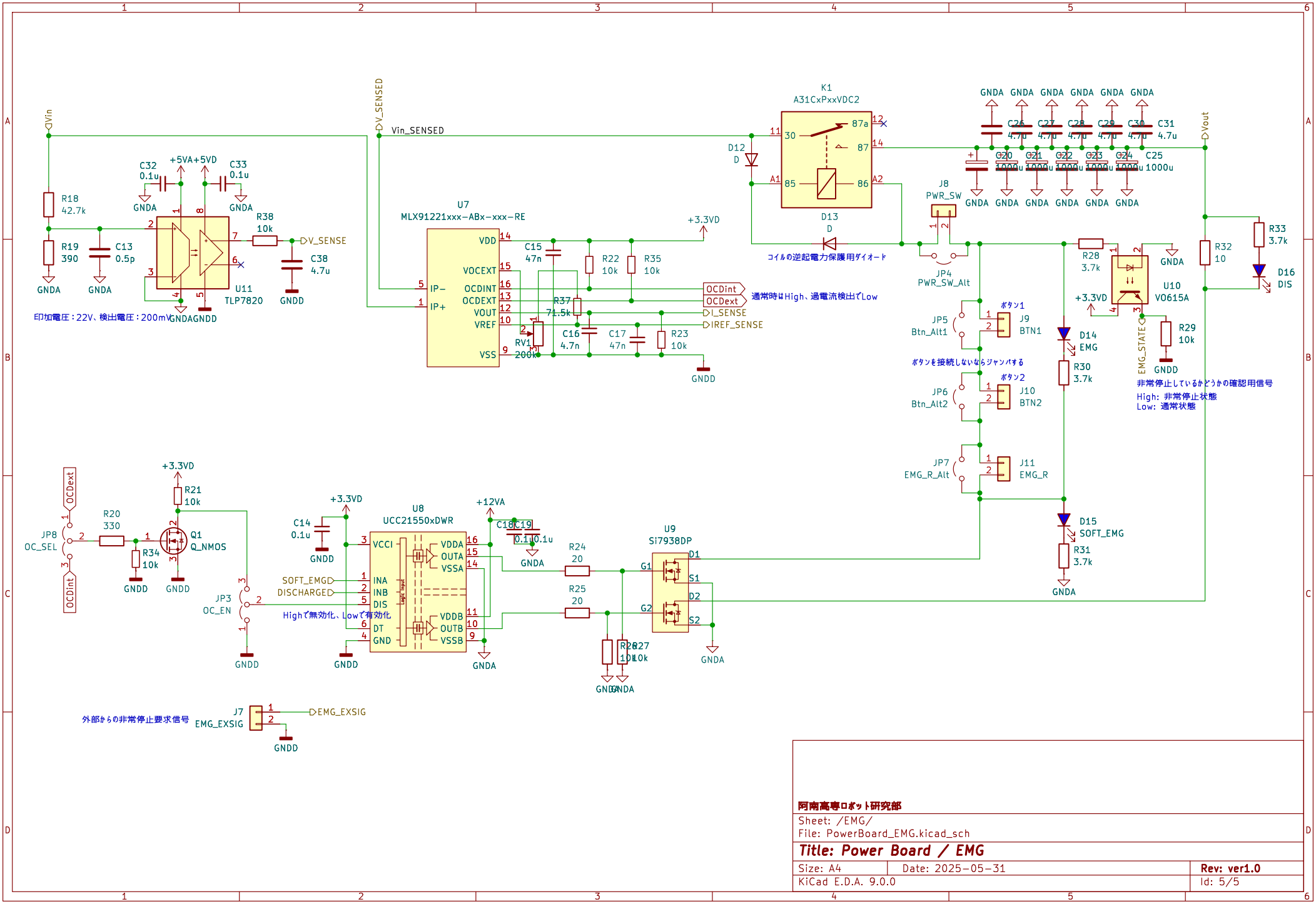

阿南高専ロボット研究部

Sheet: /EMG/

File: PowerBoard_EMG.kicad_sch

Title: Power Board / EMG

Size: A4	Date: 2025-05-31	Rev: ver1.0
KiCad E.D.A. 9.0.0		Id: 5/5