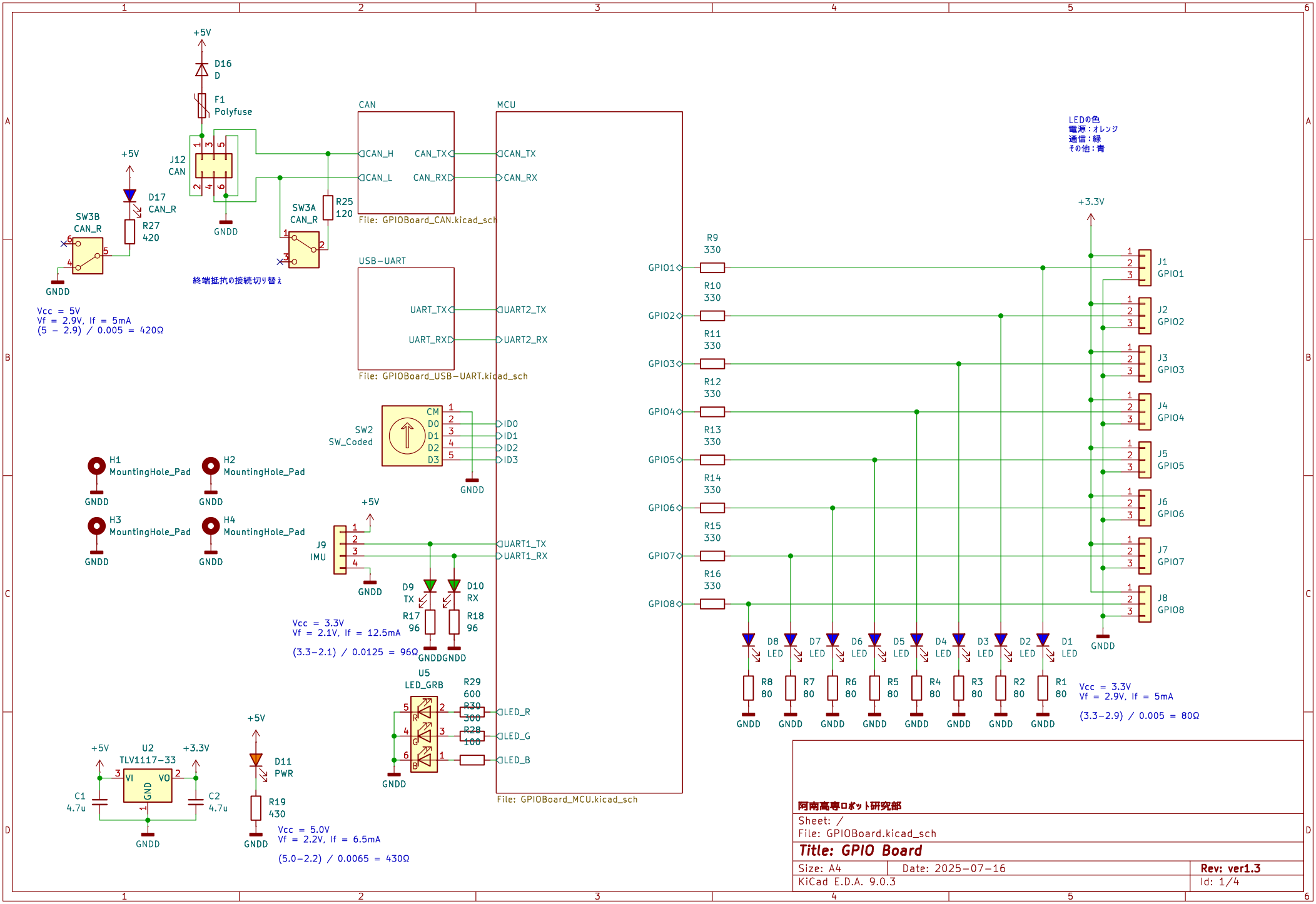
+5V
D16
D
F1
Polyfuse
J12
CAN
GNDD
+5V
D17
CAN_R
R27
420
SW3B
CAN_R
GNDD
Vcc = 5V
Vf = 2.9V, If = 5mA
(5 − 2.9) / 0.005 = 420Ω
SW3A
CAN_R
R25
120
終端抵抗の接続切り替え
CAN
CAN_H
CAN_L
CAN_TX
CAN_RX
File: GPIOBoard_CAN.kicad_sch
MCU
CAN_TX
CAN_RX
USB−UART
UART_TX
UART_RX
UART2_TX
UART2_RX
File: GPIOBoard_USB−UART.kicad_sch
SW2
SW_Coded
CM
D0
D1
D2
D3
ID0
ID1
ID2
ID3
GNDD
H1
MountingHole_Pad
H2
MountingHole_Pad
H3
MountingHole_Pad
H4
MountingHole_Pad
+5V
J9
IMU
UART1_TX
UART1_RX
D9
TX
D10
RX
R17
96
R18
96
Vcc = 3.3V
Vf = 2.1V, If = 12.5mA
(3.3−2.1) / 0.0125 = 96Ω
U5
LED_GRB
R29
600
R30
300
R28
100
LED_R
LED_G
LED_B
File: GPIOBoard_MCU.kicad_sch
+5V
U2
TLV1117−33
+3.3V
VI
VO
GND
C1
4.7u
C2
4.7u
+5V
D11
PWR
R19
430
Vcc = 5.0V
Vf = 2.2V, If = 6.5mA
(5.0−2.2) / 0.0065 = 430Ω
GPIO1
GPIO2
GPIO3
GPIO4
GPIO5
GPIO6
GPIO7
GPIO8
R9
330
R10
330
R11
330
R12
330
R13
330
R14
330
R15
330
R16
330
LEDの色
電源：オレンジ
通信：緑
その他：青
+3.3V
J1
GPIO1
J2
GPIO2
J3
GPIO3
J4
GPIO4
J5
GPIO5
J6
GPIO6
J7
GPIO7
J8
GPIO8
D8
LED
D7
LED
D6
LED
D5
LED
D4
LED
D3
LED
D2
LED
D1
LED
R8
80
R7
80
R6
80
R5
80
R4
80
R3
80
R2
80
R1
80
Vcc = 3.3V
Vf = 2.9V, If = 5mA
(3.3−2.9) / 0.005 = 80Ω
阿南高専ロボット研究部
Sheet: /
File: GPIOBoard.kicad_sch
Title: GPIO Board
Size: A4
Date: 2025−07−16
Rev: ver1.3
KiCad E.D.A. 9.0.3
Id: 1/4

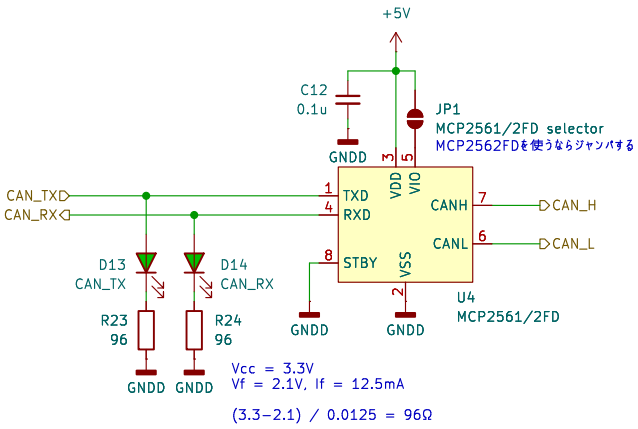

阿南高専ロボット研究部

Sheet: /CAN/
File: GPIOBoard_CAN.kicad_sch

Title: GPIO Board / CAN

Size: A4	Date: 2025−07−16	Rev: ver1.3
KiCad E.D.A. 9.0.3		Id: 4/4

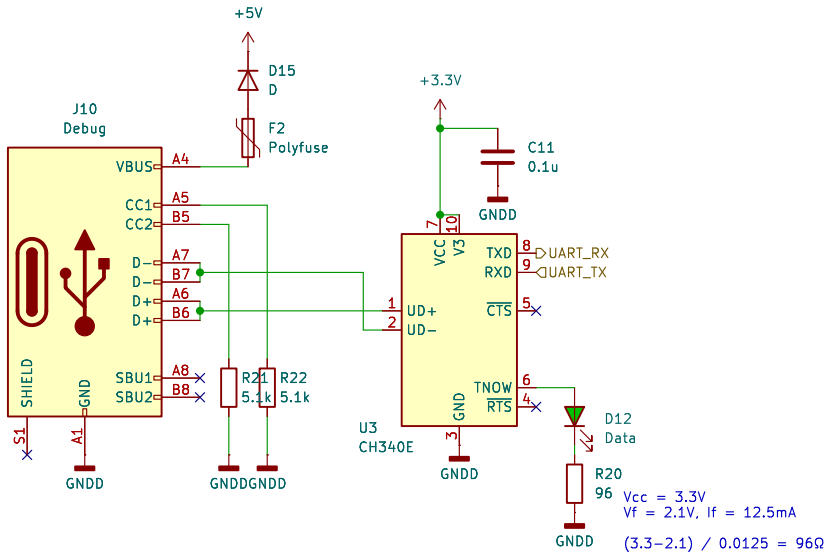

阿南高専ロボット研究部

Sheet: /USB−UART/

File: GPIOBoard_USB−UART.kicad_sch

Title: GPIO Board / USB−UART

Size: A4	Date: 2025−07−16	Rev: ver1.3
KiCad E.D.A. 9.0.3		Id: 3/4

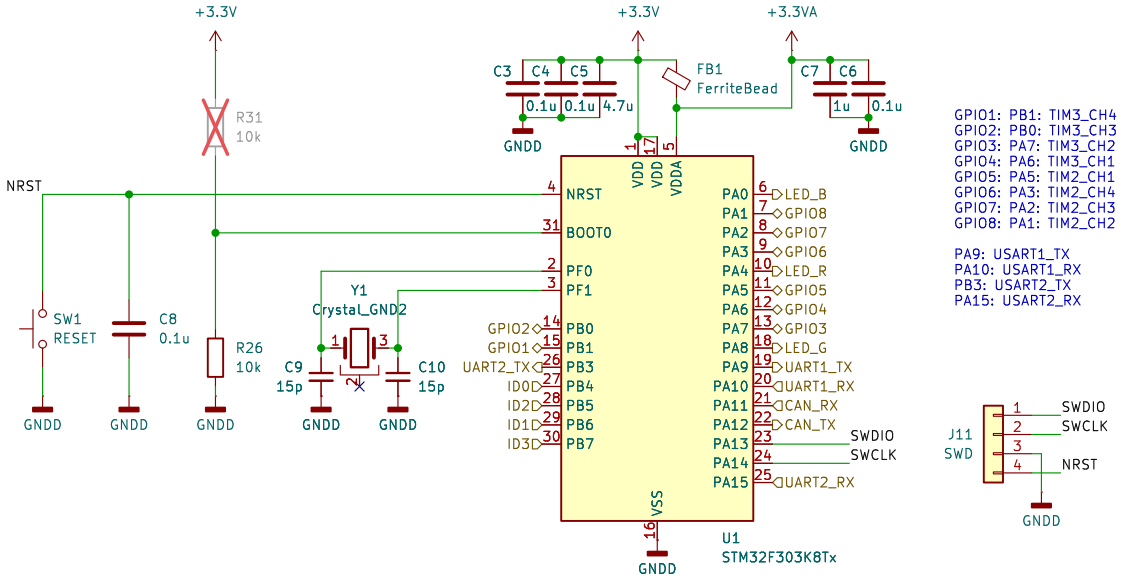

阿南高専ロボット研究部

Sheet: /MCU/

File: GPIOBoard_MCU.kicad_sch

Title: GPIO Board / MCU

Size: A4	Date: 2025-07-16	Rev: ver1.3
KiCad E.D.A. 9.0.3		Id: 2/4