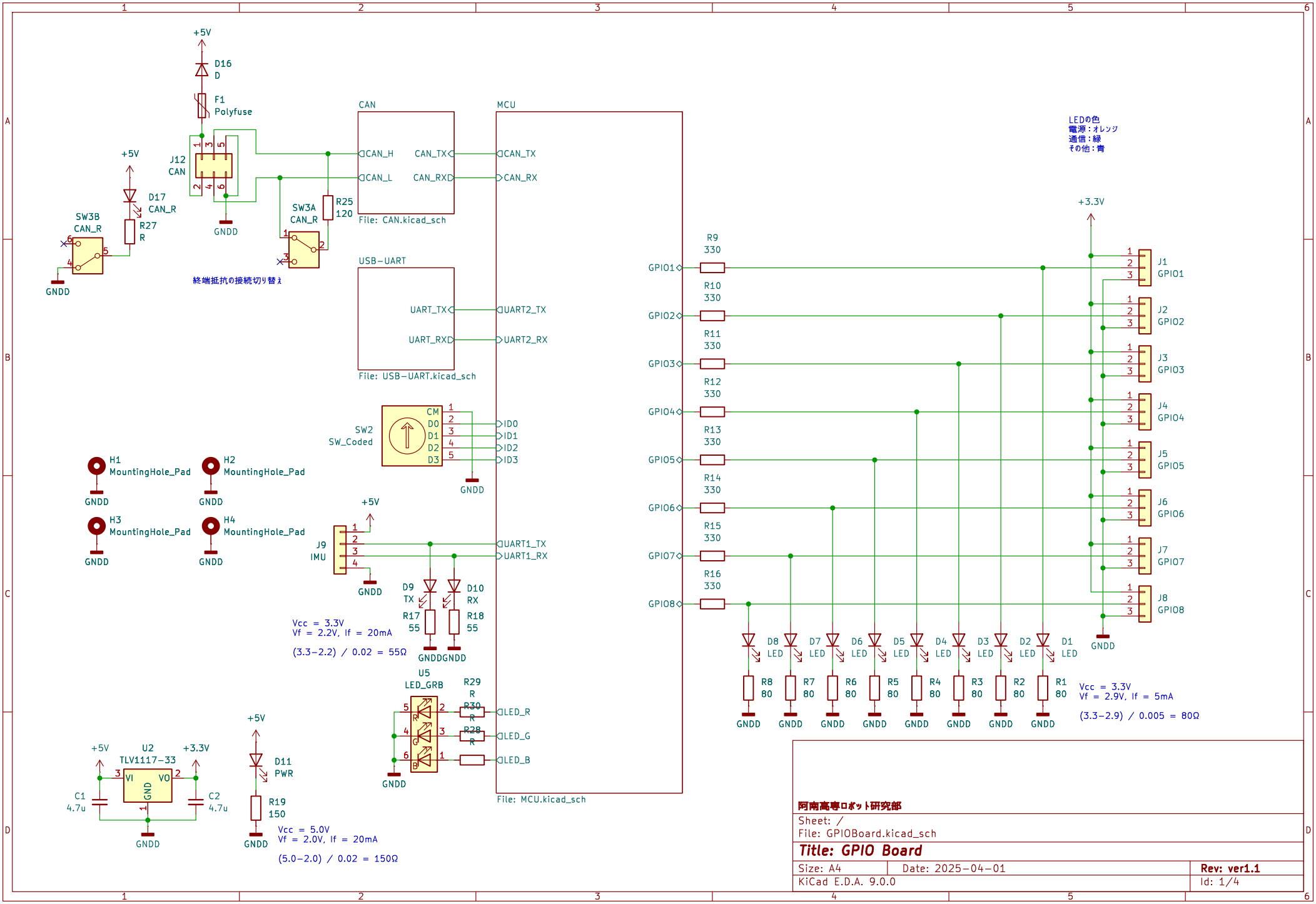

阿南高専ロボット研究部

Sheet: /

File: GPIOBoard.kicad_sch

Title: GPIO Board

Size: A4	Date: 2025-04-01	Rev: ver1.1
KiCad E.D.A. 9.0.0		Id: 1/4

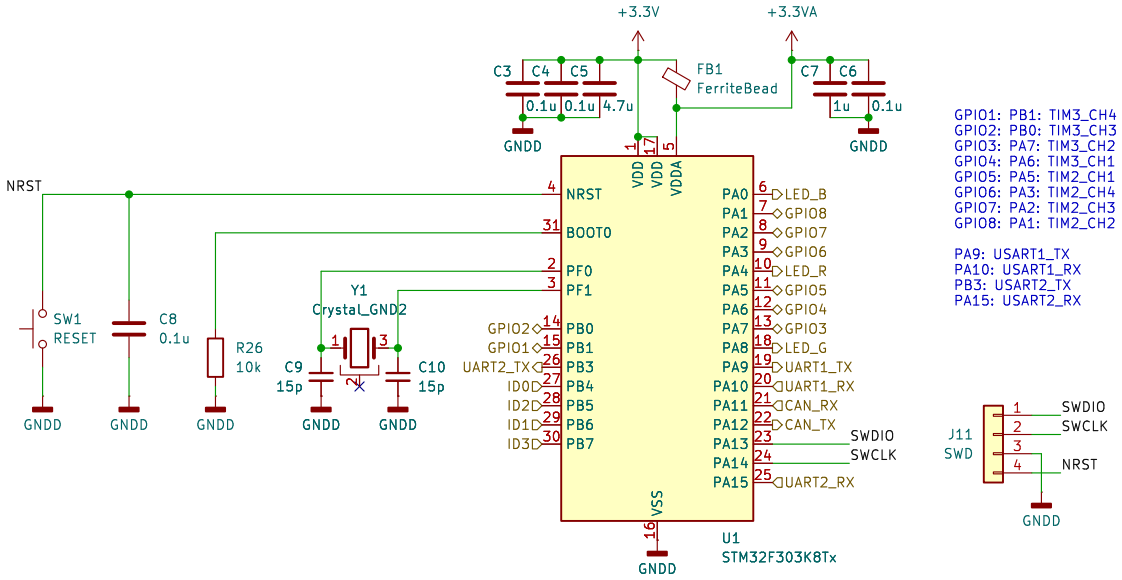

GPIO1: PB1: TIM3_CH4
GPIO2: PB0: TIM3_CH3
GPIO3: PA7: TIM3_CH2
GPIO4: PA6: TIM3_CH1
GPIO5: PA5: TIM2_CH1
GPIO6: PA3: TIM2_CH4
GPIO7: PA2: TIM2_CH3
GPIO8: PA1: TIM2_CH2

PA9: USART1_TX
PA10: USART1_RX
PB3: USART2_TX
PA15: USART2_RX

Sheet: /MCU/
File: MCU.kicad_sch

Title:

Size: A4	Date:	Rev:
KiCad E.D.A. 9.0.0		Id: 2/4

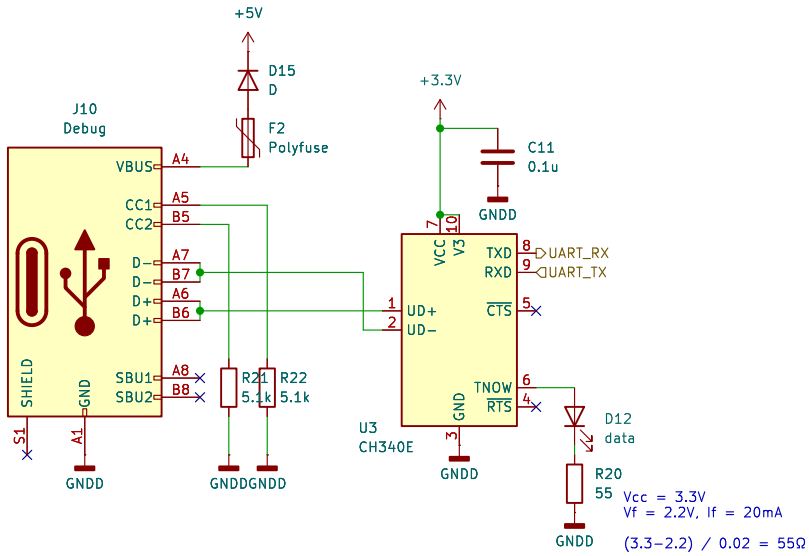

Sheet: /USB−UART/
File: USB−UART.kicad_sch

Title:

Size: A4	Date:	Rev:
KiCad E.D.A. 9.0.0		Id: 3/4

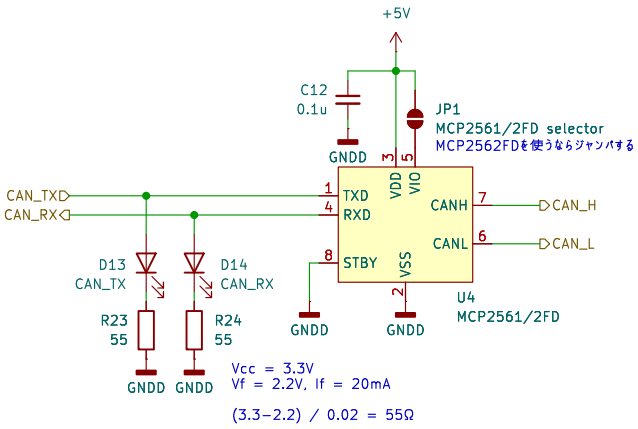

Sheet: /CAN/
File: CAN.kicad_sch

Title:

Size: A4	Date:	Rev:
KiCad E.D.A. 9.0.0		Id: 4/4