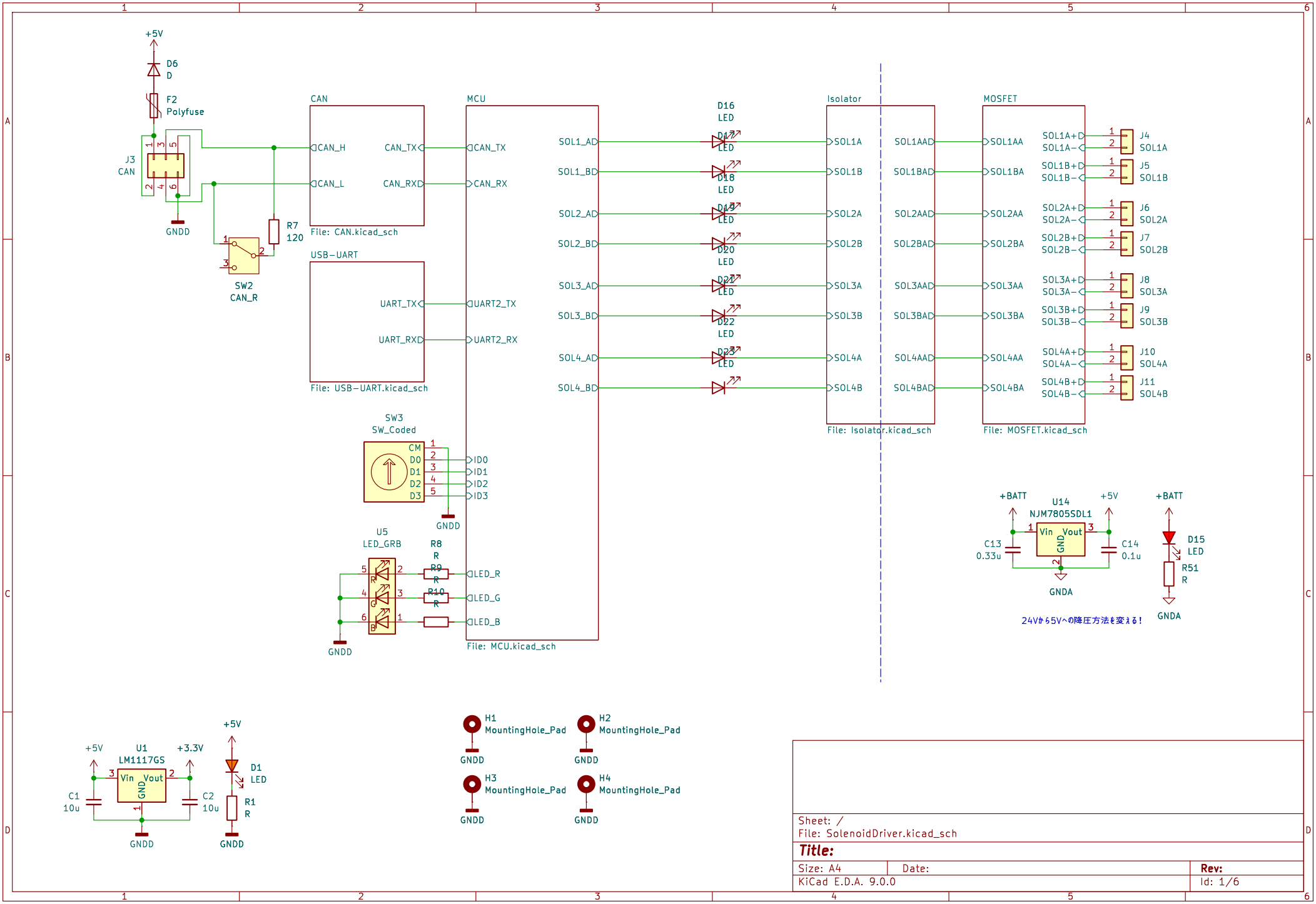

Sheet: /
File: SolenoidDriver.kicad_sch

Title:

Size: A4	Date:	Rev:
KiCad E.D.A. 9.0.0		Id: 1/6

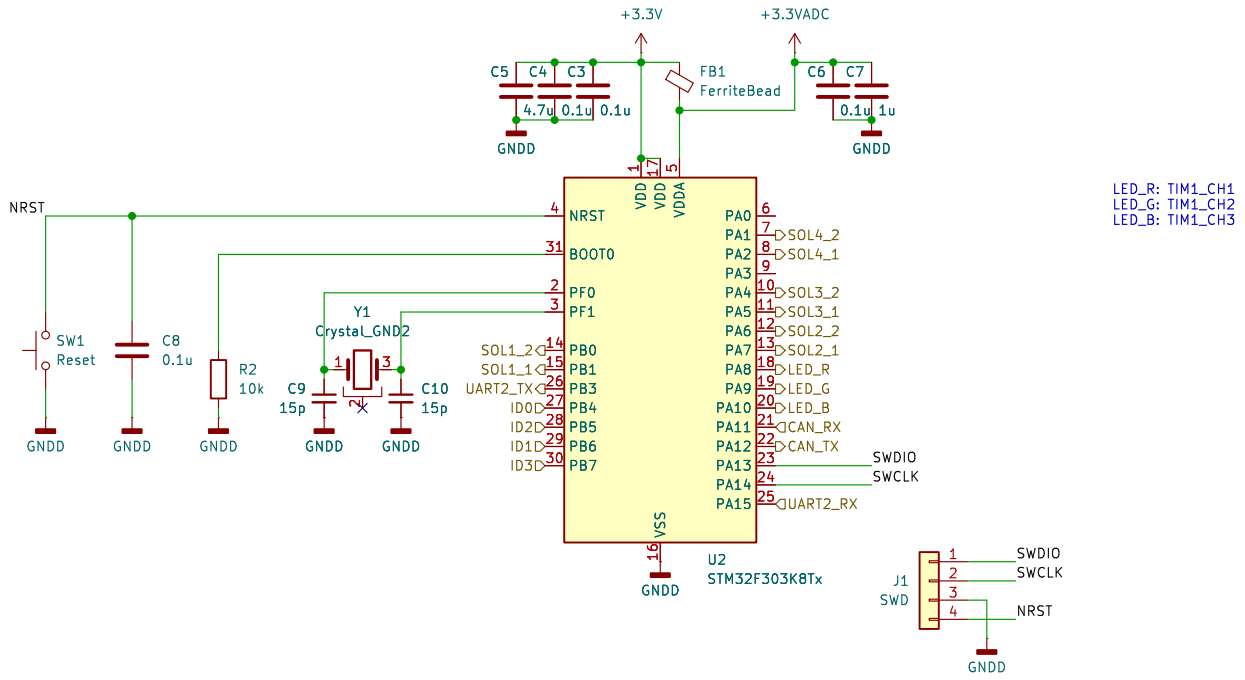

Sheet: /MCU/
File: MCU.kicad_sch

Title:

Size: A4	Date:	Rev:
KiCad E.D.A. 9.0.0		Id: 2/6

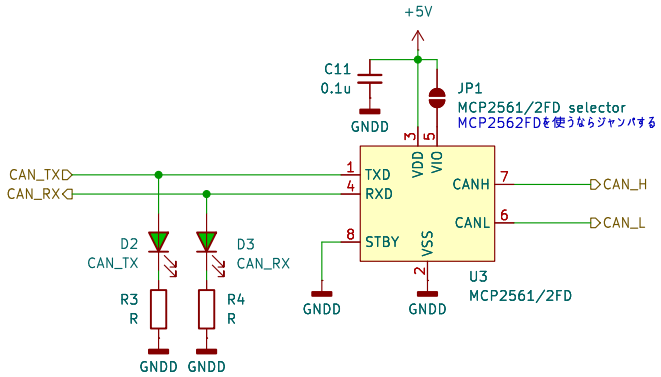

Sheet: /CAN/
File: CAN.kicad_sch

Title:

Size: A4	Date:	Rev:
KiCad E.D.A. 9.0.0		Id: 3/6

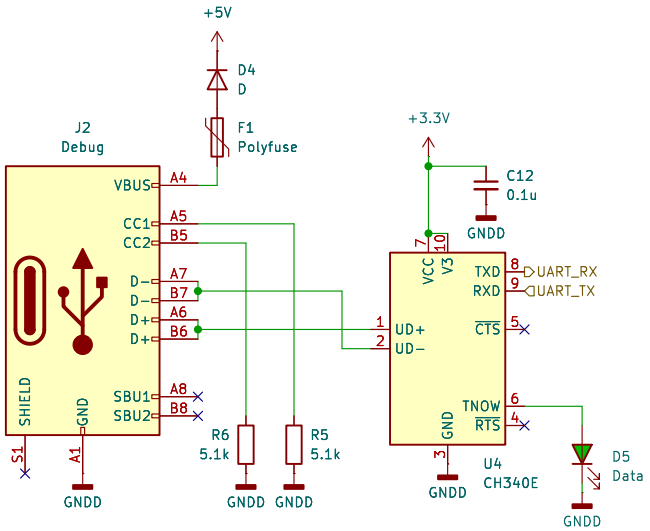

Sheet: /USB−UART/
File: USB−UART.kicad_sch

Title:

Size: A4	Date:	Rev:
KiCad E.D.A. 9.0.0		Id: 4/6

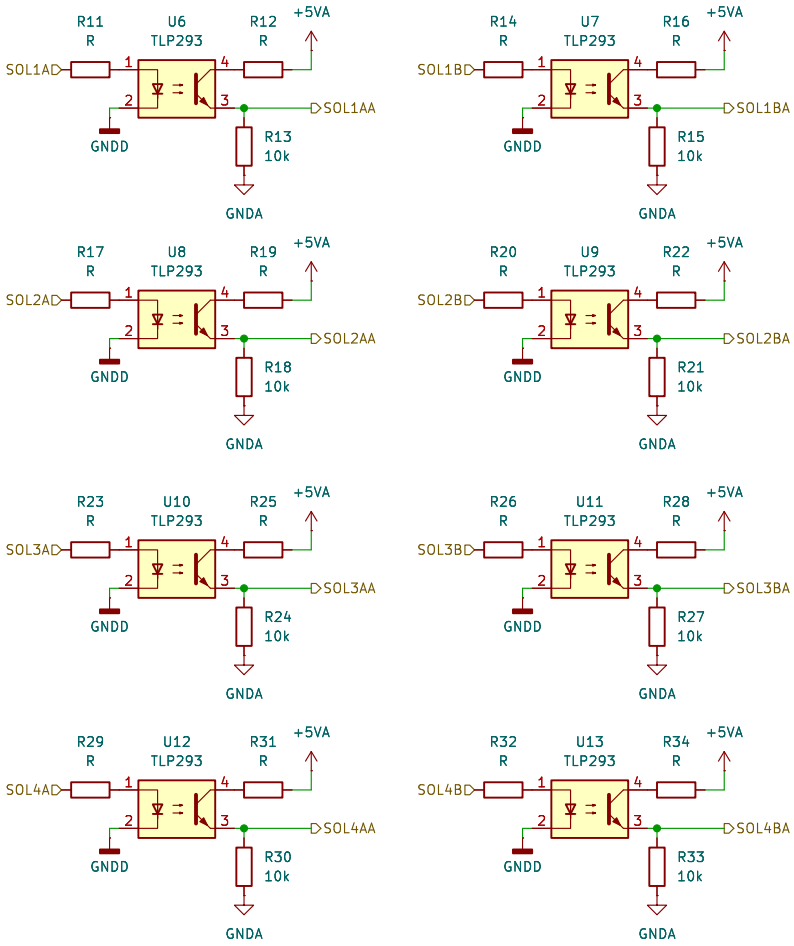

Sheet: /Isolator/
File: Isolator.kicad_sch

Title:

Size: A4	Date:	**Rev:**
KiCad E.D.A. 9.0.0		Id: 5/6

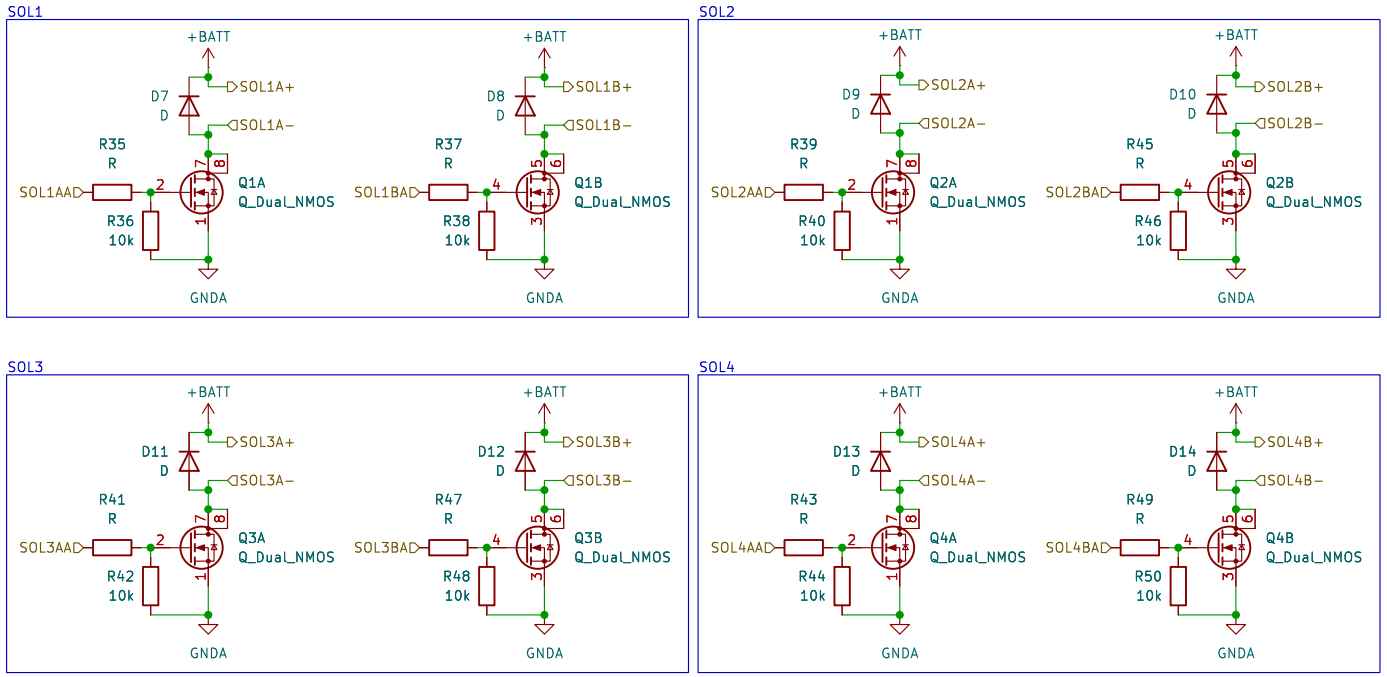

Sheet: /MOSFET/
File: MOSFET.kicad_sch

Title:

Size: A4	Date:	**Rev:**
KiCad E.D.A. 9.0.0		Id: 6/6