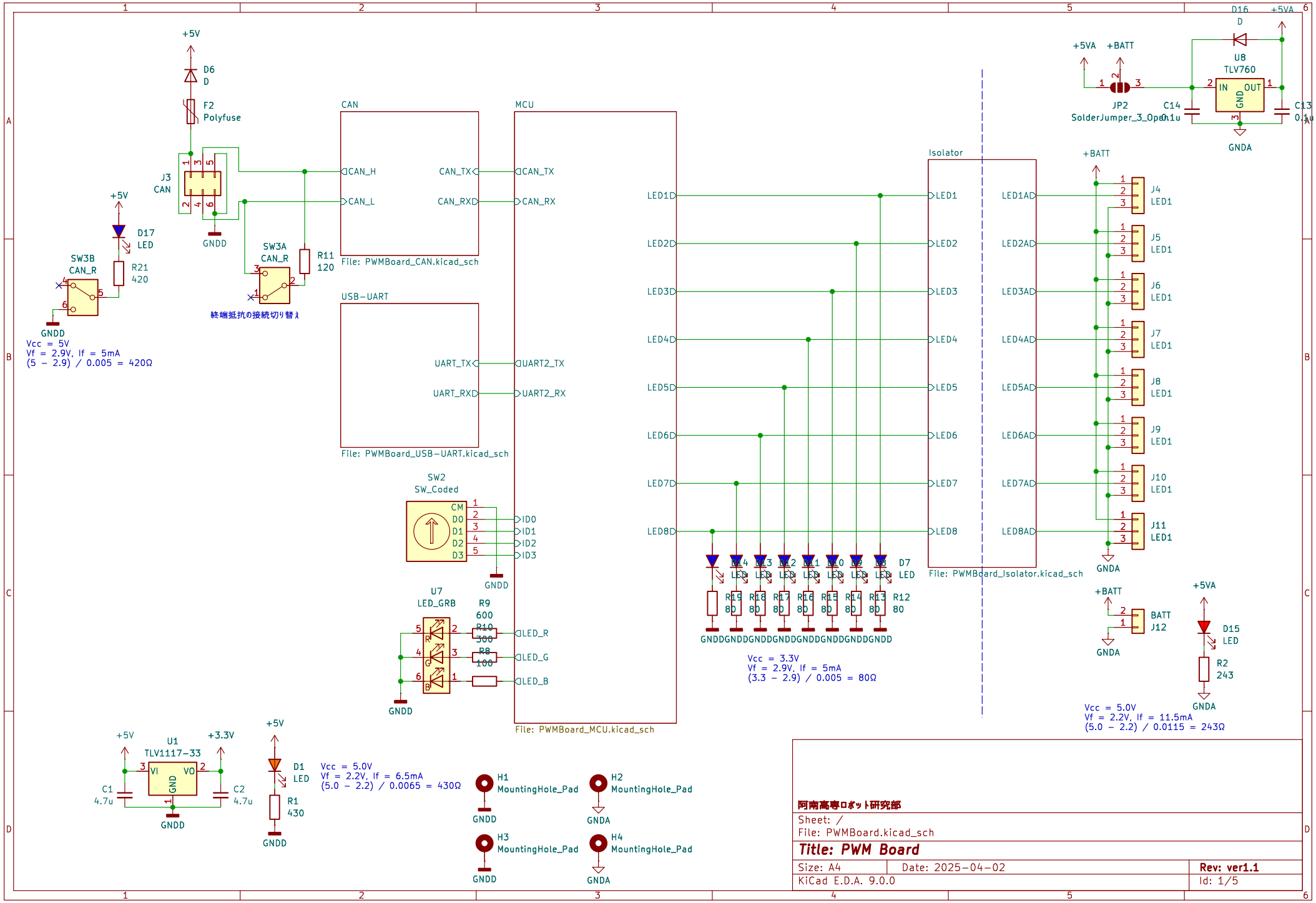
+5V
D6
D
F2
Polyfuse
J3
CAN
GNDD
CAN
CAN_H
CAN_L
CAN_TX
CAN_RX
File: PWMBoard_CAN.kicad_sch
MCU
CAN_TX
CAN_RX
+5V
D17
LED
R21
420
SW3B
CAN_R
GNDD
Vcc = 5V
Vf = 2.9V, If = 5mA
(5 − 2.9) / 0.005 = 420Ω
SW3A
CAN_R
R11
120
終端抵抗の接続切り替え
USB−UART
UART_TX
UART_RX
UART2_TX
UART2_RX
File: PWMBoard_USB−UART.kicad_sch
SW2
SW_Coded
CM
D0
D1
D2
D3
ID0
ID1
ID2
ID3
GNDD
U7
LED_GRB
R9
600
R10
300
R8
100
LED_R
LED_G
LED_B
GNDD
File: PWMBoard_MCU.kicad_sch
LED1
LED2
LED3
LED4
LED5
LED6
LED7
LED8
D14
D13
D12
D11
D10
D9
D8
D7
LED
R19
80
R18
80
R17
80
R16
80
R15
80
R14
80
R13
80
R12
80
GNDD
Vcc = 3.3V
Vf = 2.9V, If = 5mA
(3.3 − 2.9) / 0.005 = 80Ω
Isolator
LED1
LED2
LED3
LED4
LED5
LED6
LED7
LED8
LED1A
LED2A
LED3A
LED4A
LED5A
LED6A
LED7A
LED8A
File: PWMBoard_Isolator.kicad_sch
+BATT
J4
LED1
J5
LED1
J6
LED1
J7
LED1
J8
LED1
J9
LED1
J10
LED1
J11
LED1
GNDA
+5VA
+BATT
JP2
SolderJumper_3_Open
C14
0.1u
D16
D
U8
TLV760
IN
OUT
GND
C13
0.1u
GNDA
+BATT
BATT
J12
GNDA
+5VA
D15
LED
R2
243
GNDA
Vcc = 5.0V
Vf = 2.2V, If = 11.5mA
(5.0 − 2.2) / 0.0115 = 243Ω
+5V
U1
TLV1117−33
+3.3V
VI
VO
GND
C1
4.7u
C2
4.7u
GNDD
+5V
D1
LED
R1
430
GNDD
Vcc = 5.0V
Vf = 2.2V, If = 6.5mA
(5.0 − 2.2) / 0.0065 = 430Ω
H1
MountingHole_Pad
GNDD
H2
MountingHole_Pad
GNDA
H3
MountingHole_Pad
GNDD
H4
MountingHole_Pad
GNDA
阿南高専ロボット研究部
Sheet: /
File: PWMBoard.kicad_sch
Title: PWM Board
Size: A4
Date: 2025−04−02
Rev: ver1.1
KiCad E.D.A. 9.0.0
Id: 1/5

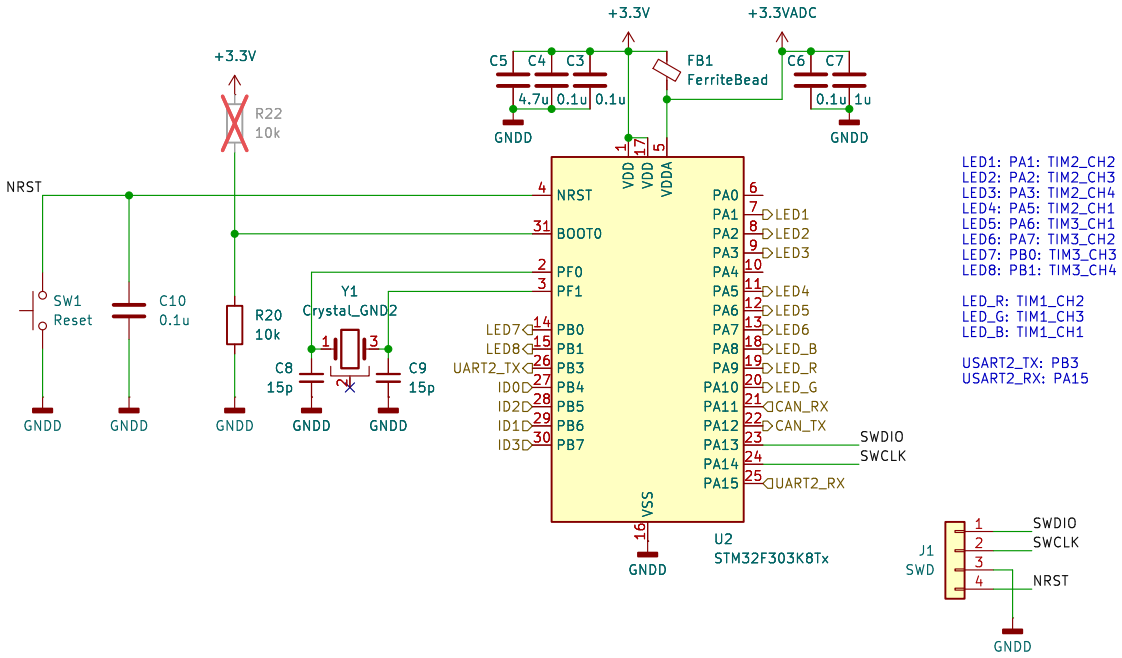


阿南高専ロボット研究部

Sheet: /MCU/
File: PWMBoard_MCU.kicad_sch

**Title: PWM Board / MCU**

| | | |
|---|---|---|
| Size: A4 | Date: 2025-04-02 | Rev: ver1.1 |
| KiCad E.D.A. 9.0.0 | | Id: 2/5 |

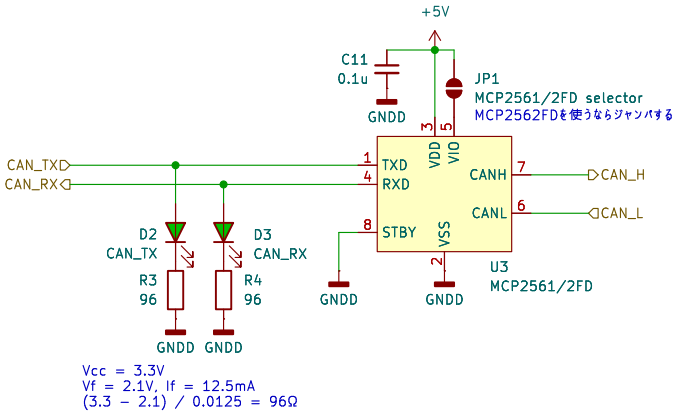


阿南高専ロボット研究部

Sheet: /CAN/
File: PWMBoard_CAN.kicad_sch

**Title: PWM Board / CAN**

| | | |
|---|---|---|
| Size: A4 | Date: 2025-04-02 | Rev: ver1.1 |
| KiCad E.D.A. 9.0.0 | | Id: 3/5 |

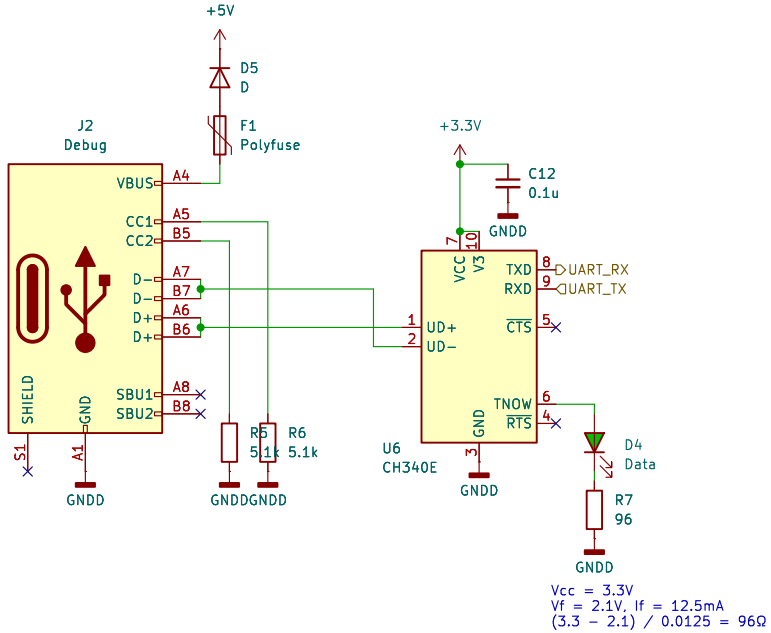


阿南高専ロボット研究部

Sheet: /USB−UART/

File: PWMBoard_USB−UART.kicad_sch

**Title: PWM Board / USB−UART**

| | | |
|---|---|---|
| Size: A4 | Date: 2025−04−02 | Rev: ver1.1 |
| KiCad E.D.A. 9.0.0 | | Id: 4/5 |

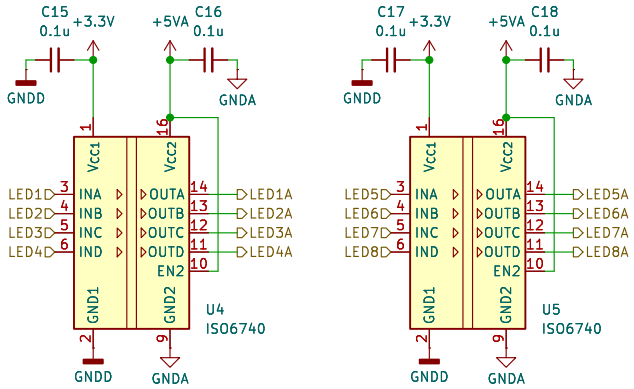


阿南高専ロボット研究部

Sheet: /Isolator/
File: PWMBoard_Isolator.kicad_sch

**Title: PWM Board / Isolator**

| | | |
|---|---|---|
| Size: A4 | Date: 2025-04-02 | Rev: ver1.1 |
| KiCad E.D.A. 9.0.0 | | Id: 5/5 |