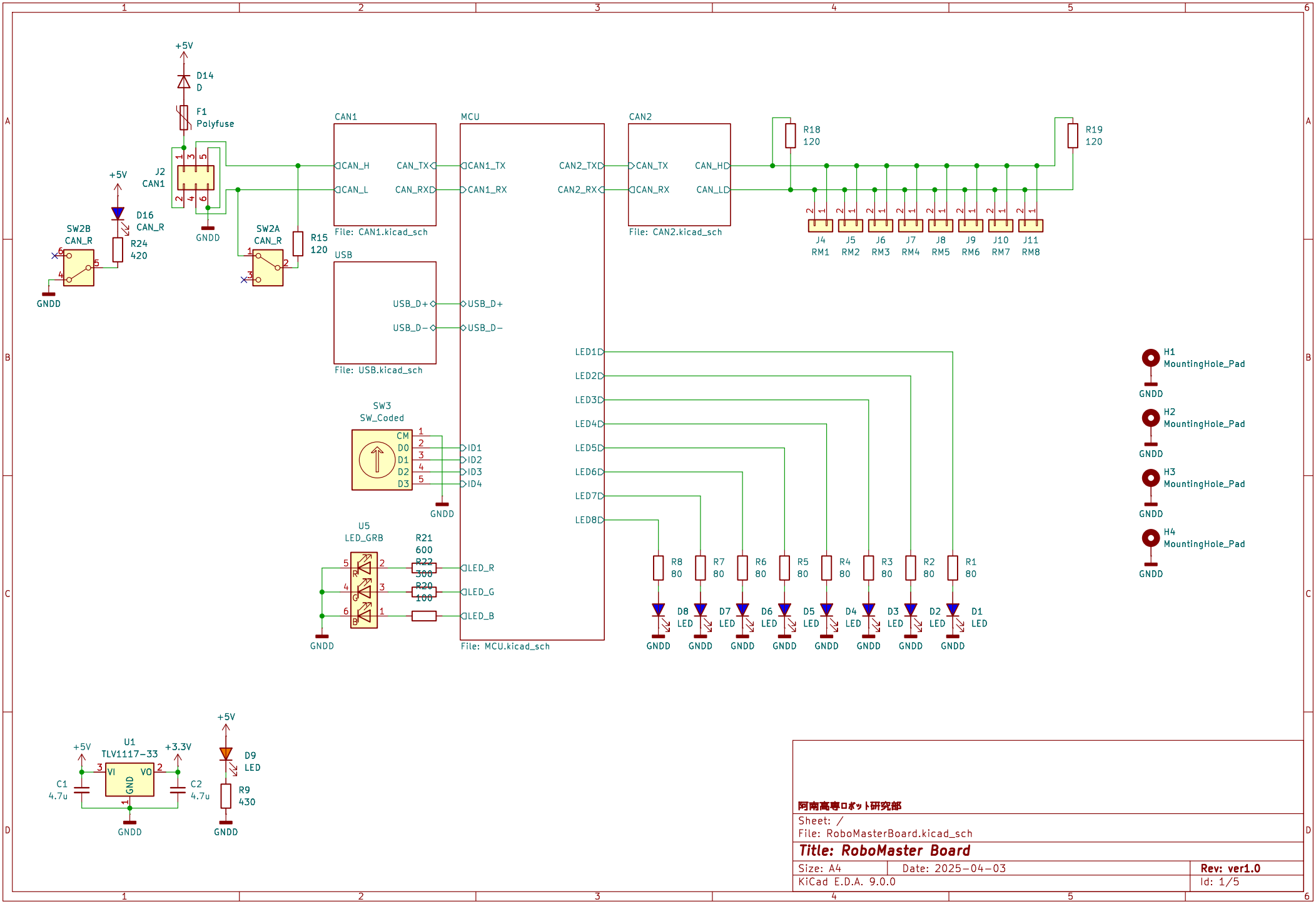


阿南高専ロボット研究部

Sheet: /

File: RoboMasterBoard.kicad_sch

**Title: RoboMaster Board**

| | | |
|---|---|---|
| Size: A4 | Date: 2025-04-03 | Rev: ver1.0 |
| KiCad E.D.A. 9.0.0 | | Id: 1/5 |

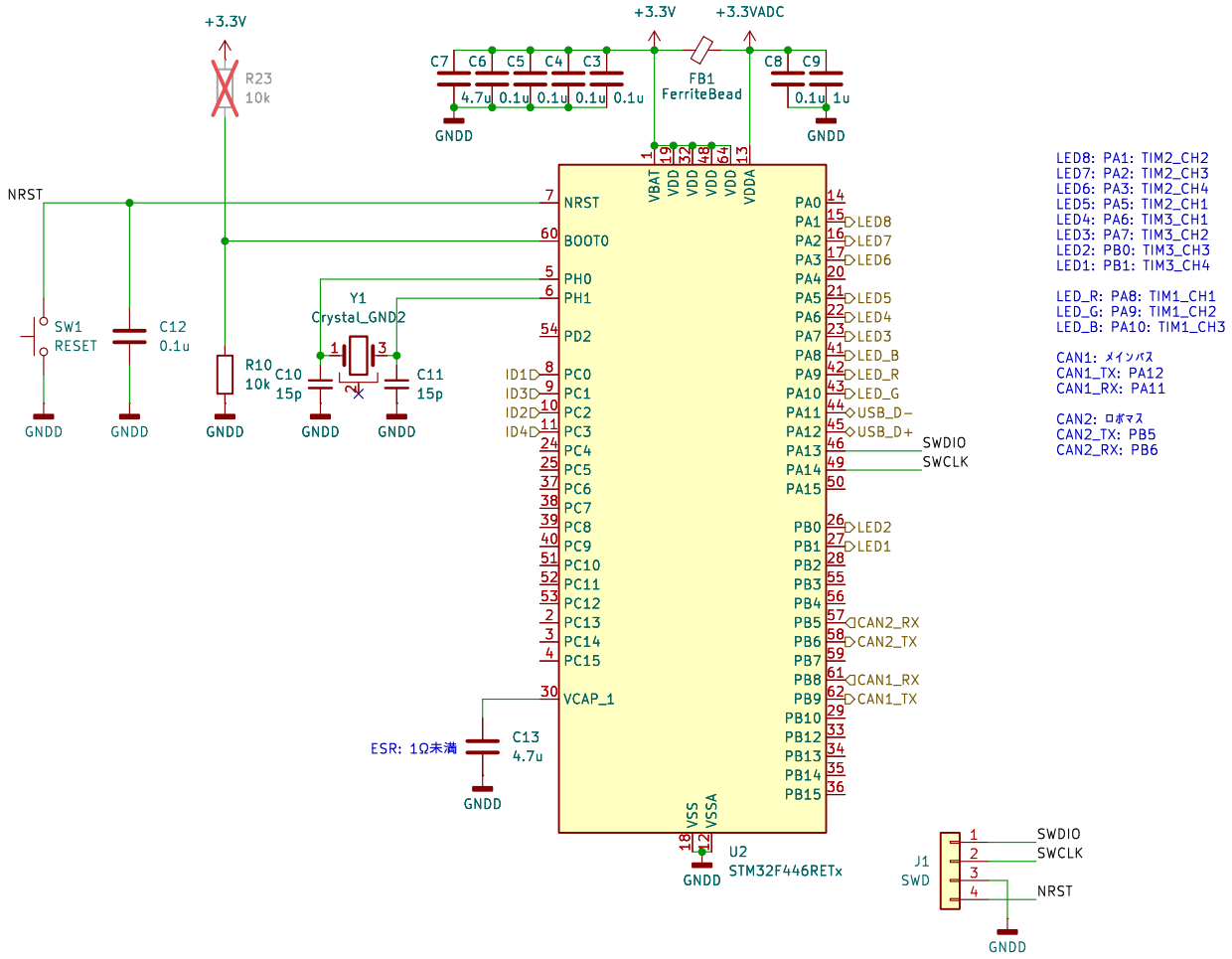


LED8: PA1: TIM2_CH2
LED7: PA2: TIM2_CH3
LED6: PA3: TIM2_CH4
LED5: PA5: TIM2_CH1
LED4: PA6: TIM3_CH1
LED3: PA7: TIM3_CH2
LED2: PB0: TIM3_CH3
LED1: PB1: TIM3_CH4

LED_R: PA8: TIM1_CH1
LED_G: PA9: TIM1_CH2
LED_B: PA10: TIM1_CH3

CAN1: メインバス
CAN1_TX: PA12
CAN1_RX: PA11

CAN2: ロボマス
CAN2_TX: PB5
CAN2_RX: PB6

阿南高専ロボット研究部

Sheet: /MCU/
File: MCU.kicad_sch

**Title: RoboMaster Board / MCU**

| | | |
|---|---|---|
| Size: A4 | Date: 2025-04-03 | Rev: ver1.0 |
| KiCad E.D.A. 9.0.0 | | Id: 2/5 |

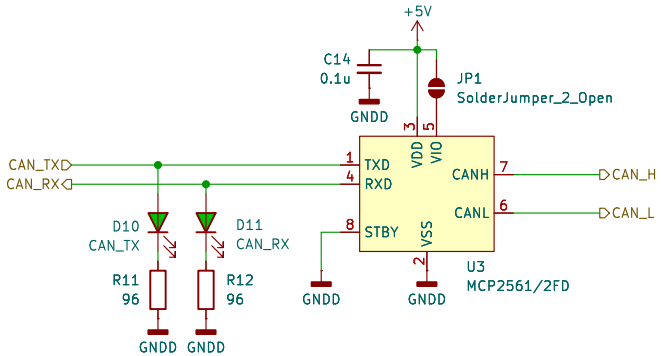


阿南高専ロボット研究部

Sheet: /CAN1/
File: CAN1.kicad_sch

**Title: RoboMaster Board / CAN1**

| | | |
|---|---|---|
| Size: A4 | Date: 2025-04-03 | Rev: ver1.0 |
| KiCad E.D.A. 9.0.0 | | Id: 3/5 |

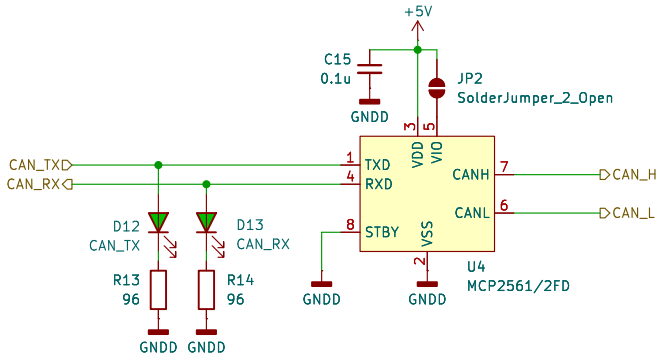


阿南高専ロボット研究部

Sheet: /CAN2/
File: CAN2.kicad_sch

**Title: RoboMaster Board / CAN2**

| | | |
|---|---|---|
| Size: A4 | Date: 2025-04-03 | Rev: ver1.0 |
| KiCad E.D.A. 9.0.0 | | Id: 4/5 |

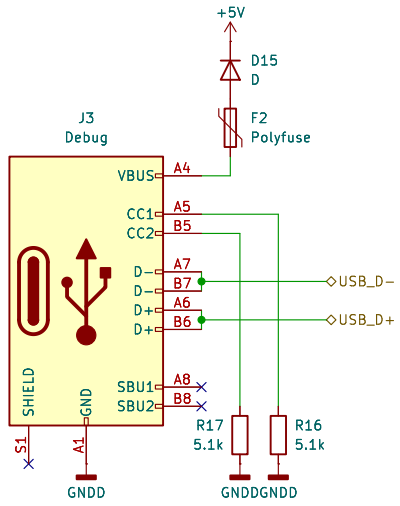


阿南高専ロボット研究部

Sheet: /USB/
File: USB.kicad_sch

**Title: RoboMaster Board / USB**

| | | |
|---|---|---|
| Size: A4 | Date: 2025-04-03 | Rev: ver1.0 |
| KiCad E.D.A. 9.0.0 | | Id: 5/5 |