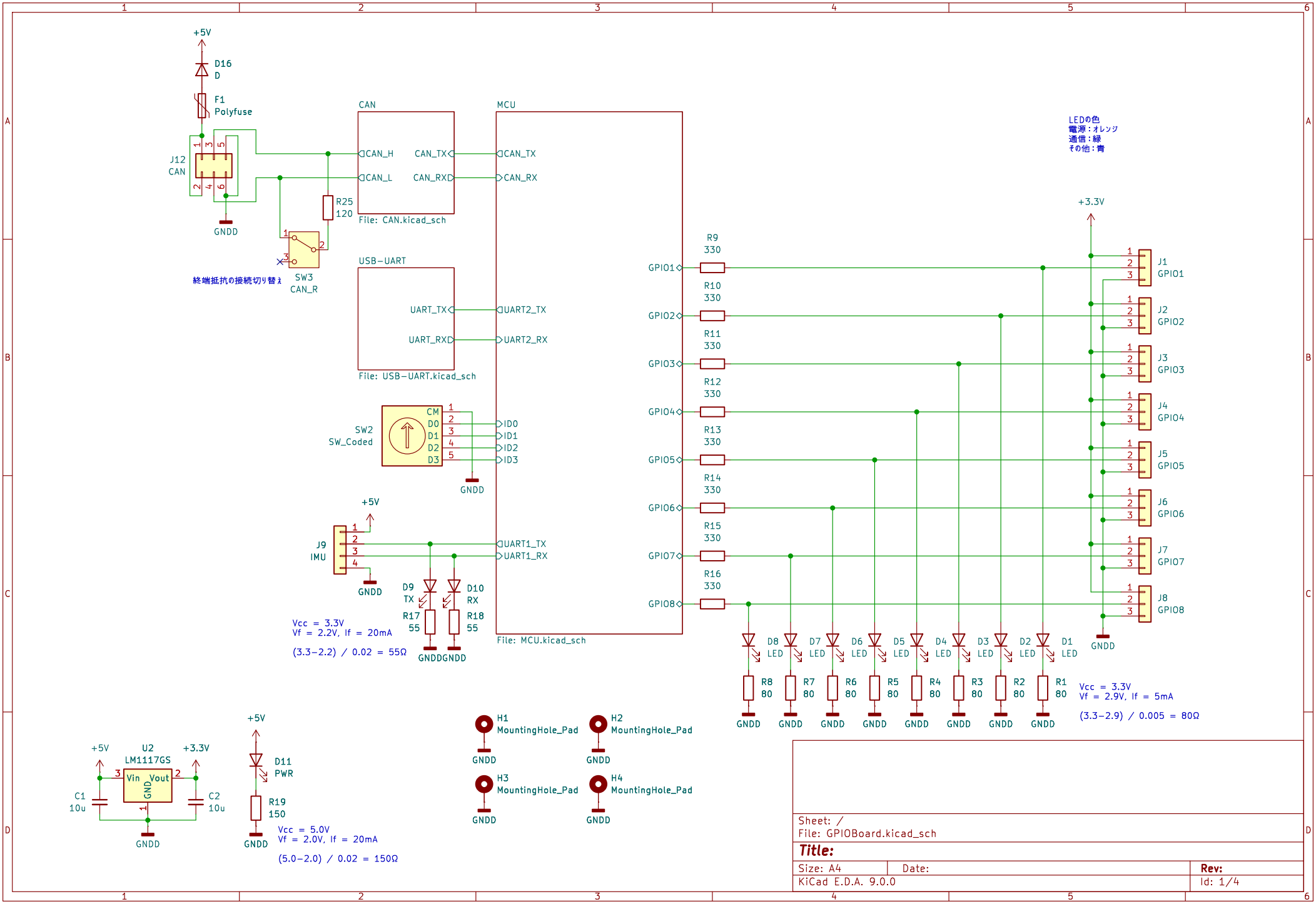
+5V
D16
D
F1
Polyfuse
J12
CAN
GNDD
CAN
CAN_H
CAN_L
CAN_TX
CAN_RX
File: CAN.kicad_sch
R25
120
SW3
CAN_R
終端抵抗の接続切り替え
MCU
CAN_TX
CAN_RX
USB-UART
UART_TX
UART_RX
UART2_TX
UART2_RX
File: USB-UART.kicad_sch
SW2
SW_Coded
CM
D0
D1
D2
D3
ID0
ID1
ID2
ID3
J9
IMU
UART1_TX
UART1_RX
D9
TX
D10
RX
R17
55
R18
55
Vcc = 3.3V
Vf = 2.2V, If = 20mA
(3.3-2.2) / 0.02 = 55Ω
File: MCU.kicad_sch
GPIO1
GPIO2
GPIO3
GPIO4
GPIO5
GPIO6
GPIO7
GPIO8
R9
330
R10
330
R11
330
R12
330
R13
330
R14
330
R15
330
R16
330
LEDの色
電源：オレンジ
通信：緑
その他：青
+3.3V
J1
GPIO1
J2
GPIO2
J3
GPIO3
J4
GPIO4
J5
GPIO5
J6
GPIO6
J7
GPIO7
J8
GPIO8
D8
LED
D7
LED
D6
LED
D5
LED
D4
LED
D3
LED
D2
LED
D1
LED
R8
80
R7
80
R6
80
R5
80
R4
80
R3
80
R2
80
R1
80
Vcc = 3.3V
Vf = 2.9V, If = 5mA
(3.3-2.9) / 0.005 = 80Ω
U2
LM1117GS
Vin
Vout
GND
C1
10u
C2
10u
+3.3V
D11
PWR
R19
150
Vcc = 5.0V
Vf = 2.0V, If = 20mA
(5.0-2.0) / 0.02 = 150Ω
H1
MountingHole_Pad
H2
MountingHole_Pad
H3
MountingHole_Pad
H4
MountingHole_Pad
Sheet: /
File: GPIOBoard.kicad_sch
Title:
Size: A4
Date:
Rev:
KiCad E.D.A. 9.0.0
Id: 1/4

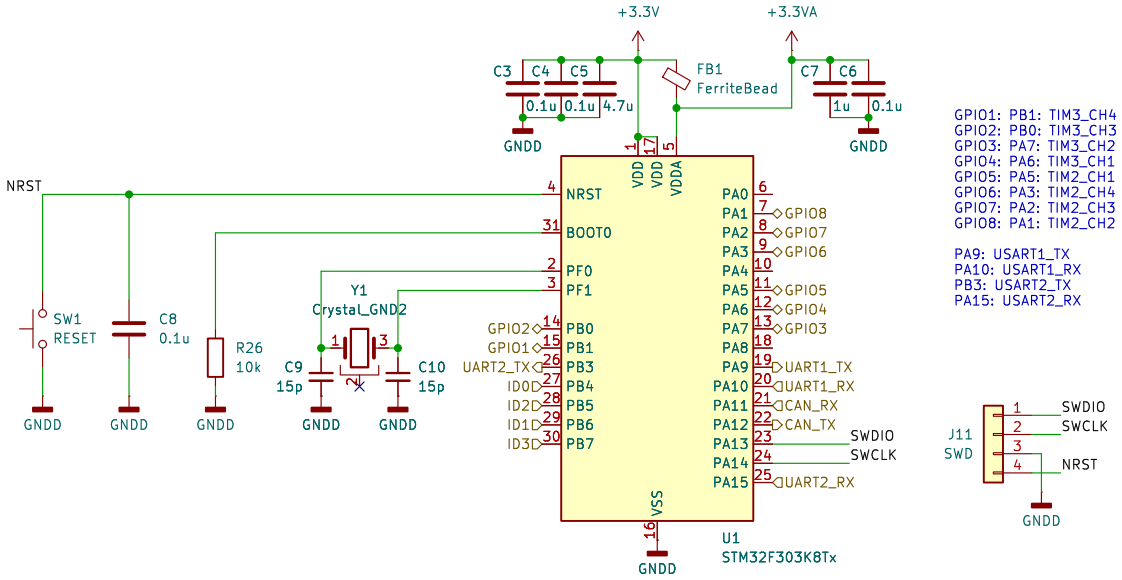

GPIO1: PB1: TIM3_CH4
GPIO2: PB0: TIM3_CH3
GPIO3: PA7: TIM3_CH2
GPIO4: PA6: TIM3_CH1
GPIO5: PA5: TIM2_CH1
GPIO6: PA3: TIM2_CH4
GPIO7: PA2: TIM2_CH3
GPIO8: PA1: TIM2_CH2

PA9: USART1_TX
PA10: USART1_RX
PB3: USART2_TX
PA15: USART2_RX

Sheet: /MCU/
File: MCU.kicad_sch

Title:

Size: A4	Date:	**Rev:**
KiCad E.D.A. 9.0.0		Id: 2/4

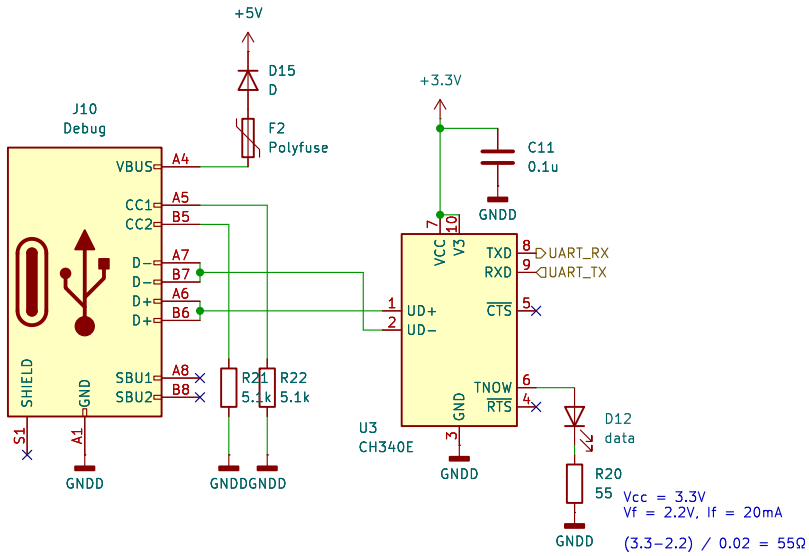

Sheet: /USB−UART/
File: USB−UART.kicad_sch

Title:

Size: A4	Date:	Rev:
KiCad E.D.A. 9.0.0		Id: 3/4

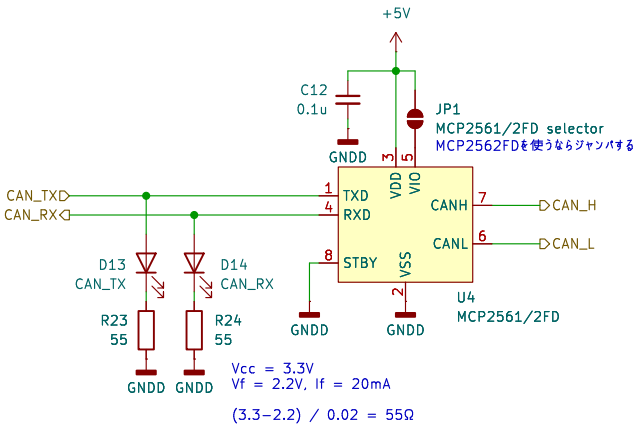

Sheet: /CAN/
File: CAN.kicad_sch

Title:

Size: A4	Date:	Rev:
KiCad E.D.A. 9.0.0		Id: 4/4