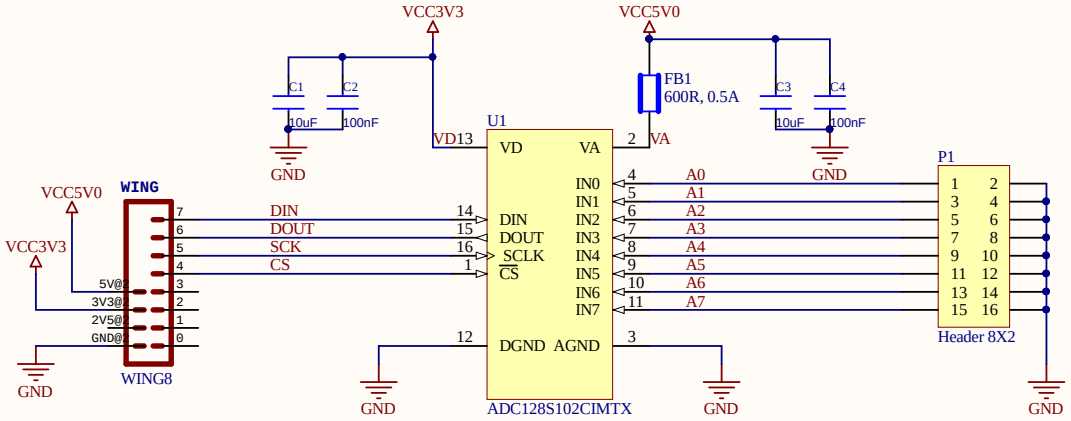

Title *POSEDGE ADC Wing*			*www.posedge.ir* *TORANJ Inc.* *Isfahan Science and Technology Town, Isfahan* *IRAN*
Size: A4	Number:	Revision: A	
Date: 9/27/2016		Sheet of	

به طراحی دیجیتال لبخند بزن!