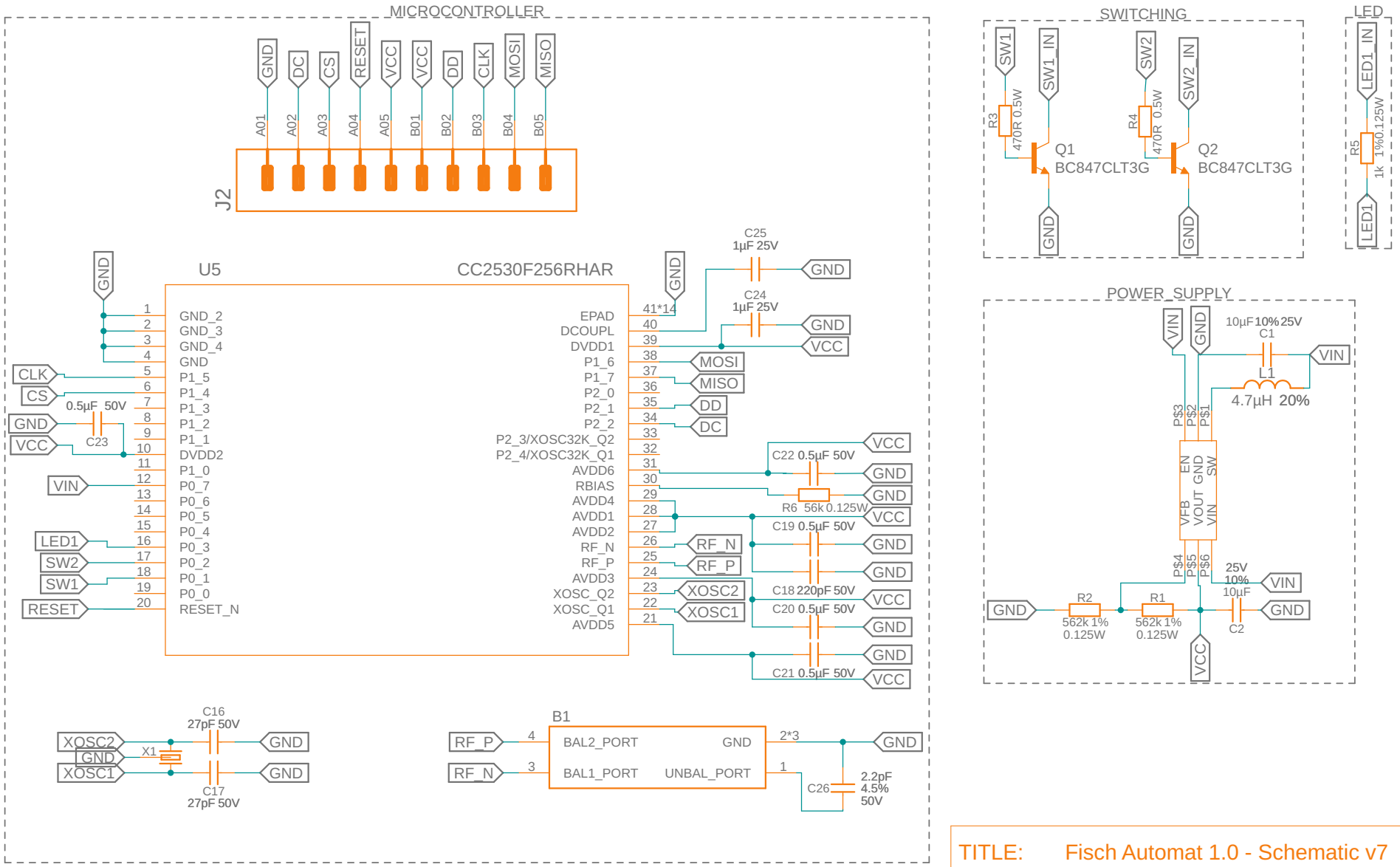

TITLE:	Fisch Automat 1.0 - Schematic v7
AUTHOR:	MHaid
NOTE: More information: https://github.com/mhaid/zigbee_fishfeeder/	REV: 3
DATE: 25.03.2023 18:15	SHEET: 1/1