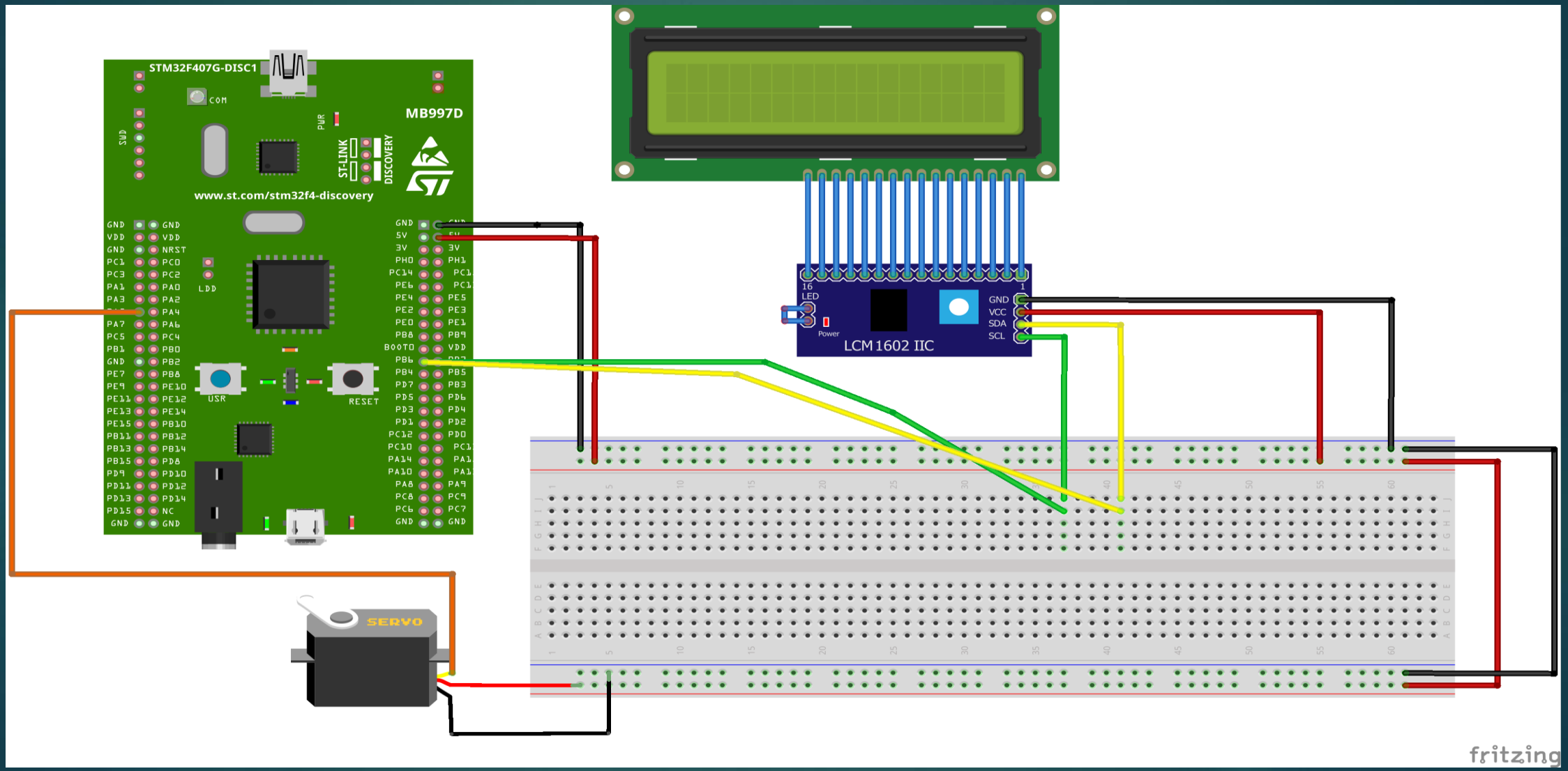
STM32F407G-DISC1
MB997D
www.st.com/stm32f4-discovery
ST-LINK
DISCOVERY
USR
RESET
LCM 1602 IIC
GND
VCC
SDA
SCL
LED
Power
SERVO
fritzing