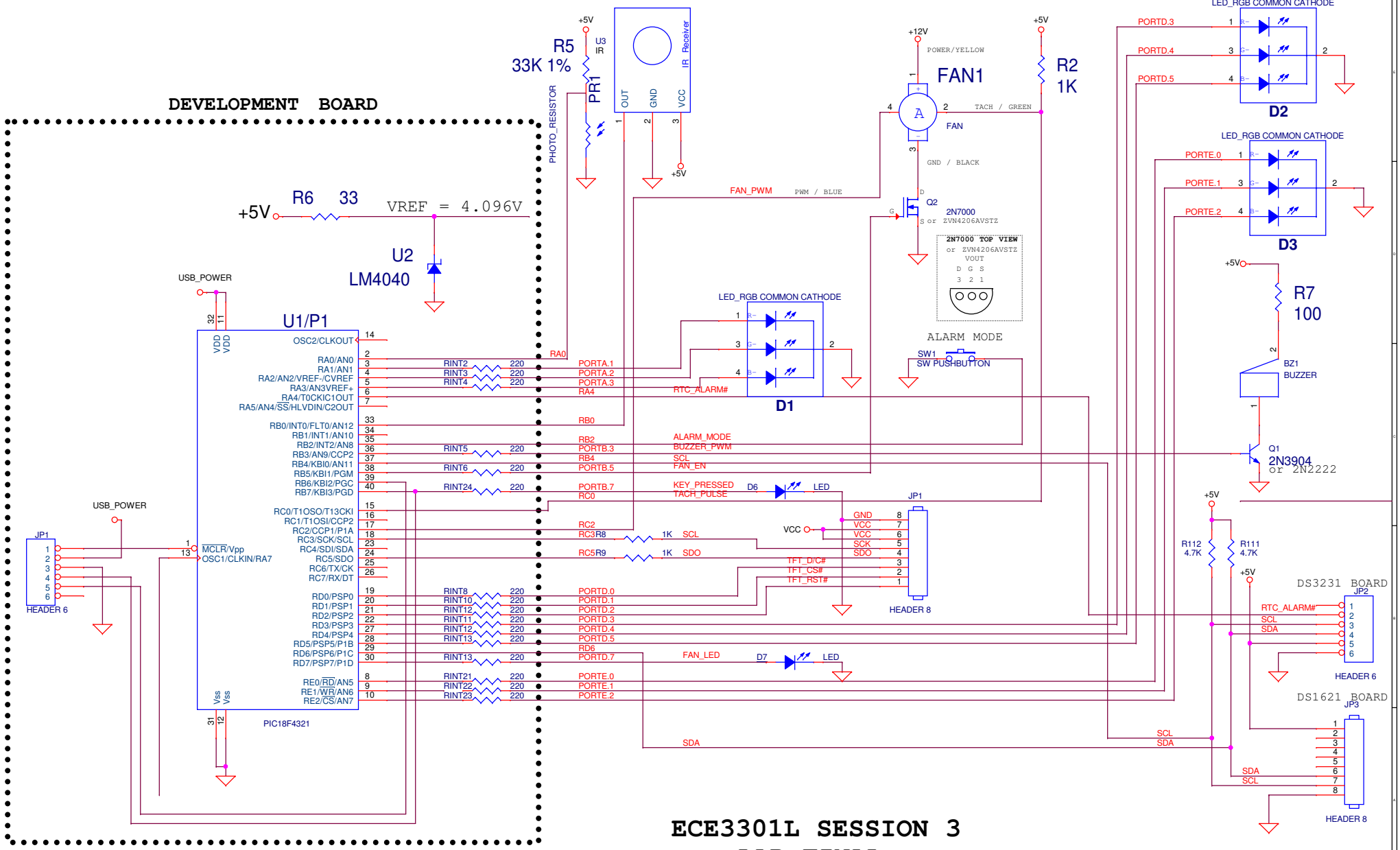
DEVELOPMENT BOARD
+5V
R6 33
VREF = 4.096V
U2
LM4040
USB_POWER
U1/P1
PIC18F4321
JP1
HEADER 6
R5
33K 1%
PHOTO_RESISTOR
PR1
U3
IR
IR Receiver
OUT
GND
VCC
+12V
POWER/YELLOW
FAN1
TACH / GREEN
FAN
GND / BLACK
FAN_PWM
PWM / BLUE
Q2
2N7000
or ZVN4206AVSTZ
2N7000 TOP VIEW
R2
1K
LED_RGB COMMON CATHODE
D1
D2
D3
ALARM MODE
SW1
SW PUSHBUTTON
R7
100
BZ1
BUZZER
Q1
2N3904
or 2N2222
D6
D7
LED
JP1
HEADER 8
R112
4.7K
R111
4.7K
DS3231 BOARD
JP2
HEADER 6
DS1621 BOARD
JP3
HEADER 8
ECE3301L SESSION 3
LAB FINAL