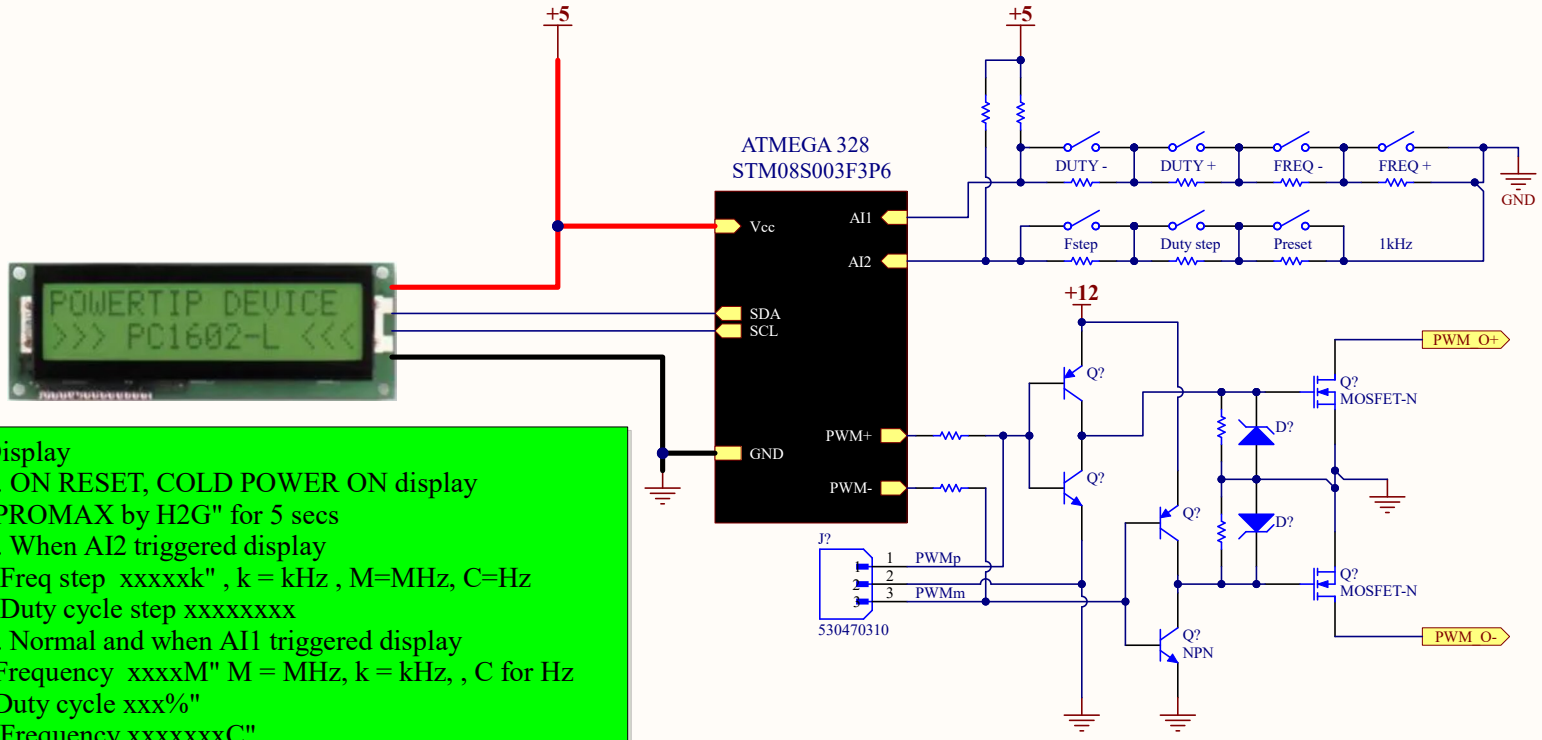

Display
1. ON RESET, COLD POWER ON display
"PROMAX by H2G" for 5 secs
2. When AI2 triggered display
" Freq step xxxxxk" , k = kHz , M=MHz, C=Hz
" Duty cycle step xxxxxxxx
3. Normal and when AI1 triggered display
"Frequency xxxxM" M = MHz, k = kHz, , C for Hz
"Duty cycle xxx%"
" Frequency xxxxxxxC"

Frequency steps

default 1Hz
1st press 10 Hz
2nd press 100 Hz
3rd press 1 KHz
4th press 10kHz
5th press 1Hz

Duty cycle steps

default 1%
1st press 5%
2nd press 10%
3rd press 1%

Preset

when pressed set PWM output to 1kHz, 50% duty cycle

Dead zone

adjustable in code only

Title	PWM with PP out and dead zone	
Size A4	Number	Revision
Date: 7/09/2022		Sheet of
File: E:\TREASURE64 sync\..\soft PWM.SchDoc		Drawn By: