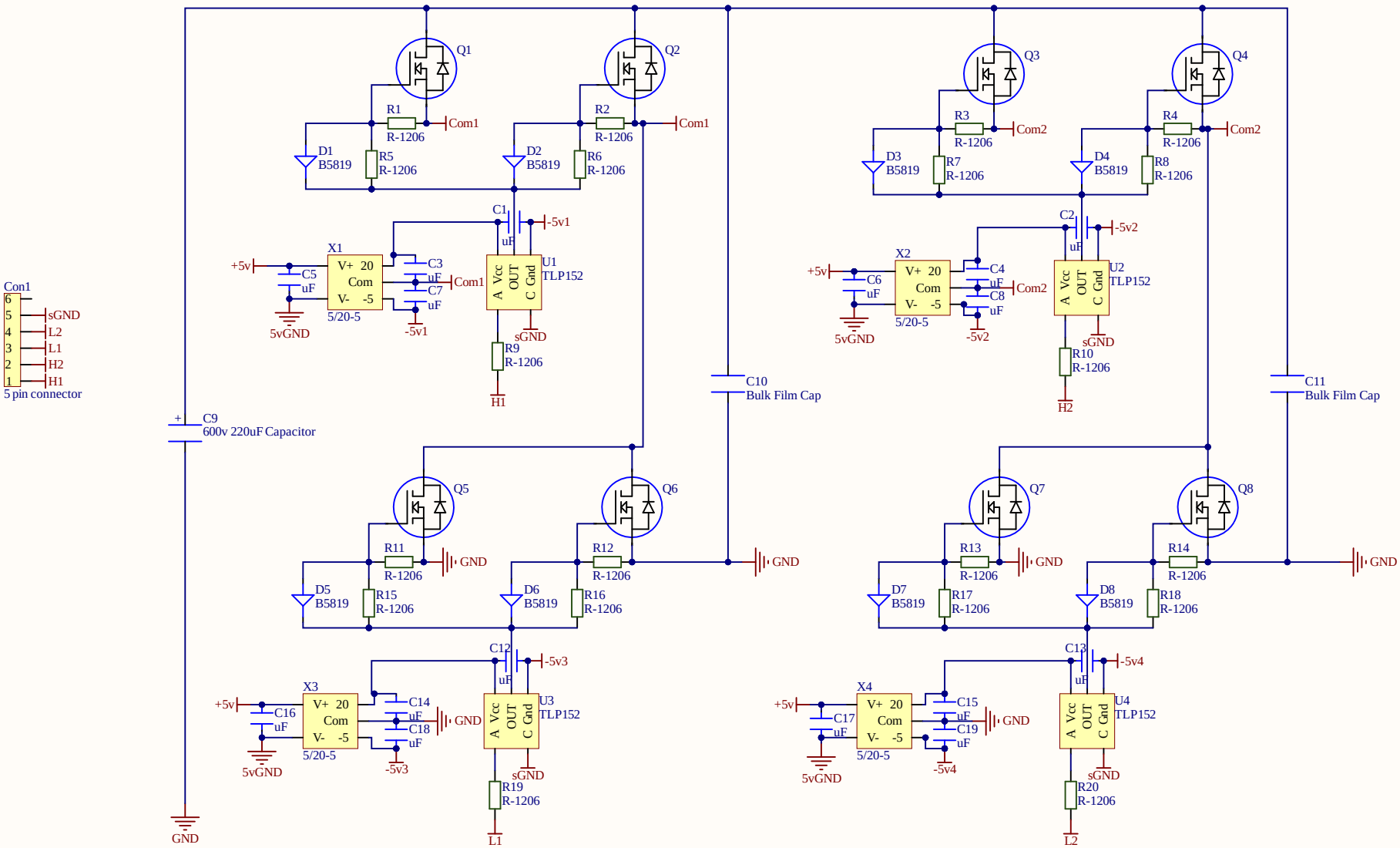

Title		
Size A4	Number	Revision
Date: 1/25/2024		Sheet of
File: C:\Users\..\UniversalFullBridge.SchDoc		Drawn By: