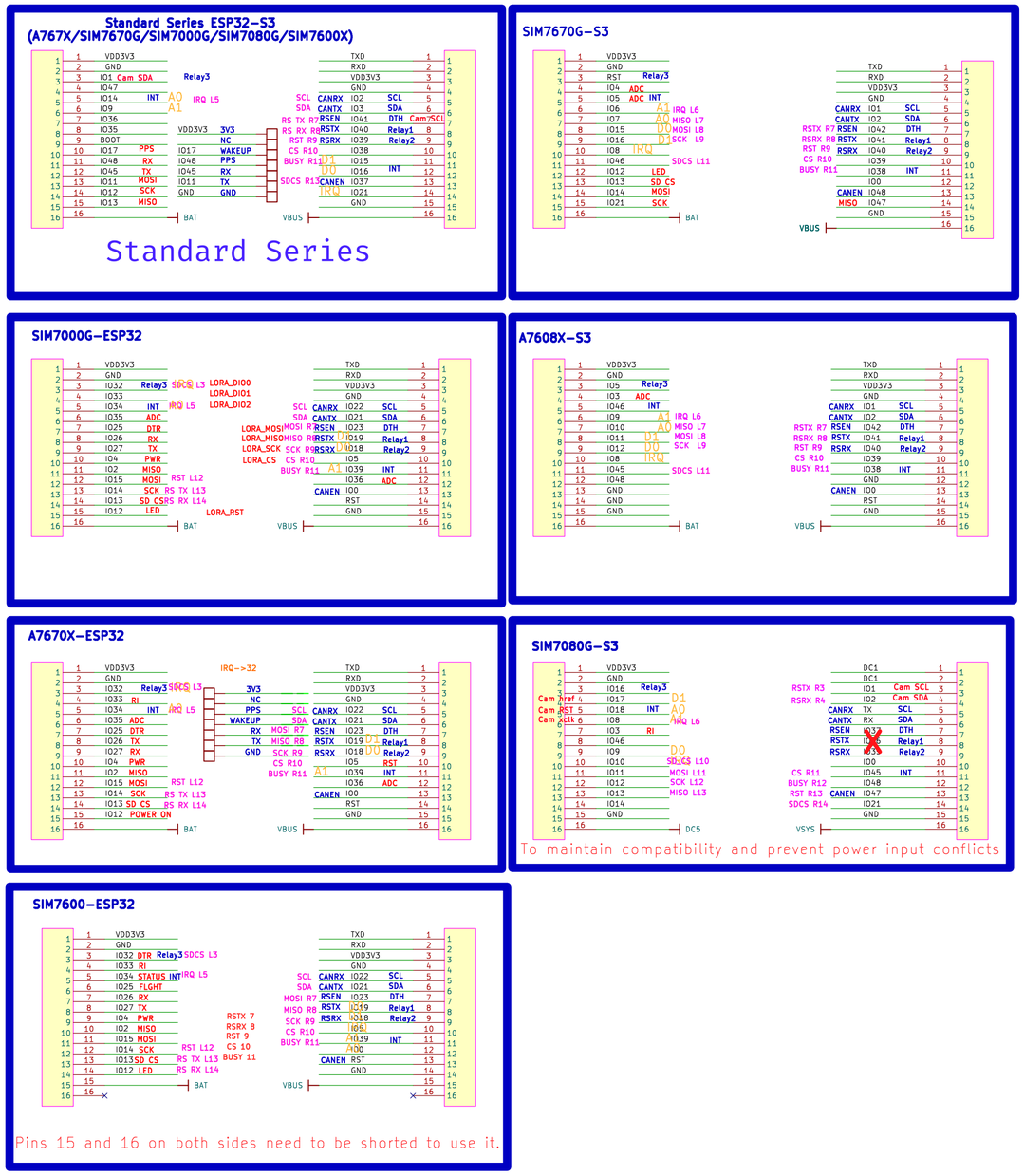

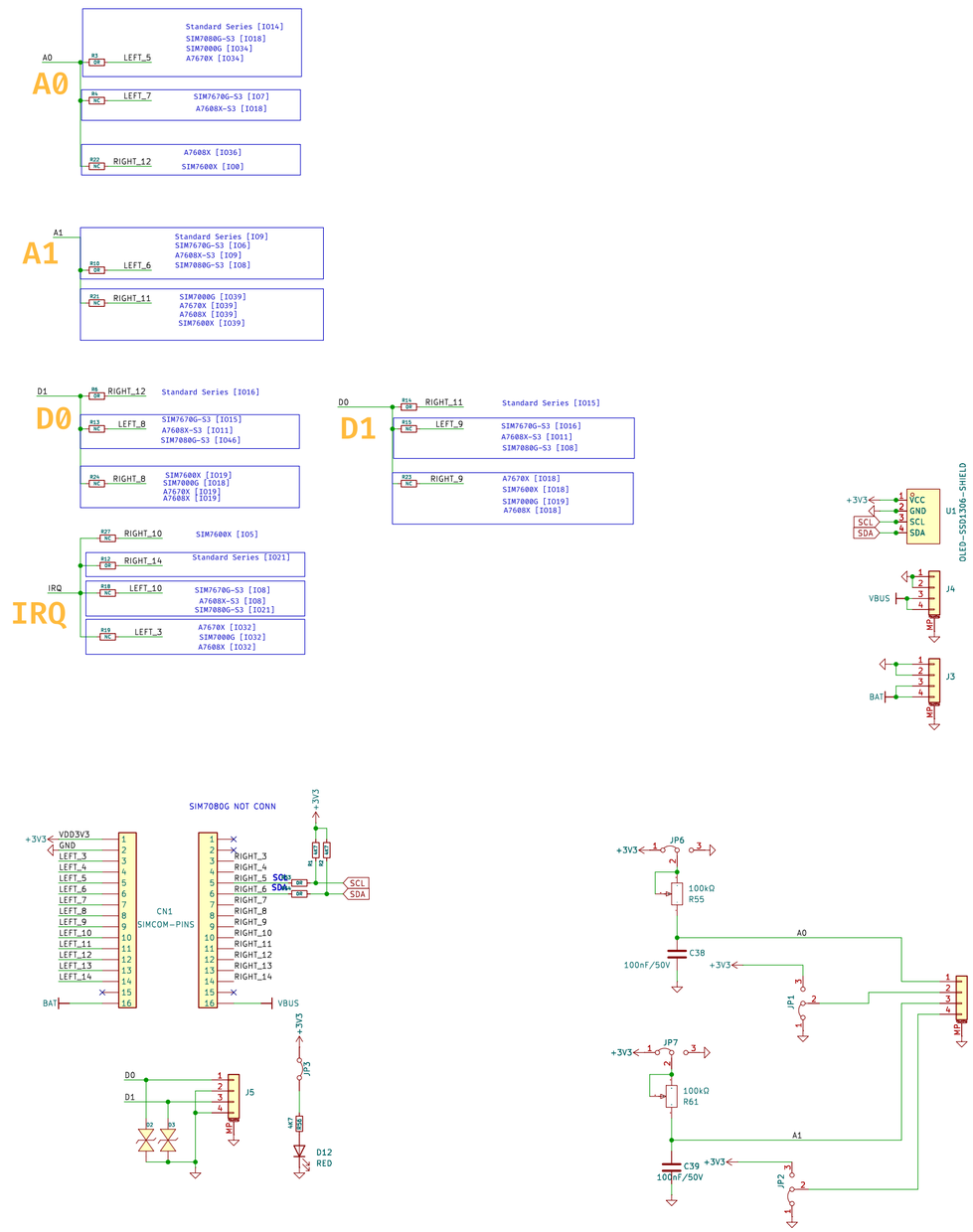

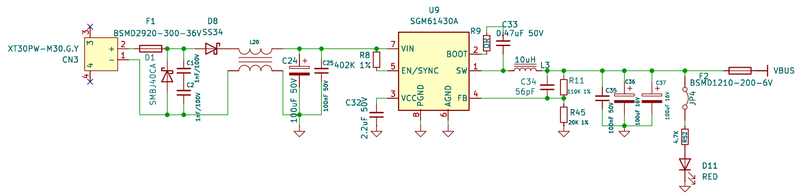

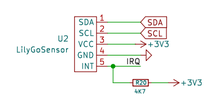

LILYGO®

Sheet: /SIMCOM-PINS/
File: SIMCOM-PINS.kicad_sch

Title: T-SIM-DC-Shield

Size: A2	Date:	Rev: V1.0
KiCad E.D.A. 9.0.4	RevAuthor:Lewis He	Id: 7/3