END SEMESTER EXAMINATION (SEMESTER II) – 2020/21

CS409 – ARTIFICIAL NEURAL NETWORKS & FUZZY LOGIC (3 Credits)

ANSWERS TO SELECTED QUESTIONS

Answer **All** Questions | Time Allowed: **Two** hours

Marks Allocation:

Q1	24		Q2	25		Q3	25		Q4	26

1. h) Applying backpropagation to train a neural network is guaranteed to find the globally optimal solution. (**False)**

   i) To avoid overfitting a neural network, you can stop training earlier. **(True)**

   j) The number of weights of a conv layer depends on the depth of the input volume. **(True)**

   k) A perceptron is a McCulloch-Pitts neuron with a learning algorithm. **(True)**

   l) You are doing batch gradient descent training. Then, it is always necessary to shuffle the training data. (**False)**

2. d) The application below gives the input camera image to two modules: the Car Detector C and the Pedestrian Detector P. C outputs a set of bounding boxes localizing the cars. P outputs a set of bounding boxes localizing the pedestrians. The bounding boxes are then given to a Path Planner S, which outputs the steering angle. Assume all these submodules use neural networks. **[5 Marks]**

   Explain what data you need to train the submodules in the pipeline.

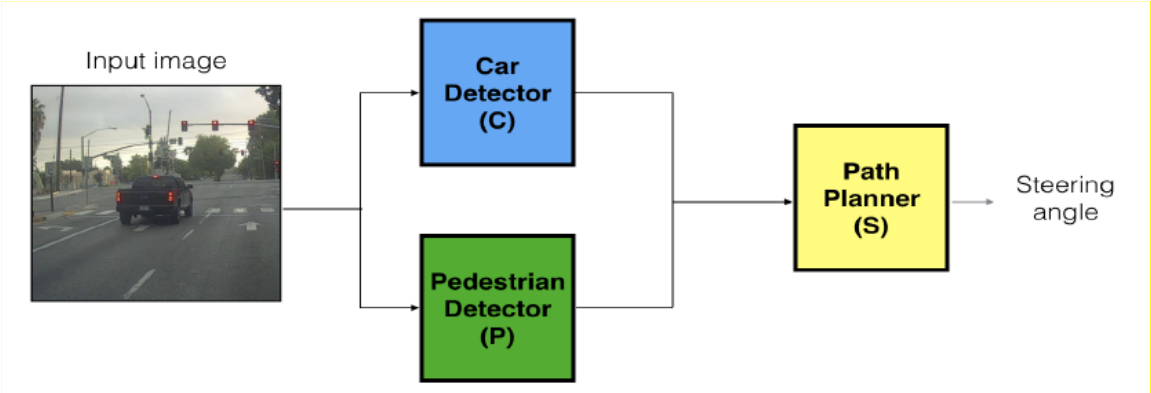

ANS:
Car and Passenger modules require **a large set of images labelled with bounding boxes**, and **class labels indicating cars and passengers**. Images must contain real traffic.
Path Planner module should track the detected Cars and Passengers (**bounding boxes**).

03. a) You want to train a neural network to drive a car. Your training data consists of grayscale 64×64 pixel images. The training labels (outputs) include the human driver's steering wheel angle in degrees and the human driver's speed in miles per hour. Your neural network consists of an input layer, a hidden layer with 2,048 units, and an output layer. The input and outputs layers are designed to satisfy the requirements. Each neuron uses a bais unit. **[4 marks]**

Calculate the number of weights of this network.

ANS: (64x64) x2048 + (2048x2) +(2048+2) = 8,394,754

b) Show that the following network can learn a dataset that follows XOR gate. Each neuron uses the step (threshold) function as the activation function, and θ values indicate the threshold values. **[5 marks]**

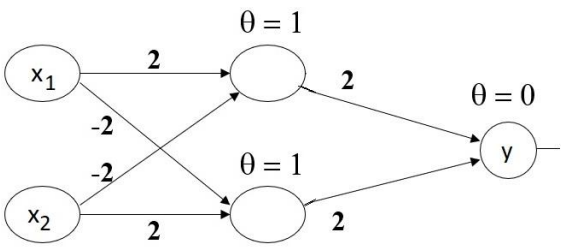

ANS: Consider the dataset below and compute the outputs of all neurons. It can be seen that the output neuron provides the correct output. Therefore this network can learn XOR data.

x1	x2	N1	N2	N3 (y)
0	0	0	0	0
0	1	0	1	1
1	0	1	0	1
1	1	0	0	0

c) Explain how the accumulated gradient (Δ) for weight W_{ij}^{l} is calculated using local gradients (δ) in the backpropagation algorithm. **[3 marks]**

ANS: The accumulated gradient (Δ) is calculated using the following equation.

$$\Delta_{ij}^{(\ell)} = a_j^{(l)} \delta_i^{(l+1)}$$

where $\delta_i^{(l+1)}$ = local gradient of ith neuron of the layer (l+1)

$a_j^{(l)}$ = activation of of jth neuron of layer (l)

d) Consider a simple neural network with 2-hidden layers given below, which will be trained to classify the dataset provided below (on the right). The network is trained using the backpropagation algorithm with the batch gradient descent approach. All neurons use the sigmoid function as the activation function. The neurons do not have bias units. Make sure to use standard notations. Show all your calculations.

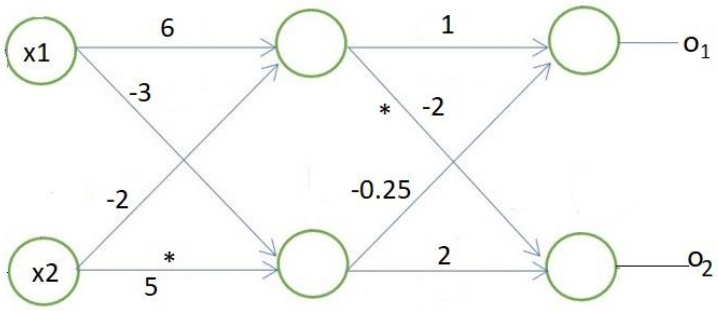

x_1	x_2	y_1	y_2
3	1	1	0
-1	4	0	1
2	3	1	0
...			
197 more instances			

i) Briefly describe the classification problem represented by this dataset. **[2 marks]**

ANS: It is a two-input dataset with two output classes (class 1 and 2). Therefore, this is a binary classification problem. Class 1 and 2 are represented by (1,0) and (0,1), respectively.

ii) For the 1st instance, calculate the loss function of the network if the following equation defines it. **Show all values using three decimal points without rounding.** **[7 marks]**

$$J(W,b,x,y) = \frac{1}{2}\left(\sum_{i=1}^{n} \|(y_i - o_i)^2\|\right)$$

ANS:

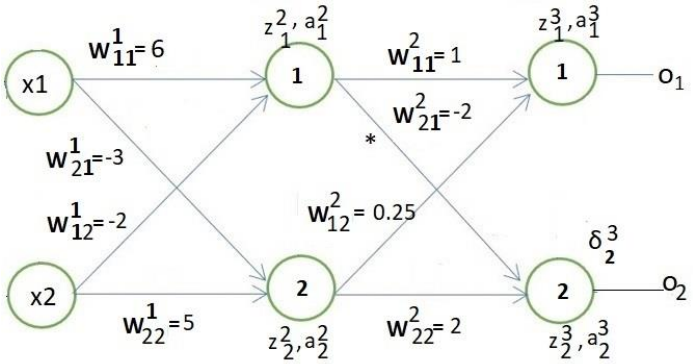

ANS:

$z_1^2 = 3 \times 6 + 1 \times -2 = 16 \quad a_1^2 = \frac{1}{1+e^{-16}} = 0.999$

$z_2^2 = 3 \times -3 + 1 \times 5 = -4 \quad a_2^2 = \dfrac{1}{1+e^4} = 0.017$

$z_1^3 = 0.999 \times 1 + 0.017 \times 0.25 = 1.003 \quad a_1^3 = \frac{1}{1+e^{-1.003}} = 0.731$

$z_2^3 = 0.999 \times -2 + 0.017 \times 2 = -1.964 \quad a_2^3 = \dfrac{1}{1+e^{-1.003}} = 0.123$

$$J(W,b,x,y) = \frac{1}{2}\left(\sum_{i=1}^{n} \|(1-0.731)^2 + (0-0.123)^2\|\right) = 0.043$$

iii) Calculate the Δ value corresponding to the weight marked with " * ". All Δ values have been initialized to 0. **Show all values using three decimal points without rounding.** **[4 marks]**

Hint: The first derivative of the sigmoid function is $\sigma'(v) = \sigma(v)(1-\sigma(v))$

ANS:

$\delta_2^3 = -(y_2 - a_2^3)(\sigma(v)(1-\sigma(v)) = -(0-0.123) \times (0.123 \times (1-0.123) = 0.013$

$\Delta W_{21}^2 = \Delta W_{21}^2 + a_1^2 \delta_2^3 = 0 + (0.999 \times 0.013) = 0.012$

4. a) An example of an image convolution is give on the right/below. Explain how this can be achieved using neuron(s) with ReLU activations. **It is enough to explain one of the convolutions only.** **[5 marks]**

10	10	10	0	0	0
10	10	10	0	0	0
10	10	10	0	0	0
10	10	10	0	0	0
10	10	10	0	0	0
10	10	10	0	0	0

*

1	0	-1
1	0	-1
1	0	-1

=

0	30	30	0
0	30	30	0
0	30	30	0
0	30	30	0

ANS:

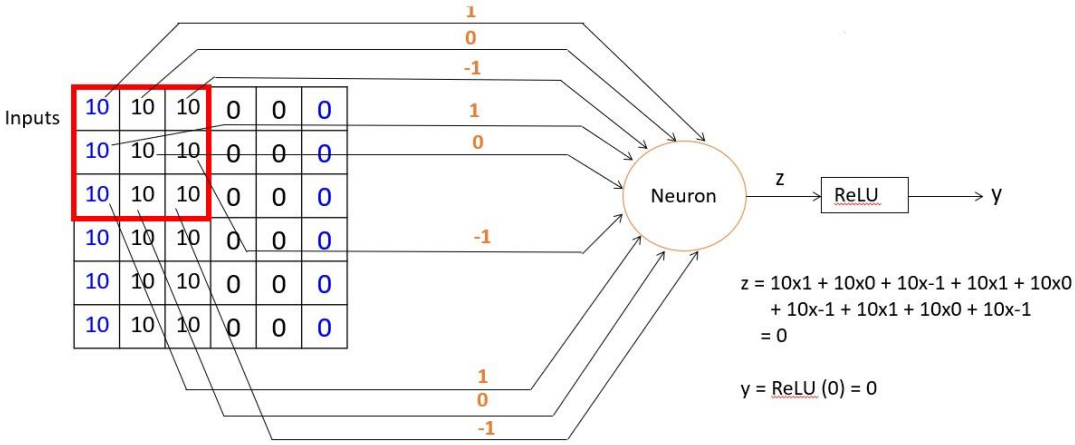

b) What does it mean by "unfreezing of layers" in transfer learning? **[3 marks]**

ANS:

- Unfreeze a few of the top layers of a frozen model base and jointly train both the newly-added classifier layers and the last layers of the base model.
- This allows us to fine-tun the higher-order feature representations in the base model in order to make them more relevant for the specific task.

d) Calculate the 3x3 max pooling output of the feature map shown on the left where S = 2. **[4 marks]**

1	4	2	3	8	9
6	9	12	10	4	14
7	1	4	5	3	11
12	2	4	5	21	4
34	5	16	15	1	3
8	10	13	18	19	9

ANS:

12	12
34	21

e) A CNN created to detect specific cancer using histopathological images is shown below. The network outputs whether the image represents a cancer or not. In convolutional layers the stride and padding are set to 1 and 0, respectively. All neurons use a bias unit. **[10 marks]**

For each layer, determine the relevant hyperparameters and calculate the number of trainable weights. **Use the table below to provide details.**

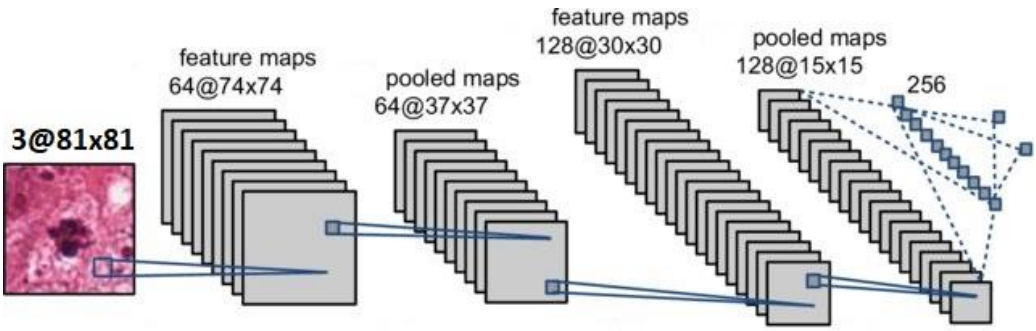

Note: The network uses bias units.

ANS:

Layer	**Type**	**Details (P=0 and S=1 for Conv layers)**	**Output Volume Size**	**No. of trainable weights**
CONV8-64	Convolutional	Uses 64 8x8 filters	74x74x64	(8x8x3)x64 + 64 = 12352
POOL2	Pooling (eg., max)	Uses 2x2 filters with Stride=2	37x37x64	
CONV8-128	Convolutional	Uses 128 8x8 filters	30x30x128	(8x8x64)x128+128 = 524,416
POOL2	Pooling (eg., max)	Uses 2x2 filters with Stride=2	15x15x128	
FC-256	Fully Connected	Hidden layer of 256 neurons	1x512	(15x15x128x256)+256= 7,373,056
FC-2	Fully Connected	Output layer with 2 neurons	1x2	(256x2)+2= 514

----------END----------