END SEMESTER EXAMINATION (SEMESTER II) – 2021/22

CS409 – ARTIFICIAL NEURAL NETWORKS & FUZZY LOGIC (3 Credits)

ANSWERS TO SELECTED QUESTIONS

Answer **All** Questions | Time Allowed: **Two** hours

---

1. [25 Marks]

a) The outputs of a softmax activation function used in an output layer are given below. Explain the purpose of softmax activation functions in neural networks referring to this example. **[4 marks]**

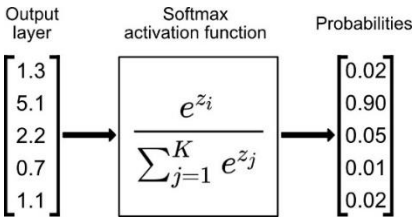

ANS: This example shows the output values of five output neurons representing five classes. The softmax function converts the values to a probability distribution. The class corresponding to the neuron with highest probability value will be assigned as the output class label.

b) **Statement :** If the training data is linearly separable and representative of the true distribution of the input data, the perceptron algorithm always finds the optimal decision boundary for the true distribution. **[4 marks]**
Do you agree with this statement? Justify your answer.

ANS: Perceptron converges. However, it does not guarantee the optimal solution

c) Let S1 = {(x1,y1); (x2,y2); _ _ _ ; (xn,yn} be n linearly separable points. **[4 marks]**
Let S2 be a set of data points generated from S1 where, S2={(cx1,y1)}; (cx2,y2); _ _ _ ; (cxn,yn)} and c > 1 is a constant.
Suppose that the perceptron algorithm is run on both data sets **separately**, and that the **perceptron algorithm converges on S1**.
Does this imply that the perceptron algorithm converges for S2 as well? Explain your answer.

ANS: The perceptron will converge on S2 as well. Since S is linear and c is constant S2 is also linear.

2. [25 Marks]

a) What is the purpose of the "λ" term used in loss functions such as the one given below. **[4 marks]**

$$J(W,b) = \left[\frac{1}{m}\sum_{i=1}^{m}\left(\frac{1}{2}\left\|h_{W,b}(x^{(i)}) - y^{(i)}\right\|^2\right)\right] + \frac{\lambda}{2}\sum_{l=1}^{n_l-1}\sum_{i=1}^{s_l}\sum_{j=1}^{s_{l+1}}\left(W_{ji}^{(l)}\right)^2$$

ANS: λ is used as a regularization constant to avoid overfitting

c) Explain how the local gradient of the colored neuron of the 3rd hidden layer is calculated during the backpropagation algorithm. Assume that all neurons use the sigmoid activation function. (Use standard notations.) **[5 marks]**

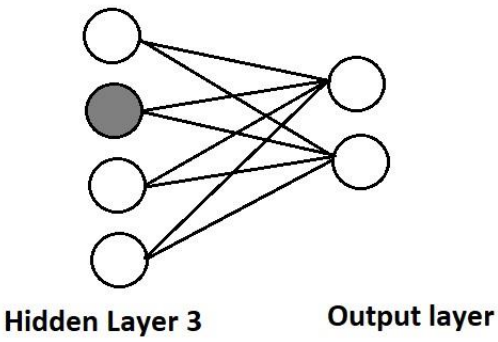

ANS: $\delta^3_2 = (W^3_{12}.\ \delta^3_2 + W^3_{12}.\ \delta^3_2).\ \sigma'(z^3_2) = (W^3_{12}.\ \delta^3_2 + W^3_{12}.\ \delta^3_2).\ (a^3_2(a^3_2-1))$

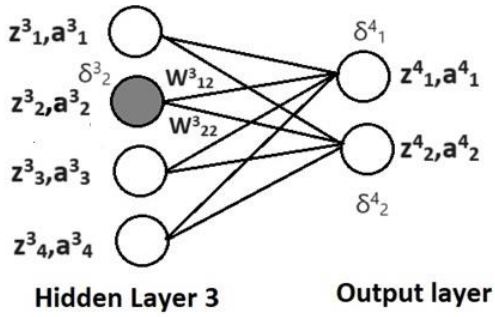

d) Consider a dataset with 1000 training samples. Explain how mini-batch gradient descent learning (backpropagation) can be used for training a multilayer perceptron network on this dataset. **[4 marks]**

ANS:
The training data can be divided into mini-batches of 50 samples each. During each epoch, the weights are updated after processing all samples in each mini-batch (i.e., after every 50th sample).

e) Consider a multilayer perceptron network with a single hidden layer including two neurons. The input layer is 3-dimensional x=(x1,x2,x3). The output layer includes one neuron (y). All neurons use bias weights and ReLU units as activation functions. **[8 marks]**

Assume that all weights and biases are set to 0.1. The first input example is (1,2,1) and its output label is 1.

Using the backpropagation algorithm, compute the updated gradient (Δb) of the bias weight of the output neuron after processing the first input example. (Use standard notations.)

ANS:

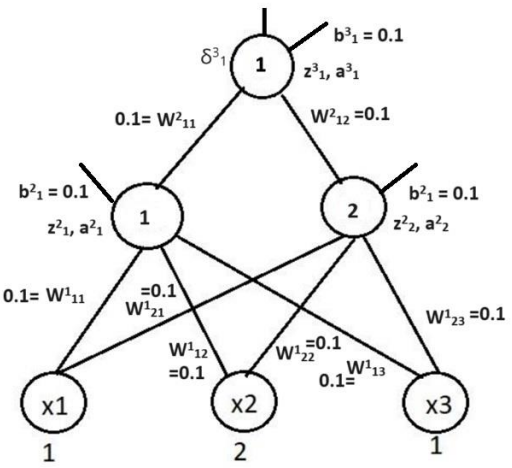

$z^2_1 = 0.1x1 + 0.1x2 + 0.1x1 + 0.1 = 0.5$

$a^2_1 = ReLU(0.5) = 0.5$

$z^2_2 = 0.1x1 + 0.1x2 + 0.1x1 + 0.1 = 0.5$

$a^2_2 = ReLU(0.5) = 0.5$

$z^3_1 = 0.1x0.5 + 0.1x0.5 + 0.1 = 0.2$

$a^3_1 = ReLU(0.2) = 0.2$

$\delta^3_1 = -(1 - 0.2).ReLU'(0.2) = -0.8x1 = -0.8$

$\Delta b^3_1 = \Delta b^3_1 + 1.\ \delta^3_1 = 0 + 1x-0.8 = -0.8$

3. [25 marks]

a) Given 1000 images of tea leaves from each of three Sri Lankan tea varieties, totaling 3000 images, describe the steps required to develop a classification model using the VGG16 convolutional neural network for categorizing a tea leaf into one of three available varieties. **[6 marks]**

ANS:

1) Preprocess the images (e.g., resize)

2)Load the dataset and create a split (train:test = 2100:900)). It is a 3-class model.

3)Load in the pre-trained VGG-16 model trained on the ImageNet dataset.

4)Freeze parameters (weights) in model's convolutional layers. That is use only the convolutional layers.

5)Add a custom classifier (MLP) with several layers of trainable parameters to the model. You may draw a diagram.

6)Train classifier layers on the 2100 training images (make a validation split if necessary) for a defined number of epochs.

7)Fine-tune hyperparameters and unfreeze convolutional layers if required.

b) In a CNN, the first convolutional layer transforms a (227 x 227) color image input into a feature volume of dimensions (55 x 55 x 96). Calculate the following; **[4 marks]**

(i) filter size

(ii) padding

(iii) stride used in this layer

ANS: Filter size = 11 x 11, Padding = 0, Stride = 4

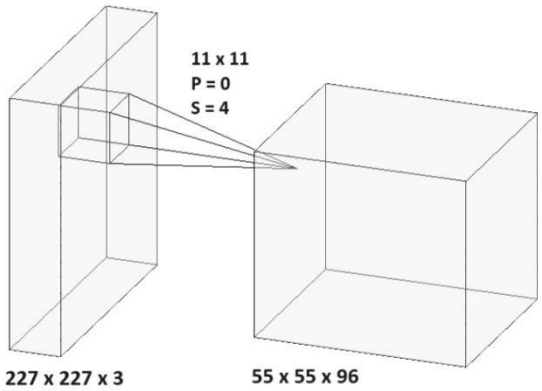

c) Consider the ResNet-18 architecture given below.

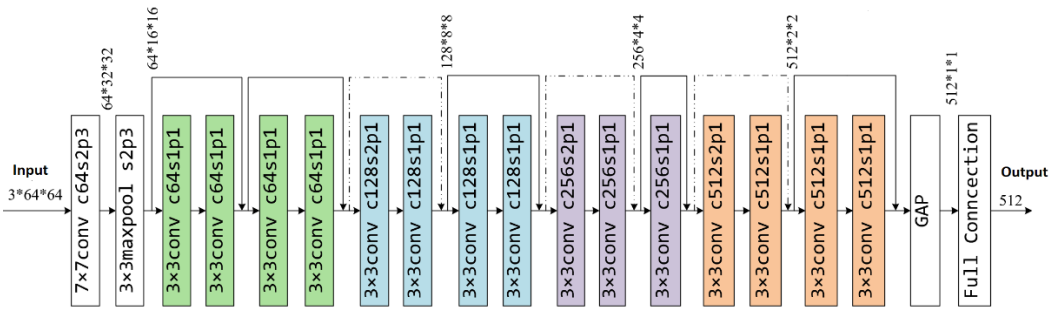

Here, c64s2p3 means 64 convolutions with stride 2 and padding 3.

i) What do the boxed arrows, such as the one connecting layer 2 to layer 4, represent? What is the significance or purpose of these connections? **[2 marks]**

ANS: Those are called residual connections.

A residual connection connects the output of one earlier convolutional layer to the input of another future convolutional layer several layers later.

This block allows activations to bypass one or more layers through a shortcut connection, making the optimization of deep networks easier.

Solves Vanishing/Exploding Gradient: Residual connections alleviate the vanishing and exploding gradient problems in deep networks, allowing for the training of much deeper architectures.

ii) Calculate the number of trainable parameters in each of the first six layers. **[7 marks]**

ANS:

Layer	**No. of trainable weights**
7x7 Conv c64s2p3	(7x7x3)x64 + 64 = 9472
3x3 maxpool s2p3	0
3x3 Conv c64s1p1	(3x3x64)x64 + 64 = 36,928
3x3 Conv c64s1p1	(3x3x64)x64 + 64 = 36,928
3x3 Conv c64s1p1	(3x3x64)x64 + 64 = 36,928
3x3 Conv c64s1p1	(3x3x64)x64 + 64 = 36,928

4. [25 marks]

a) What is meant by a "*pre-trained NLP model*"? **[4 marks]**

ANS:
Pre-trained models (PTMs) for natural language processing (NLP) are deep learning models, such as transformers, that have been trained on large datasets to perform specific NLP tasks.

By training on extensive corpora, PTMs can learn universal language representations, which are useful for various downstream NLP tasks such as text summarization, named entity recognition, sentiment analysis, part-of-speech tagging, language translation, sentiment analysis, text generation, information retrieval, text clustering, and many more.

This eliminates the need to train a new model from scratch each time.

c) In image caption generation applications, the model takes an image as input and produces a caption that describes the image. The model below takes an image containing a few Giraffes who

are standing and outputs the text “Giraffes Standing”. <start> and <end> are tokens to indicate starting and ending of a sentence.

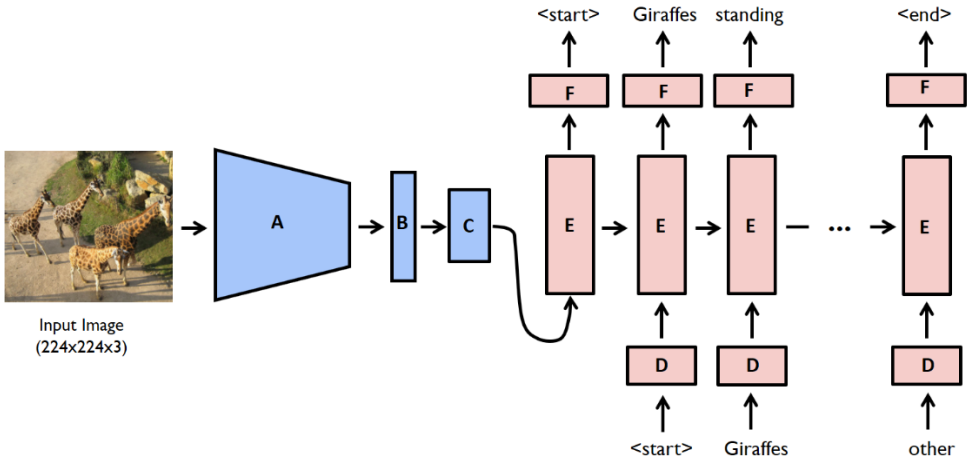

i) Suggest the most suitable neural network types for A,B,C,D,E, and F layers of this model. **[7 marks]**

ANS:

Layer	Type
A	Convolutional Neural Network
B	Fully connected layer (hidden layer)
C	Fully connected layer (Output layer/Linear layer)
D	Embedding layer
E	LSTM layer
F	Fully connected layer (softmax)

ii) Suggest a technique that can improve the accuracy of this model. **[3 marks]**

ANS:
Replace E with self attention layers, Bi-LSTM layers or Several LSTM layers.

d) LSTM network has been developed to classify a data set composed of posts extracted from Twitter that had been manually annotated into 7 different sentiment classes. The 7 different sentiments present 3 pairs of opposite sentiments (i.e., [Love vs Hate], [Happiness vs Sadness], and [Fun vs Anger]) in addition to the sentiment class [Neutral]. **[7 marks]**
e.g.,
Input: *I am on a boat trip to denmark*
Output: *Happiness*

The network has **two** LSTM layers with **same** hidden state dimension of 64. Input embeddeing size of a word in the tweet is 32. One softmax layer is used as the output layer.

Calculate total number of trainable weights of the **feature learning layers**.

ANS:

Feature learning layers are the LSTM layers.
Number of trainable weights of one LSTM layer =((64+32)x64 + 64)x4 = 6208x4 = 24832
Therefore, total number of trainable weights of the feature learning layers = 24832x2 = 49664

----------END----------