Beagle Bone Black

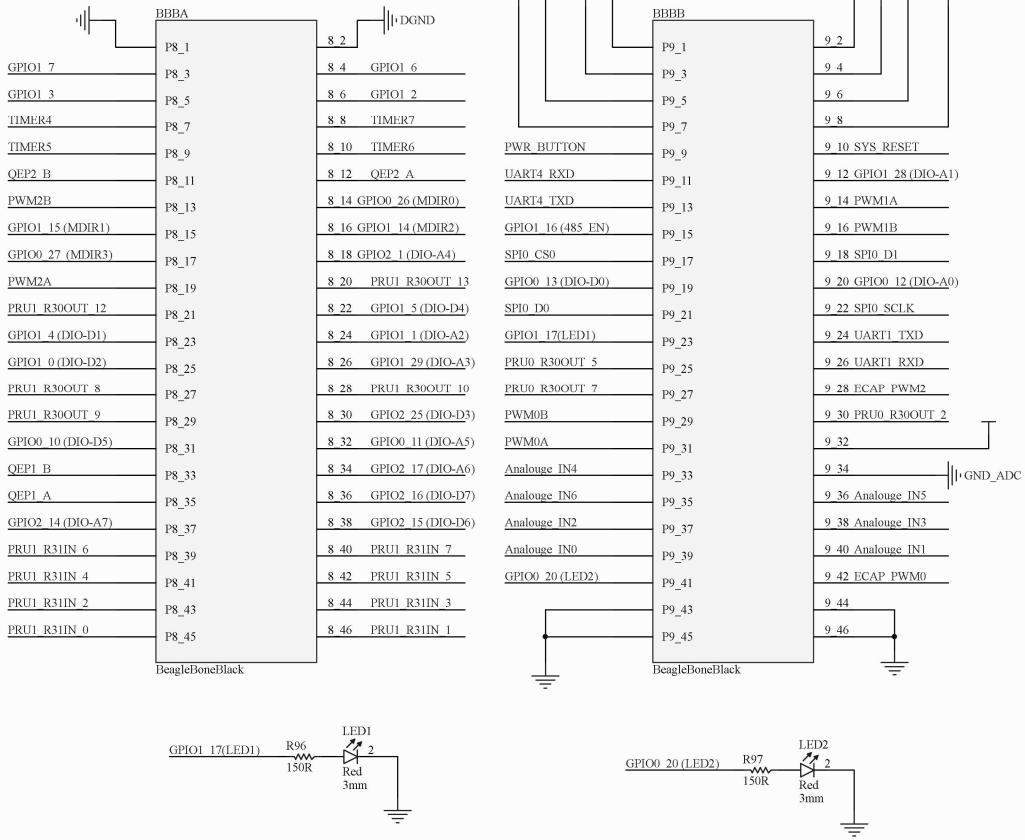

Expansion_Left

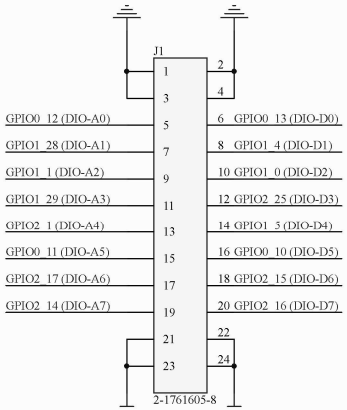

Expansion_Right

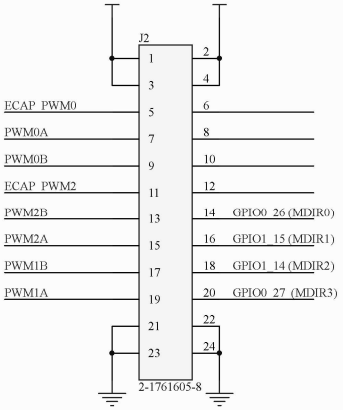

Title		
Size A3	Number	Revision
Date: 8/19/2021		Sheet of
File: C:\Users\..\BeagleBoneHeader.SchDoc		Drawn By: