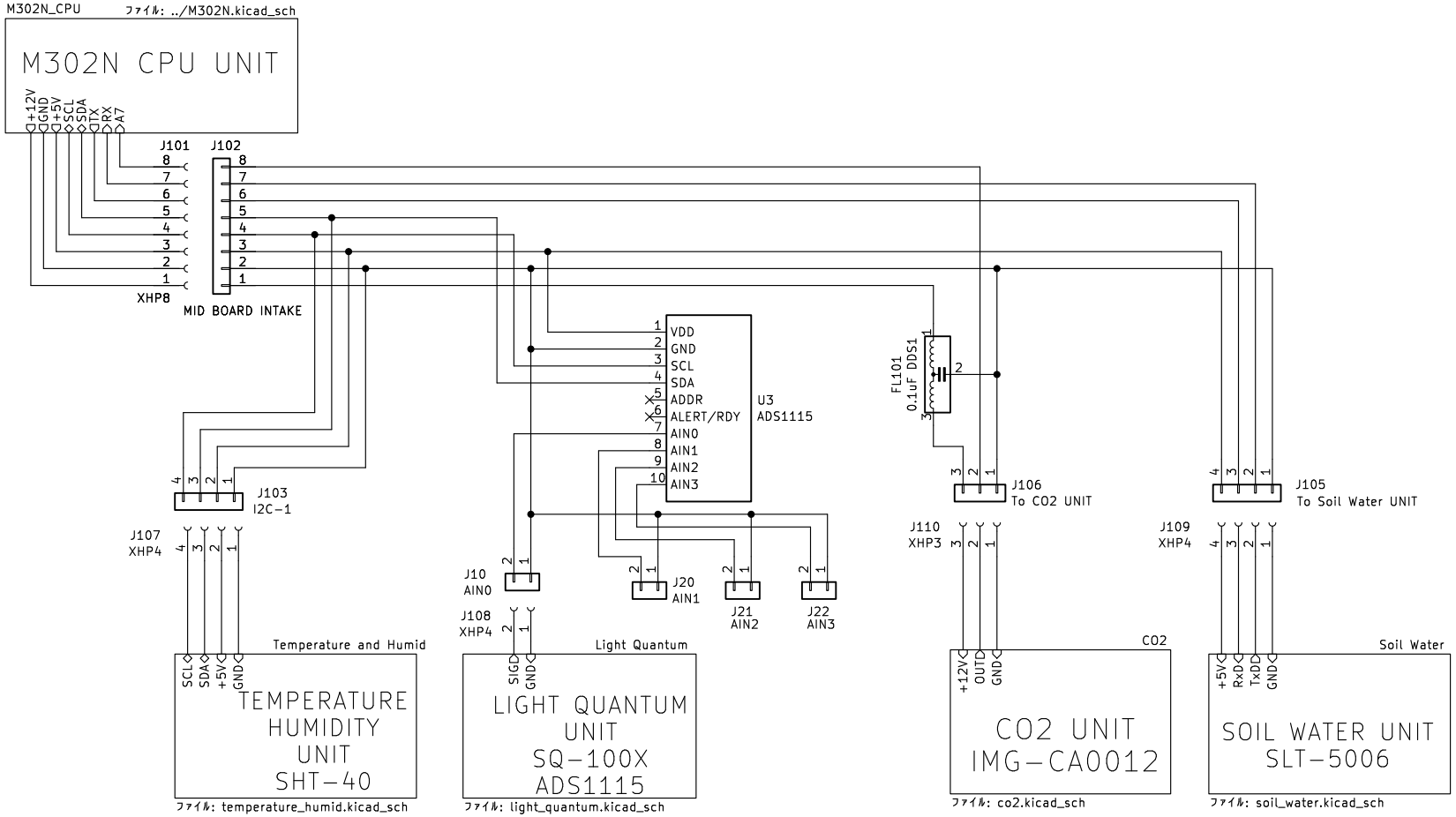

Append DDS1

YS Lab

Sheet: /

File: M302ULTRA.kicad_sch

Title: M302N-ULTRA for Green HOUSE

Size: A4	Date: 2025-10-01	**Rev: 2.10**
KiCad E.D.A. 9.0.3		Id: 1/6

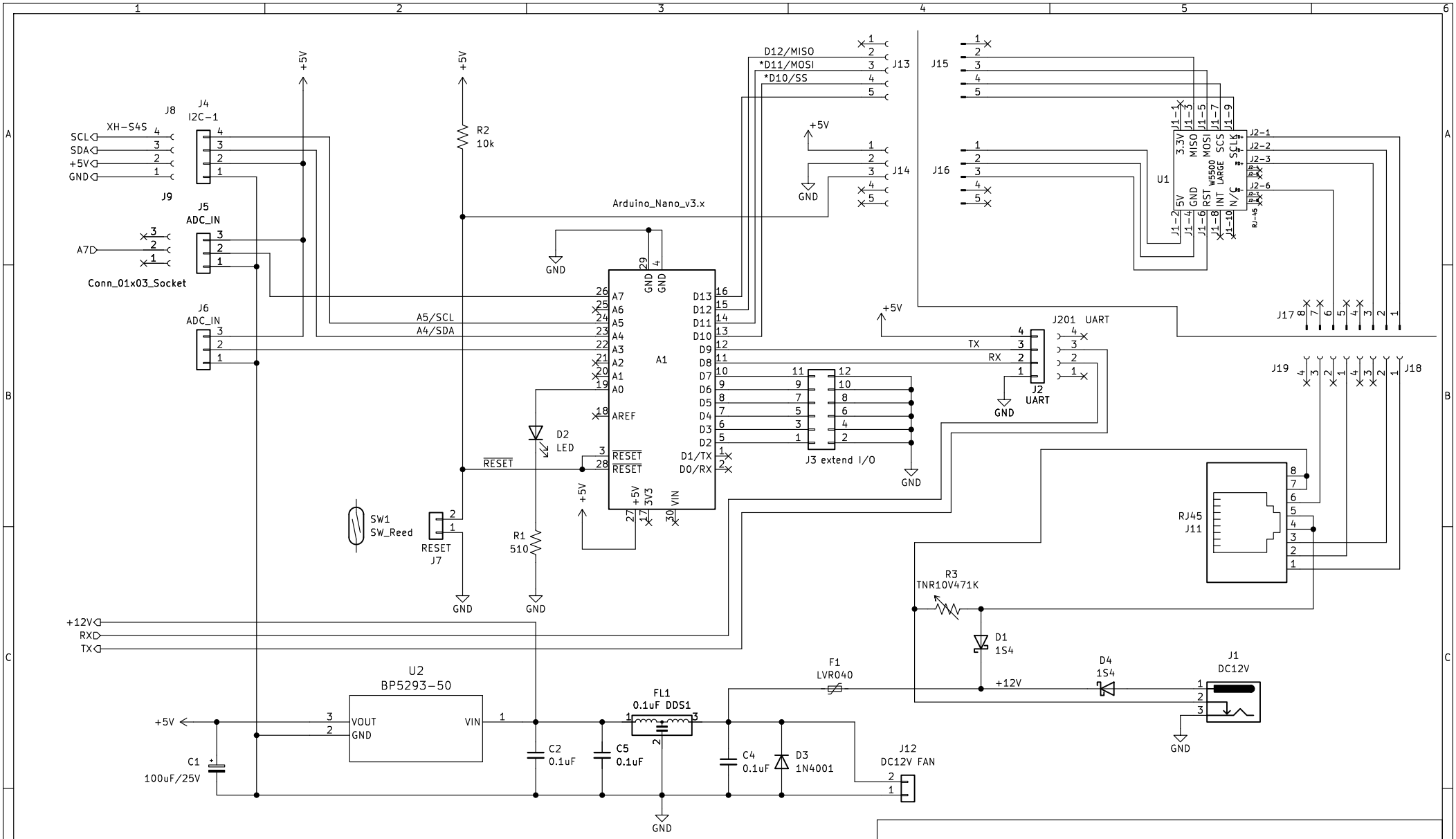

YS-Lab Masafumi Horimoto

Sheet: /M302N_CPU/
File: M302N.kicad_sch

Title: M302N for ULTRA

Size: A4	Date: 2025-10-01	**Rev: 2.00**
KiCad E.D.A. 9.0.3		Id: 2/6

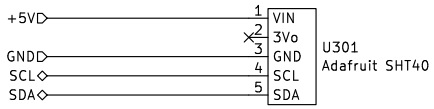

YS Lab

Sheet: /Temperature and Humid/
File: temperature_humid.kicad_sch

Title: M302N-ULTRA Temperature sensor

Size: A4	Date: 2025-10-01	**Rev: 1.00**
KiCad E.D.A. 9.0.3		Id: 3/6

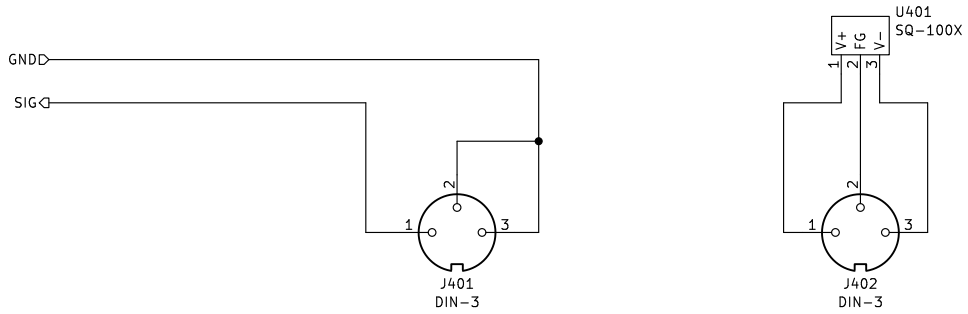

YS Lab

Sheet: /Light Quantum/
File: light_quantum.kicad_sch

Title: M302N-ULTRA SQ-100X-SS

Size: A4	Date: 2025-10-01	**Rev: 2.00**
KiCad E.D.A. 9.0.3		Id: 4/6

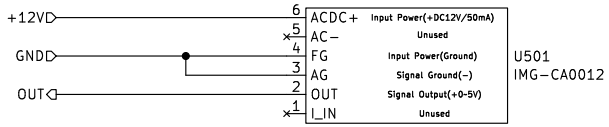

YS Lab

Sheet: /CO2/
File: co2.kicad_sch

Title: M302N−ULTRA CO2 Sensor

Size: A4	Date: 2025−10−01	**Rev: 1.00**
KiCad E.D.A. 9.0.3		Id: 5/6

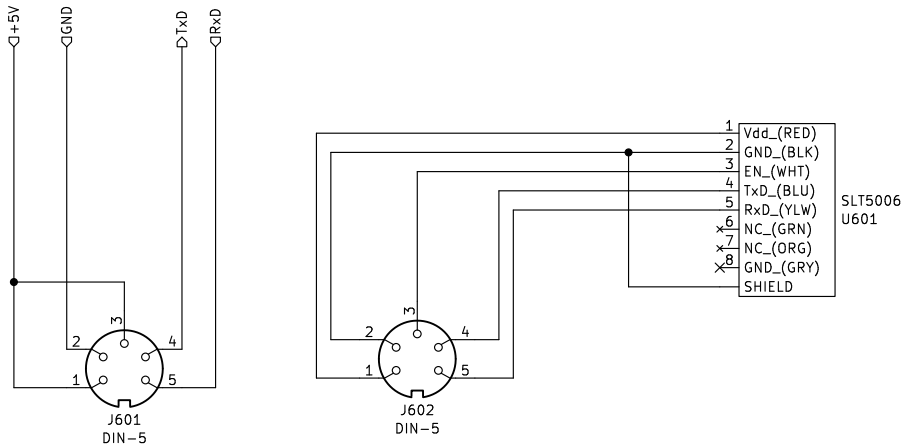

YS Lab

Sheet: /Soil Water/
File: soil_water.kicad_sch

Title: M302N-ULTRA Soil Water sensor

Size: A4	Date: 2025-10-01	**Rev: 1.00**
KiCad E.D.A. 9.0.3		Id: 6/6