ENEL 676 – Distributed Energy Resources Final Project

Ahmed Mashook Iqbal
UCID: 30267500

G K Md Muttakin
UCID: 30246286

Monjurul Haque
UCID: 30261730

Introduction

This study evaluates the impact of Distributed Energy Resources (DER) on system grounding and protection performance. The objective is to analyze relay desensitization (DI) and coefficient of grounding (CoG) before and after DER integration, and to apply mitigation to meet utility requirements.

Proposed SLD with mitigation:

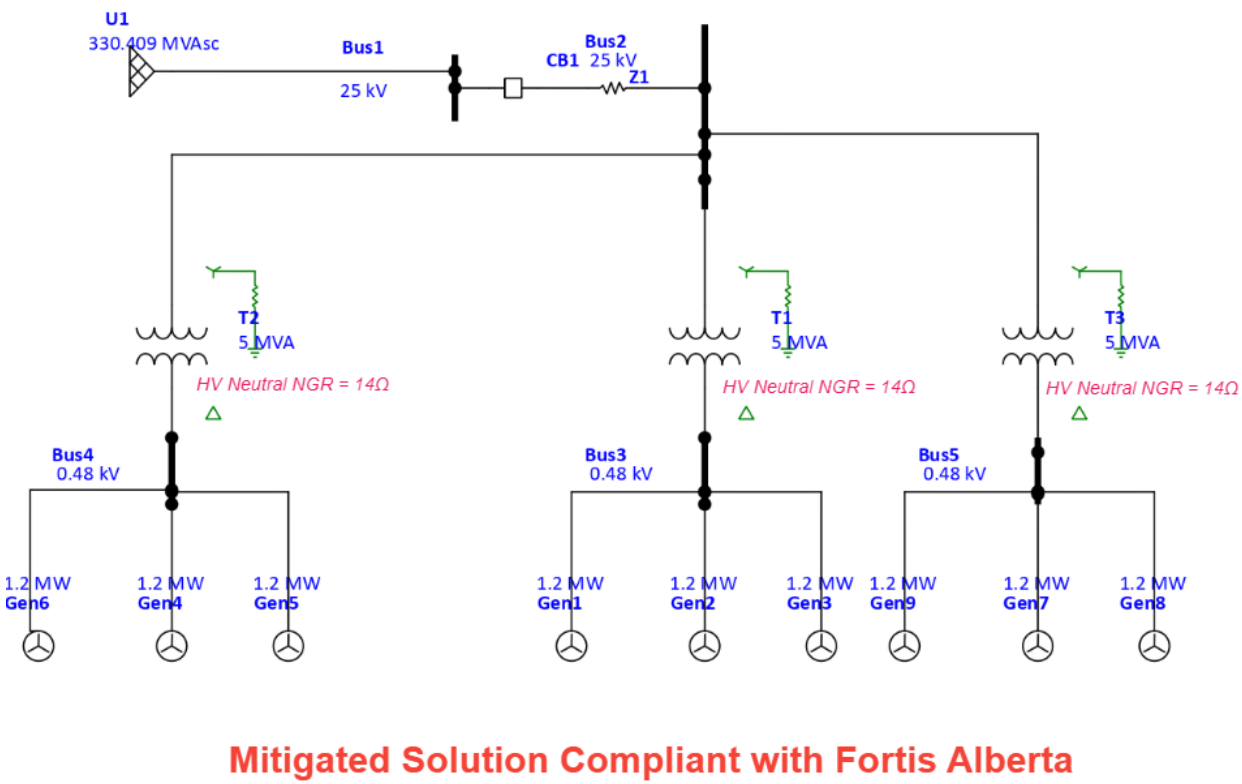

Case 1: System Without DER

Given Data

Substation (25 kV bus):

$$Z_1 = (4 + j30)\% = 0.04 + j0.30$$
$$Z_0 = (1 + j159)\% = 0.01 + j1.59$$

Customer transformer (primary side):

$$Z_1 = (7 + j31)\% = 0.07 + j0.31$$
$$Z_0 = (7 + j161)\% = 0.07 + j1.61$$

Step 1: Sequence Impedances

$$Z_1 = Z_2 = (0.04 + j0.30) + (0.07 + j0.31) = 0.11 + j0.61$$
$$Z_0 = (0.01 + j1.59) + (0.07 + j1.61) = 0.08 + j3.20$$

Step 2: Base Current

$$I_{base} = \frac{100 \times 10^6}{\sqrt{3} \times 25 \times 10^3} = 2309.4\ A$$

Step 3: Fault Current

$$I_{before} = \left| \frac{1}{2Z_1 + Z_0} \right| = 0.4465\ pu$$
$$I_{before} = 0.4465 \times 2309.4 = 1031\ A$$

Case 2: System With DER

Step 1: Transformer Impedance

$$|\ Z_T\ | = 0.059 \text{ pu (5 MVA)}$$
$$R_T = \frac{0.059}{\sqrt{1 + 7^2}} = 0.00834\ ohm$$
$$X_T = 7R_T = 0.05841$$

Convert to 100 MVA base:

$$Z_T = (0.00834 + j0.05841) \times 20 = 0.1669 + j1.1681\ pu$$

Step 2: Generator Impedance

$$X_d'' = 0.156 \text{ pu on 1.2 MVA}$$
$$Z_g = 0.156 \times \frac{100}{1.2} = j13\ pu$$

3 generators in parallel:

$$Z_{g,branch} = j4.3333$$

Step 3: Branch Impedance

$$Z_{branch} = 0.1669 + j1.1681 + j4.3333 = 0.1669 + j5.5014$$

3 branches in parallel:

$$Z_{1,DER} = 0.0556 + j1.8338$$

Step 4: Zero Sequence (Without Mitigation)

Due to Yg–Δ transformer:

$$Z_{0,branch} = Z_T = 0.1669 + j1.1681$$
$$Z_{0,DER} = 0.0556 + j0.3894$$

Step 5: Thevenin Impedance

$$Z_{1,th} = Z_{1,sys} \parallel Z_{1,DER} = 0.0523 + j0.2664$$
$$Z_{0,th} = Z_{0,sys} \parallel Z_{0,DER} = 0.0387 + j0.3140$$

Step 6: Fault Current After DER

$$I_{after} = \left| \frac{1}{2Z_1 + Z_0} \right| \cdot \left| \frac{Z_{0,DER}}{Z_{0,sys} + Z_{0,DER}} \right| = 0.2286\ pu$$
$$I_{after} = 528\ A$$

Step 7: Desensitization Index

$$DI = 100\left(1 - \frac{528}{1031}\right) = 48.8\%$$

Desensitization Index (DI) > 10%; So, DI failed.

Step 8: Coefficient of Grounding

$$CoG = 0.605$$

COG ≤ 0.8; So, COG passed

Mitigation Using NGR

A **14 Ω Neutral Grounding Resistor (NGR)** is added at each transformer neutral.

Step 1: Convert NGR to PU

$$Z_{base} = \frac{25^2}{5} = 125\ \Omega$$
$$Z_n = \frac{14}{125} = 0.112\ pu$$
$$Z_n = 0.112 \times 20 = 2.24\ pu$$

Step 2: Zero Sequence with NGR

$$Z_{0,branch} = Z_T + 3Z_n = 0.1669 + j7.8881$$
$$Z_{0,DER} = 0.0556 + j2.6294$$

Step 3: New Thevenin

$$Z_{0,th} = 0.0350 + j0.9987$$

Step 4: Fault Current

$$I_{after} = 0.4032\ pu\ = 931\ A$$

Step 5: Final DI

$$DI = 100\left(1 - \frac{931}{1031}\right) = 9.69\%$$

Desensitization Index (DI) ≤ 10%; So, DI passed.

Step 6: Final CoG

$$CoG = 0.773$$

COG ≤ 0.8; So, COG passed.

Sequence Diagram:

Case 1

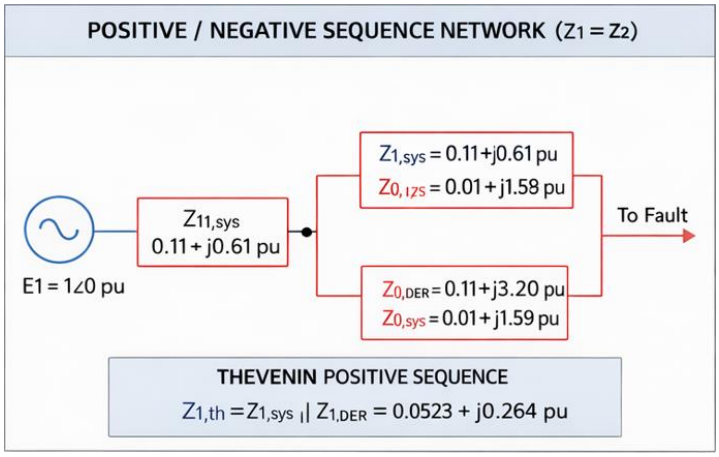

Case 2

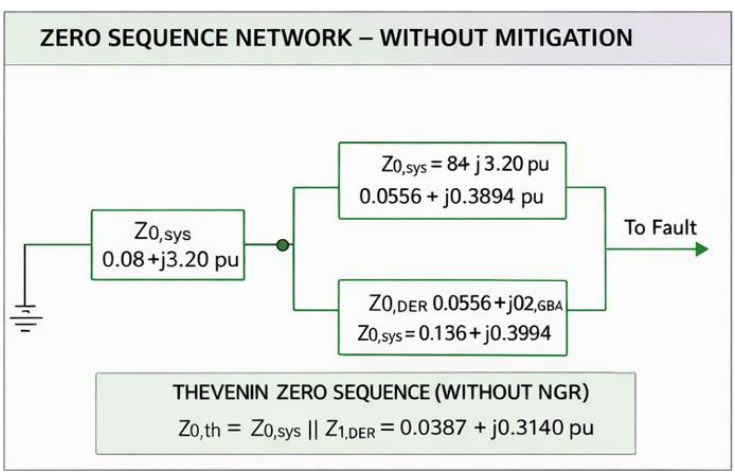

Case 3

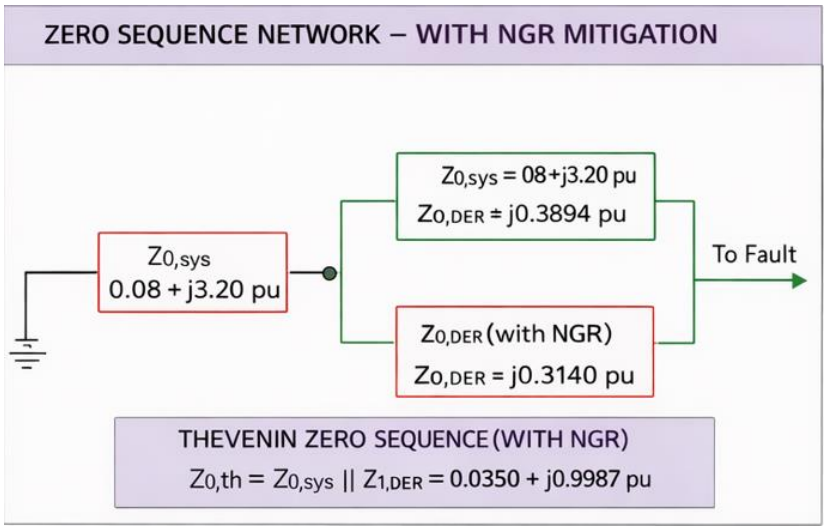

Short Circuit Analysis:

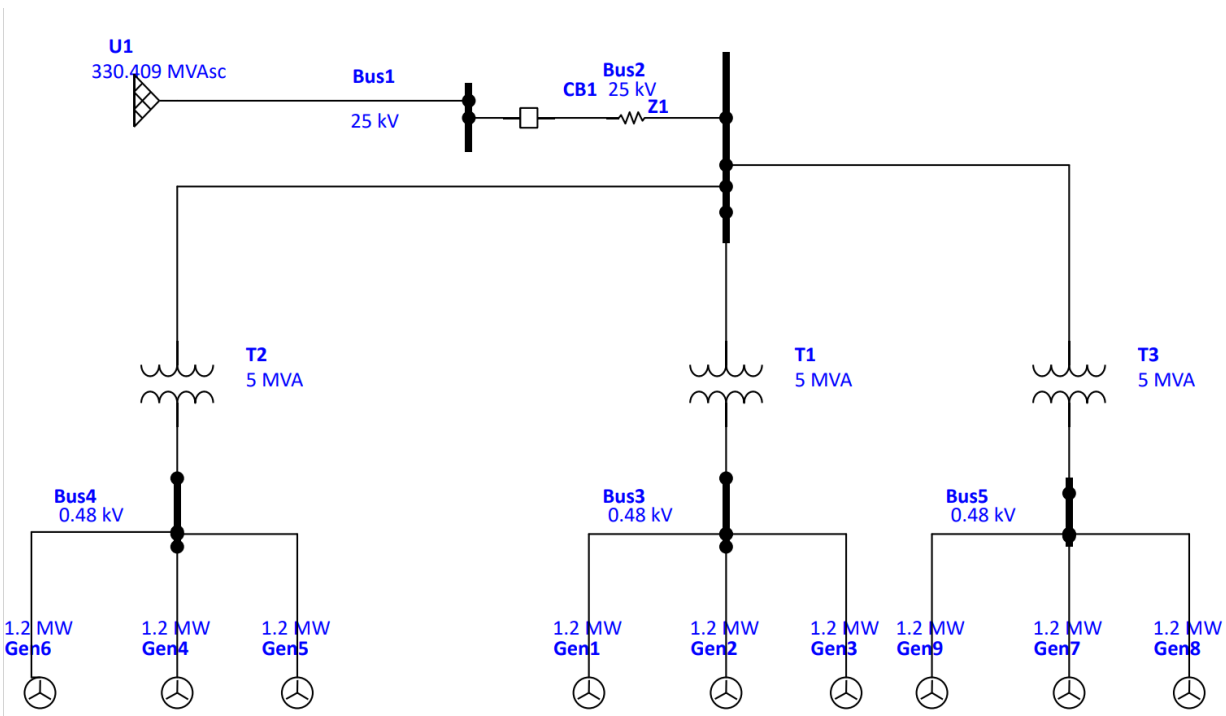

Fig1: Completed Model on Etap

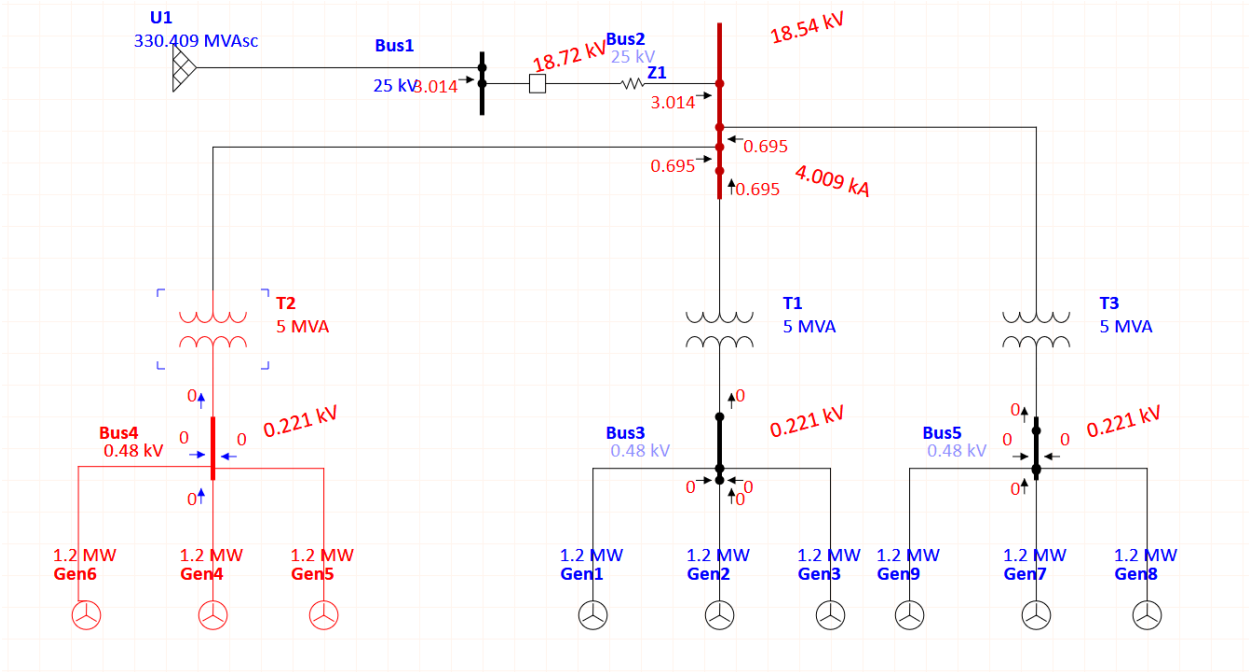

Fig 2 : Short Circuit Analysis Turning on the generators

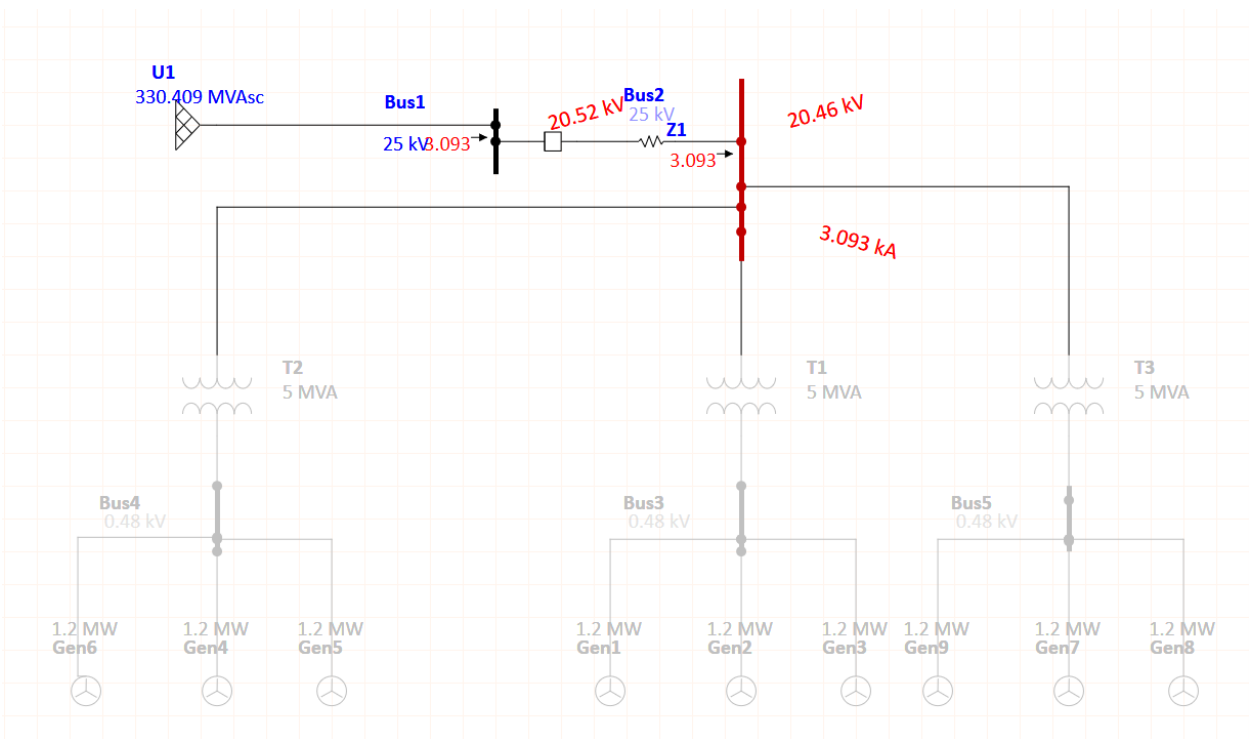

Fig 3 : Short Circuit Analysis Turning off the generators

Completed Interconnection Protection Settings and Commissioning Sheet

(Part 1 Only – Breaker Failure Section, IPSC Rev. 09 Page 7)

Standards basis: FortisAlberta DER-02 Version 6.1 (Revision Date April 16, 2025) and Interconnection Protection Settings & Commissioning, Rev. 09.

Breaker Failure Protection Provided	☑ Yes
Protection Function (ANSI Device Number)	50BF – Breaker Failure Protection
Breaker Failure (upon detection of a BF condition)	Pickup: ≤ 0.3 second Trip of secondary isolation point: < 2 seconds
Breaker Failure (BF) Scheme Description	Breaker failure protection is provided for the main DER interconnection breaker at the PCC/POC of the synchronous-generator DER facility. If an interconnection protection trip is issued to the main DER breaker and the breaker fails to clear the fault, the breaker failure logic shall operate after confirming that current remains present following the trip command and expected breaker clearing interval. The breaker failure scheme supervises the trip output of the interconnection protection system and verifies unsuccessful interruption by monitoring continued current flow through the interconnection breaker. If current remains present after the allowed clearing time, a breaker failure condition is declared. Upon declaration of breaker failure, the failed breaker shall be re-tripped and backup isolation of the DER facility shall be initiated by tripping the secondary/upstream isolation point to disconnect the DER from the FortisAlberta distribution system. Transfer/direct trip shall be applied where required by the final protection and control design. This breaker failure philosophy is intended to satisfy the FortisAlberta IPSC requirements of breaker failure pickup within 0.3 s and tripping of the secondary isolation point in less than 2 s. Breaker failure protection shall be indicated on the updated electrical single-line diagram with notes describing the protection philosophy.

SCADA Data Concentrator – DNP3 Points List

This DNP3 points list is prepared for the synchronous-generator DER plant shown in the project single-line diagram, using FortisAlberta DER-02 Annex C mapping philosophy and the professor's instruction to ignore the full IEEE 1547-2018 list and include only the points FortisAlberta asks for.

Applicable standard. FortisAlberta DER-02, Version 6.1, Revision Date April 16, 2025, as identified in the project package.

Required DNP3 Points

Category	Point Name	Include for This Project?	Comment
Binary Input	Trip / Fault Indication	Yes	Main DER facility breaker trip/fault indication at the PCC.
Binary Input	52A Breaker Status	Yes	Main PCC breaker open/closed status.
Binary Input	Phase A Fault	Yes	Fortis-required fault indication for DER system fault monitoring.
Binary Input	Phase B Fault	Yes	Fortis-required fault indication for DER system fault monitoring.
Binary Input	Phase C Fault	Yes	Fortis-required fault indication for DER system fault monitoring.
Binary Input	Ground Fault	Yes	Required and directly relevant to grounding and protection performance.
Binary Input	Close Block	Yes	Fortis explicitly requires close-block functionality for the main DER breaker.
Binary Input	RTU Relay Healthy	Yes	Health indication for the DER facility relay / controller / RTU.
Binary Input	Utility Fault	Yes	Upstream FortisAlberta system fault indication.
Binary Input	Supervisory Control (Local/Remote)	Yes	Fortis control commands are only valid when the controller is in REMOTE.
Binary Input	Aux. Battery Healthy	If applicable	Include only if the controller or RTU has battery backup.
Binary Input	Armed for FFR	Only if requested	Not required unless FortisAlberta specifically requests fast frequency response.
Binary Input	Armed for CR	Only if requested	Not required unless FortisAlberta specifically requests contingency reserve.
Binary Input	Individual Generator Status	Only if no central controller	Conditional point; not mandatory when plant-level reporting is provided at the PCC.

Control	Breaker Open	Yes	Remote trip command for the main PCC breaker.
Control	Breaker Close	Yes	Remote close command for the main PCC breaker, subject to REMOTE mode and close-block logic.
Control	Close Block Control	Yes	Required to enforce close-block logic.
Control	Local / Remote Mode Selection	Yes	Required supervisory control function.
Analog Input	PCC Voltage	Yes	Basic operational monitoring at the PCC.
Analog Input	PCC Current	Yes	Basic operational monitoring at the PCC.
Analog Input	Real Power (MW)	Yes	Plant export/import monitoring at the PCC.
Analog Input	Reactive Power (MVAr)	Yes	Required for operational visibility and power factor control verification.
Analog Input	Frequency	Yes	Basic plant supervision.
Analog Input	Power Factor	Yes	Included because Fortis currently requires constant power factor control for DERs.

- Breaker failure protection should not be listed as a DNP3 point unless FortisAlberta specifically requires it in the final site mapping. Breaker failure is a separate protection requirement in the IPSC breaker-fail section and on the updated SLD.
- Because the project SLD shows a single DER plant interface at the GFO/PCC, the preferred presentation is plant-level SCADA reporting at the PCC rather than utility-facing status points for all nine generators individually.
- The final commissioned point list and index assignment would be confirmed with FortisAlberta SCADA during detailed design and site commissioning.

For the proposed DER plant, the SCADA data concentrator shall provide the FortisAlberta-required DNP3 points at the main DER facility PCC interface. Based on the project SLD, the site is represented as a single DER plant connection at the GFO/PCC rather than as nine separate utility interconnection points; therefore, the required plant-level points include Trip/Fault Indication, 52A Breaker Status, Phase A/B/C Fault, Ground Fault, Close Block, RTU Relay Healthy, Utility Fault, and Supervisory Control (Local/Remote). Conditional points such as Aux. Battery Healthy, Armed for FFR, Armed for CR, and individual generator status shall only be included where applicable or specifically requested by FortisAlberta. In addition, the SCADA concentrator should provide basic PCC operational analog monitoring including voltage, current, MW, MVAr, frequency, and power factor for plant supervision and verification of constant power factor operation.