Journal of Combinatorial Theory, Series B 131 (2018) 138–169

Contents lists available at ScienceDirect

Journal of Combinatorial Theory, Series B

www.elsevier.com/locate/jctb

The Erdős–Pósa property for edge-disjoint immersions in 4-edge-connected graphs

Naonori Kakimura [a,1], Ken-ichi Kawarabayashi [b,2]

[a] *Department of Mathematics, Keio University, Japan*
[b] *National Institute of Informatics, and JST ERATO Kawarabayashi Large Graph Project, Japan*

ARTICLE INFO

Article history:
Received 30 January 2014
Available online 22 February 2018

Keywords:
Immersion
Packing
Covering
4-Edge-connected graphs

ABSTRACT

A graph H is *immersed* in a graph G if the vertices of H are mapped to distinct vertices of G, and the edges of H are mapped to paths joining the corresponding pairs of vertices of G, in such a way that the paths are pairwise edge-disjoint. In this paper, we show that the Erdős–Pósa property holds for packing edge-disjoint K_t-immersions in 4-edge-connected graphs. More precisely, for positive integers k and t, there exists a constant $f(k,t)$ such that a 4-edge-connected graph G has either k edge-disjoint K_t-immersions, or an edge subset F of size at most $f(k,t)$ such that $G-F$ has no K_t-immersion. The 4-edge-connectivity in this statement is best possible in the sense that 3-edge-connected graphs do not have the Erdős–Pósa property.

© 2018 Elsevier Inc. All rights reserved.

E-mail addresses: kakimura@math.keio.ac.jp (N. Kakimura), k_keniti@nii.ac.jp (K. Kawarabayashi).

[1] Supported by JST ERATO Grant Number JPMJER1201, and JSPS KAKENHI Grant Number JP17K00028.
[2] Supported by JST ERATO Grant Number JPMJER1201.

https://doi.org/10.1016/j.jctb.2018.02.003
0095-8956/© 2018 Elsevier Inc. All rights reserved.

1. Introduction

1.1. Erdős–Pósa property

A family $\mathcal{F}$ of graphs is said to have the *Erdős–Pósa property* if for every integer k there is an integer $f(k, \mathcal{F})$ such that every graph G contains either k vertex-disjoint (edge-disjoint, resp.) subgraphs each isomorphic to a graph in $\mathcal{F}$ or a set X of at most $f(k, \mathcal{F})$ vertices (edges, resp.) such that $G - X$ has no subgraph isomorphic to a graph in $\mathcal{F}$. The term *Erdős–Pósa property* arose because Erdős and Pósa [5] prove that the family of cycles has this property. Other families of graphs having the Erdős–Pósa property are the one of cycles of even length [26] and the one of (even) cycles through specified vertices [7,9,16]. Furthermore, there is the seminal result of Robertson and Seymour [18] which says that, for a fixed graph H, the family of H-minors has the Erdős–Pósa property if and only if H is planar.

In this paper, we investigate the Erdős–Pósa property for an edge-disjoint variant of minors for a fixed graph, called *immersions*. For two graphs G and H, an *immersion*[3] of H in G is a map η such that

- $\eta(v) \in V(G)$ for each $v \in V(H)$ and $\eta(u) \neq \eta(v)$ for distinct $u, v \in V(H)$
- for each edge $e = uv$ of H, $\eta(e)$ is a path of G from $\eta(u)$ to $\eta(v)$
- if $e, f \in E(H)$ are distinct, then $\eta(e)$ and $\eta(f)$ have no edges in common, although they may share vertices.

The image of η is called an *H-immersion*.

The immersion relation seems to be similar to the minor relation. In fact, structural approach has been extremely successful for immersions. Robertson and Seymour [23] extended their proof of the famous Wagner's conjecture [22] to prove that graphs are well-quasi-ordered by the immersion relation, which proves a conjecture of Nash-Williams. Recently, the immersion relation has attracted a lot of attention from the graph theory community [2,11,15,27].

Similarly to the minor case, the Erdős–Pósa property does not hold for edge-disjoint immersions of a fixed nonplanar graph. Indeed, consider finding edge-disjoint K_5-immersions. Let $G = (V, E)$ be a graph obtained from a toroidal wall with a large hole with some modification (see Figs. 1 and 2 for example). Then it is not difficult to see that there are no two edge-disjoint K_5-immersions, but we have to delete $\Omega(\sqrt{|V|})$ edges to make G have no K_5-immersion.

As seen in Figs. 1 and 2, the obstruction for K_t-immersions has some topology. Such "topological obstructions" also arise in other examples that do not satisfy the Erdős–Pósa property:

[3] This is often called a *weak immersion*. An immersion η is *strong* if $\eta(e)$ does not contain $\eta(v)$ when e is not incident with v.

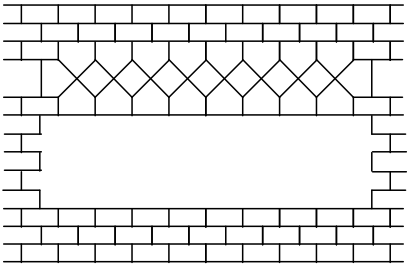

Fig. 1. A counterexample for the Erdős–Pósa property for K_5-immersions in 3-edge-connected graphs.

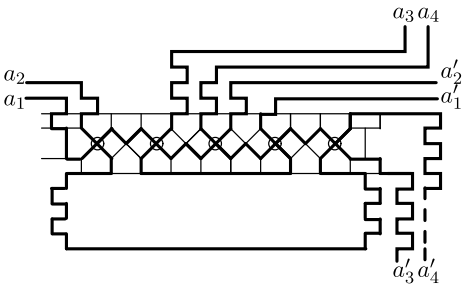

Fig. 2. The bold lines denote a K_5-immersion, where the circles correspond to the vertices in K_5.

1. **Odd cycles:** Consider a graph $G = (V, E)$ that is embedded in a projective plane of representativity $\Omega(\sqrt{|V|})$ such that each face has even length, and every noncontractible cycle has odd length. This graph has no two vertex-disjoint odd cycles, but $\Omega(\sqrt{|V|})$ vertices of G are needed to hit all odd cycles. The same is true if we consider "edge-disjoint" instead of "vertex-disjoint," because G can be a cubic graph.
2. **Minors:** Let H be a nonplanar graph and g the Euler genus of H. Let Σ be a surface of Euler genus g. If a graph $G = (V, E)$ is embedded in Σ with representativity $\Omega(\sqrt{|V|})$, then G has no two vertex-disjoint H-minors, but $\Omega(\sqrt{|V|})$ vertices of G are needed to hit all H-minors (since as long as the representativity is c_H for some constant that depends on only g and H, the graph G contains an H-minor, see [19]). The same is also true if we consider "edge-disjoint" instead of "vertex-disjoint," because G can be a cubic graph.

1.2. Four-edge-connectivity

We now consider 4-edge-connected graphs. In this case, the situation dramatically changes. The most important point is the above topological obstructions are gone when a graph is 4-edge-connected. In fact, the Erdős–Pósa property holds for edge-disjoint odd cycles [12] and edge-disjoint odd cycles through prescribed vertices [8] in 4-edge-connected graphs.

The main result of this paper is the following in the same flavor. In fact, the statement holds for a 3-*edge-cut-free graph*, which is a graph without a minimal edge-cut of size exactly three. We denote a clique of size t by K_t.

Theorem 1.1. *The Erdős–Pósa property holds for K_t-immersions in 4-edge-connected graphs(or 3-edge-cut-free graphs). More precisely, for any positive integers k and t, there exists an integer $f(k,t)$ such that every 4-edge-connected graph(or every 3-edge-cut-free graph) G satisfies one of the following:*

(a) *G has k edge-disjoint K_t-immersions,*
(b) *G has an edge set F of size at most $f(k,t)$ such that $G - F$ has no K_t-immersion.*

It should be noted that the proof of Theorem 1.1 in fact shows that the Erdős–Pósa property holds for immersions of a $(t-1)$-edge-connected $(t-1)$-regular graph.

Theorem 1.1 can be compared to the analogous result [4] for the minor case as below.

Theorem 1.2 *([4]). For any integers k and $p\,(\geq 5)$, there exists an integer $f(k,p)$ such that every $(k(p-3)+14p+14)$-connected graph G satisfies one of the following:*

(a) *G has k vertex-disjoint K_p-minors,*
(b) *G has a vertex set X of size at most $f(k,p)$ such that $G - X$ has no K_p-minor.*

When p is a fixed constant, the connectivity bound in Theorem 1.2 is best possible up to an additive constant. Indeed, for each integer p, there is a constant c_p such that for all integers k and n, there are $(k(p-3)-c_p)$-connected graphs that do not contain k vertex-disjoint K_p-minors but in which no set of at most n vertices kills all their K_p-minors. Hence it is not possible to define a function $f(k,p)$ as in Theorem 1.2 that makes the theorem true for all $(k(p-3)-c_p)$-connected graphs.

In contrast, our main result (Theorem 1.1) only needs 4-edge-connectivity, which clearly does not depend on k or t. We also remark that the 4-edge-connectivity is best possible, as we have shown above.

We here describe a proof sketch of Theorem 1.1. The key property which a 4-edge-connected (or 3-edge-cut-free) graph G satisfies is the following (see Lemma 3.3) due to [10]: if G has large tree-width, i.e., G has a wall W of large height, then either

1. there is a vertex of big degree,
2. there is a big clique minor, or
3. there is a flat subwall W' of W. Moreover, this subwall W' contains a big clique minor in the line graph $L(G)$.

All the three cases yield a large clique minor in the line graph, which is useful to construct K_t-immersions. Indeed, the proofs in [12] use these structures to show the Erdős–Pósa

property for odd cycles in 4-edge-connected graphs. In this paper, it turns out that the 4-edge-connectivity is not really necessary to satisfy one of the above three cases. We relax 4-edge-connected graphs to graphs satisfying one of the three cases, and show the Erdős–Pósa property of K_t-immersions for those graphs. See a more detailed overview in Section 3.

When $t = 5$, the proof can be made simpler. The following theorem asserts that a 4-edge-connected graph (or a 3-edge-cut-free graph) whose tree-width is at least some polynomial in k always has k edge-disjoint K_5-immersions.

Theorem 1.3. *For a positive integer k, there exists a polynomial $c(k)$ such that a 4-edge-connected graph (or a 3-edge-cut-free graph) with tree-width greater than $c(k)$ has k edge-disjoint K_5-immersions.*

Let us remark that Chudnovsky, Dvořák, Klimošová, and Seymour [2] proved that every graph with tree-width $g(x)$ (for some function g) contains an $x \times x$ grid as an immersion. Since every 13×13 grid contains a K_5-immersion, this implies that every graph with tree-width at least $g(13k)$ has k edge-disjoint K_5-immersions.

This paper is organized as follows. Section 2 describes notation and definitions. In Section 3, we provide a proof sketch for the Erdős–Pósa property for edge-disjoint K_t-immersions (Theorem 1.1). The key lemma to prove Theorem 1.1 is showed in Section 4. Using the lemma, we show the Erdős–Pósa property for the bounded tree-width case in Section 5, and for the other case in Section 6. Finally, we discuss finding K_5-immersions in a 4-edge-connected graph with large tree-width in Section 7.

2. Preliminaries

Let G be a graph, and $V(G)$, $E(G)$ be its vertex set and edge set, respectively. Throughout this paper, we suppose that G has no loops. A *separation* (A, B) of G is an ordered pair of edge-disjoint subgraphs of G such that $G = A \cup B$, and there are no edges between $A - V(B)$ and $B - V(A)$. The *order* of the separation (A, B) is $|V(A) \cap V(B)|$. For a vertex set X in G, let $\delta_G(X)$ be the set of edges between X and $V(G) \setminus X$ in G, and such an edge set is called an *edge-cut* in G. Note that when X is empty, $\delta_G(X) = \emptyset$. For a vertex set X, we denote by $G[X]$ the subgraph induced by X.

2.1. Graph minor theory

In this section, we review definitions and notation in graph minor theory.

Tree-width Let G be a graph, T a tree and let $\mathcal{V} = \{V_u \subseteq V(G) \mid u \in V(T)\}$ be a family of vertex sets $V_u \subseteq V(G)$ indexed by the vertices u of T. The pair $(T, \mathcal{V})$ is called a *tree decomposition* of G if it satisfies (i) $V(G) = \bigcup_{u \in V(T)} V_u$, (ii) for every edge

$e \in E(G)$ there exists a vertex $u \in V(T)$ such that both ends of e lie in V_u, and (iii) if $u, u', u'' \in V(T)$ and u' lies on the path of T between u and u'', then $V_u \cap V_{u''} \subseteq V_{u'}$. The *width* of $(T, \mathcal{V})$ is the number $\max\{|V_u| - 1 \mid u \in V(T)\}$ and the *tree-width* $\mathrm{tw}(G)$ of G is the minimum width of any tree decomposition of G. Sometimes we refer V_u to as a *bag*.

Tangle For a positive integer r, a *tangle of order* r in a graph G is a family $\mathcal{T}$ of separations (A, B) of order $< r$ such that (i) if (A, B) is a separation of G of order $< r$, then $\mathcal{T}$ contains one of (A, B) and (B, A) (ii) if $(A_1, B_1), (A_2, B_2), (A_3, B_3) \in \mathcal{T}$, then $A_1 \cup A_2 \cup A_3 \neq G$, and (iii) if $(A, B) \in \mathcal{T}$ then $V(A) \neq V(G)$.

Clique minor Let G be a graph, and K_t be a clique with size t. A *clique minor of order* t in G is a function η with domain $V(K_t) \cup E(K_t)$ satisfying:

(i) for each $v \in V(K_t)$, $\eta(v)$ is a subgraph in G that is a tree, and, for distinct $u, v \in V(K_t)$, $\eta(u)$ and $\eta(v)$ are disjoint.
(ii) for each $e = uv \in E(K_t)$, $\eta(e)$ is an edge in G that connects vertices of $\eta(u)$ and $\eta(v)$.

We call $\eta(v)$ a *clique node* of η. The *image* of η is the subgraph consisting of the union of all the clique nodes and $\eta(e)$ for all $e \in E(K_t)$. We often call the image itself a K_t*-minor*. For a tangle $\mathcal{T}$ of order at least t, we say that a K_t-minor is *attached to* $\mathcal{T}$ if $B - V(A)$ contains some clique node for any separation $(A, B) \in \mathcal{T}$ of order less than t.

Walls Let h be a positive integer. An *elementary wall of height* h, denoted by W_h, is a graph defined as follows. The vertex set is $V(W_h) = \{(i, j) \mid 0 \leq i \leq h,\ 0 \leq j \leq 2h + 1\} \setminus \{(0, 2h + 1), (h, 2h + 1)\}$ if h is odd, and $V(W_h) = \{(i, j) \mid 0 \leq i \leq h,\ 0 \leq j \leq 2h + 1\} \setminus \{(0, 2h + 1), (h, 0)\}$ if h is even. Two vertices (i, j) and (i', j') are adjacent if and only if one of the following possibilities holds: (1) $i' = i$ and $j' \in \{j - 1, j + 1\}$ and (2) $j' = j$ and $i' = i + (-1)^{i+j}$. A *wall of height* h is a graph which is isomorphic to a subdivision of W_h.

The *nails* of a wall are the vertices of degree three within it. A cycle of length six in W_h is called a *brick* of W_h. The ith *horizontal path* of W_h is a path in W_h consisting of vertices with the same first coordinate i. The jth *vertical path* of W_h is a path in W_h consisting of vertices $(0, 2j), (1, 2j), (1, 2j + 1), (2, 2j + 1), (2, 2j), (3, 2j), \ldots$ for an integer j. We can define bricks, horizontal paths, and vertical paths of a wall similarly. A *subwall* of a wall W is a wall which is a subgraph of W. The ith *level* of W is a subgraph consisting of all bricks between the $(i - 1)$th and ith horizontal paths. For a wall W, a subwall of height h is *proper* if it consists of h consecutive bricks from each of h consecutive levels of W.

Let W be a wall of height h. For any separation (A, B) of order less than h, only one of $A - V(B)$ and $B - V(A)$ contains some horizontal path of W. Let $\mathcal{T}_W$ be the family of

such separations (A, B) of order less than h such that $B - V(A)$ contains some horizontal path of W. Then $\mathcal{T}_W$ is known to form a tangle of order h. For a tangle $\mathcal{T}$ of order at least h, we say that a wall of height h is *attached to* $\mathcal{T}$ if $\mathcal{T}_W \subseteq \mathcal{T}$, that is, if $B - V(A)$ contains some horizontal path of W for any separation $(A, B) \in \mathcal{T}$ of order less than h.

Robertson, Seymour, and Thomas [24] proved the following proposition (see also [3, 13,17]).

Proposition 2.1 *(Robertson, Seymour, and Thomas [24]). Let $h \geq 2$, and $\mathcal{T}$ be a tangle of order $\geq 20^{h^4(2h-1)}$. Then there exists a wall of height h which is attached to $\mathcal{T}$.*

Recently, the bound was improved to a polynomial size [1].

Let W be a wall of height at least three in a graph G. The wall W has a unique planar embedding. The *perimeter* of W, denoted by $\mathrm{per}(W)$, is the boundary of the unique face in this embedding which contains more than six nails. There is a unique component U of $G - V(\mathrm{per}(W))$ containing $W - V(\mathrm{per}(W))$. We call U the *interior* of W, denoted by $\mathrm{int}(W)$. The *compass* of W, denoted $\mathrm{comp}(W)$, consists of the graph with vertex set $V(\mathrm{int}(W)) \cup V(\mathrm{per}(W))$ and edge set $E(\mathrm{int}(W)) \cup E(\mathrm{per}(W)) \cup \{(x, y) \in E(G) \mid x \in V(\mathrm{int}(W)), y \in V(\mathrm{per}(W))\}$. We say a proper subwall W' of W is *dividing* in G if the compass of W' in G is disjoint from $W - W'$. A wall is *flat* if its compass does not contain two vertex-disjoint paths connecting the diagonally opposite corners. It is easy to see that any proper subwall of a flat wall must be both flat and dividing.

Proposition 2.2 *(Robertson–Seymour [21]). For any integers $t \geq 0$ and $h \geq 2$, there is a computable constant $h^*(t, h)$ satisfying the following. Suppose that we are given a graph G and a wall W of height at least $h^*(t, h)$ in G. Then G has either*

- *a clique minor of order t which is attached to $\mathcal{T}_W$, or*
- *a vertex subset $X \subseteq V(G)$ of size at most $\binom{t}{2}$ and a proper subwall of height h which is flat in $G - X$.*

Giannopoulou and Thilikos [6] proved that $h^*(t, h)$ is linear on h when $|X|$ is at most $t - 5$. When the size of X is $O(t^{24})$ instead of $\binom{t}{2}$, the value $h^*(t, h)$ is $O(t^{24}(t^2 + h))$, which is a polynomial in t and h [14].

Free set Given a tangle $\mathcal{T}$ in a graph G of order r, a vertex set $X \subseteq V(G)$ is *free with respect to* $\mathcal{T}$ if there does not exist $(A, B) \in \mathcal{T}$ of order strictly less than $|X|$ such that $X \subseteq V(A)$.

The following theorem is a slightly reformulated statement of [23]. For a vertex set Z, $\mathcal{T} - Z$ is defined as the set of separations (A', B') of $G - Z$ such that there exists a separation $(A, B) \in \mathcal{T}$ such that $Z \subseteq V(A \cap B)$, $A - Z = A'$, and $B - Z = B'$ hold. It is known that $\mathcal{T} - Z$ is a tangle [20].

Theorem 2.3 *(Marx–Wollan [15] (see also [23])). Let k, q be positive integers, G a graph, and $\mathcal{T}$ a tangle in G of order r with $r \geq (k+q)^{k+1} + k$. Let $\{X_j \subseteq V(G) \mid j \in J\}$ be a family of subsets in $V(G)$ indexed by some set J with $|X_j| = k$ for all $j \in J$. Let $J' \subseteq J$ be a set such that*

1. *for all distinct $j, j' \in J'$, X_j and $X_{j'}$ are disjoint.*
2. *$X = \bigcup_{j \in J'} X_j$ is free.*
3. *$|X|$ is maximized subject to 1. and 2.*

Then if $|X| < q$ then there exists a set Z of $V(G)$ with $X \subseteq Z$ and $|Z| \leq (k+q)^{k+1}$ such that

4. *for all $j \in J$, either $X_j \cap Z \neq \emptyset$ or X_j is not free in $\mathcal{T} - Z$.*

3. Overview of Proof of Theorem 1.1

In this section, we give a proof sketch of our main theorem. We say that an edge subset F in a graph G is a *hitting edge set* if F intersects every K_t-immersion, i.e., $G - F$ has no K_t-immersion. Theorem 1.1 can be restated as follows: for every 4-edge-connected graph G, either

(a) G has k edge-disjoint K_t-immersions, or
(b) G has a hitting edge set of size at most $f(k, t)$.

We divide the proof into two cases, depending on the tree-width of G.

First suppose that the tree-width of a graph G is small, depending only on k and t. We will show that the Erdős–Pósa property holds for such graphs, which are not necessarily 4-edge-connected. An important observation is that G has no small edge set whose deletion yields two components X and Y both of which contain a K_t-immersion, because otherwise the induction works for X and Y (see Lemma 5.2 in Section 5). Thus, for any small edge set F, $G - F$ has exactly one component that contains a K_t-immersion. This allows us to define a tangle $\mathcal{T}$ of large order in the line graph $L(G)$; for a separation (A, B) of small order in $L(G)$, we define $(A, B) \in \mathcal{T}$ if only $B - V(A)$ contains the line graph of some K_t-immersion in G. Moreover, the tangle $\mathcal{T}$ implies a large clique minor attached to $\mathcal{T}$ in $L(G)$ by Propositions 2.1 and 2.2 (see Section 5). These structures imply the Erdős–Pósa property by the following lemma, whose proof can be found in Section 4.

Lemma 3.1. *For any positive integers k and t, there exist integers $d(k, t)$ and $g(k, t)$ satisfying the following. Let $\mathcal{T}$ be a tangle of order $r > d(k, t)$ in the line graph $L(G)$ such that, for each separation $(A, B) \in \mathcal{T}$ in $L(G)$, only $B - V(A)$ contains the line graph*

of some K_t-immersion of G. Suppose that $L(G)$ has a clique minor K of order $d(k,t)$ which is attached to $\mathcal{T}$.

Then, if G has no k edge-disjoint K_t-immersions, then the size of a minimum hitting edge set is bounded by $g(k,t)$.

See Section 5 for a more detailed proof for the small tree-width case.

Therefore, it suffices to consider the case when a graph G is 4-edge-connected (or 3-edge-cut-free) and the tree-width is large. This case also makes use of Lemma 3.1 by finding a tangle and an attached clique minor in the line graph $L(G)$. However, it is not easy to find a tangle in $L(G)$ as in the small tree-width case; even if G has a small edge set F whose deletion separates two components X and Y both containing a K_t-immersion, the induction does not work, because X and Y are not necessarily 4-edge-connected.

We overcome this difficulty by relaxing 4-edge-connectivity based on structures of the line graph. First, let us state the following result [10, Theorem 4.1] (see also [2,12]).

Proposition 3.2. *Let d be a positive integer. Then there exists an integer $\theta(d)$ satisfying the following. If a 4-edge-connected (or 3-edge-cut-free) graph G has a wall W of height $\theta(d)$, then the line graph $L(G)$ has a K_d-minor. Moreover, there exist d edge-disjoint paths in G from the subgraphs corresponding to different clique nodes to different nails of W.*

The key observation to prove Proposition 3.2 was the following, which follows from Proposition 2.2.

Lemma 3.3. *Let d, h be positive integers. There exists an integer $f_0(d,h)$ satisfying the following. Suppose that a graph G has a wall W of height $f_0(d,h)$. Then one of the following happens.*

1. *G has a vertex v such that there exist d edge-disjoint paths in G from v to different nails of W,*
2. *G has a K_d-minor K such that there exist d edge-disjoint paths in G from different clique nodes of K to different nails of W, and*
3. *G has a flat subwall W' of height h.*

The line graph $L(G)$ has a desired K_d-minor if (1) or (2) holds in Lemma 3.3. The reason why we need 4-edge-connectivity to obtain a K_d-minor in $L(G)$ is concerning the third condition.

We will show that the condition of 4-edge-connectivity can be relaxed to the conditions in Lemma 3.4 below. Here, for the planar embedding of a wall W, define a distance function d_W for two points x, y of the embedding so that $d_W(x,y)$ is the minimum number of regions that an arc in the plane with endpoints x and y intersects. We define the distance between two subgraphs W_1, W_2 of W by $d_W(W_1, W_2) = \min\{d_W(x,y) \mid x \in V(W_1),\ y \in V(W_2)\}$.

Lemma 3.4. *For any positive integer d, define $\alpha = 2d^3 + 1$ and $\beta = 4d$. Suppose that a graph G has a flat wall W of height at least $\alpha(\beta+2)$, which has disjoint proper subwalls $W_1, \dots, W_\alpha$ of height 2 such that $\mathrm{comp}(W_i)$ contains two edge-disjoint paths connecting the diagonally opposite corners of W_i, and $d_W(W_i, W_j) \geq \beta$ for each distinct i, j.*

Then, $L(G)$ has a K_d-minor K such that there exist d edge-disjoint paths in G from the subgraphs corresponding to different clique nodes of K to different nails of W.

The proof of Lemma 3.4 can be found in Section 6.1.

Note that, if G is 4-edge-connected (or 3-edge-cut-free), then every subwall of height 2 in a flat wall satisfies the conditions in Lemma 3.4. This follows from the 4-edge-connectivity (or 3-edge-cut-freeness) of G and the characterization of the feasibility of the two edge-disjoint paths problem in [25]. Hence, if G has a flat subwall W' of height at least $(2d^3 + 1)(4d + 2)$, we can find a desired K_d-minor in $L(G)$ for the case 3 in Lemma 3.3.

Lemma 3.4 allows us to relax the 4-edge-connectivity as follows. Define the functions $f_i(k,t)$ $(i = 1, 2, 3)$ to be

$$f_1(k,t) = f_1(k-1,t) + d(k,t), \quad f_2(k,t) = 4f_1(k,t), \text{ and } f_3(k,t) = 2(f_1(k,t))^3 + 1,$$

where we define $f_1(0,t) = 0$ and $d(k,t)$ is an integer defined in Lemma 3.1. Define $h_0 = f_0(f_1(k,t), f_3(k,t)\cdot(f_2(k,t)+2))$, where f_0 is the function in Lemma 3.3. Moreover, fix w to be an integer satisfying

$$w \geq 20^{2h_0^5}. \tag{1}$$

Suppose $\mathcal{G}_{k,t,w}$ consists of graphs G of tree-width less than w and graphs G of tree-width at least w that satisfy the following: for each wall W of height h_0 in G, either

(I) G has a vertex v such that there exist $f_1(k,t)$ edge-disjoint paths in G from v to different nails of W,
(II) G has a K_y-minor K, where $y \geq f_1(k,t)$, such that there exist $f_1(k,t)$ edge-disjoint paths in G from different clique nodes of K to different nails of W, or
(III) G has a flat subwall W' of height $f_3(k,t)(f_2(k,t)+2)$ in W. Moreover, W' has proper subwalls $W_1, \dots, W_{f_3(k,t)}$ of height 2 such that $\mathrm{comp}(W_i)$ contains two edge-disjoint paths connecting the diagonally opposite corners of W_i and $d_W(W_i, W_j) \geq f_2(k,t)$ for each distinct i, j.

Note that, by applying Lemma 3.4 for the case (III), in either case, $L(G)$ has a $K_{f_1(k,t)}$-minor K such that there exist $f_1(k,t)$ edge-disjoint paths in G from the subgraphs corresponding to different clique nodes of K to different nails of W.

We show the Erdős–Pósa Property for graphs in $\mathcal{G}_{k,t,w}$, instead of 4-edge-connected graphs.

Theorem 3.5. *Let k, t be positive integers, and w be an integer satisfying (1). Then there exists an integer $f'(k,t,w)$ such that, for any graph G in $\mathcal{G}_{k,t,w}$, either there are k edge-disjoint K_t-immersions, or there exists a hitting edge set F of size at most $f'(k,t,w)$.*

Assuming the above theorem, we obtain Theorem 1.1.

Proof of Theorem 1.1. Let G be a 4-edge-connected (or 3-edge-cut-free) graph. It suffices to show that G is in $\mathcal{G}_{k,t,w}$, where w satisfies (1). We may assume that G has tree-width at least w. By Proposition 2.1, G has a wall of height $h_0 = f_0(f_1(k,t), f_3(k,t)\cdot(f_2(k,t)+2))$. It follows from Lemma 3.3 that G satisfies (I), (II) in the conditions of $\mathcal{G}_{k,t,w}$, or G has a flat subwall of height $f_3(k,t)(f_2(k,t)+2)$. Since, for every flat wall W' of height 2, $\mathrm{comp}(W')$ contains two edge-disjoint paths connecting the diagonally opposite corners of W', the flat subwall satisfies (III) in the conditions of $\mathcal{G}_{k,t,w}$. Thus G is in $\mathcal{G}_{k,t,w}$. □

The proof of Theorem 3.5 is given in Section 6.2. The key observation is that, in a similar way to the small tree-width case, G has no edge set of size at most $d(k,t)$ whose deletion separates two components X and Y both containing a K_t-immersion (see Lemma 6.1 for details). This defines a tangle of large order in $L(G)$. If $L(G)$ has a clique minor of large order which is attached to $\mathcal{T}$, then Lemma 3.1 guarantees the Erdős–Pósa property. Otherwise, we can obtain a tree decomposition of $L(G)$ the size of whose bags is bounded by k and t except for some leaf bags. By extending a proof in [26] for the bounded tree-width case, the size of a minimum hitting edge set is bounded if G has no k edge-disjoint K_t-immersions.

4. Proof of key lemma (Lemma 3.1)

In this section, we describe a proof of Lemma 3.1.

Lemma 3.1. *For any positive integers k and t, there exist integers $d(k,t)$ and $g(k,t)$ satisfying the following. Let $\mathcal{T}$ be a tangle of order $r > d(k,t)$ in the line graph $L(G)$ such that, for each separation $(A,B) \in \mathcal{T}$ in $L(G)$, only $B - V(A)$ contains the line graph of some K_t-immersion of G. Suppose that $L(G)$ has a clique minor K of order $d(k,t)$ which is attached to $\mathcal{T}$.*

Then, if G has no k edge-disjoint K_t-immersions, then the size of a hitting edge set is bounded by $g(k,t)$.

We will show that, if $d(k,t) \geq t(t+t^2k)^t + 2tk$, then the statement of the lemma holds. To prove this, we need the following theorem.

Theorem 4.1 *(Robertson and Seymour [21], Theorem (5.4)). Let $s_1, \ldots, s_m, t_1, \ldots, t_m$ be the terminals in a given graph G. If there is a clique minor of order at least $3m$ in G, and there is no separation (A,B) of order at most $2m-1$ in G such that A contains all*

the terminals and $B - V(A)$ contains at least one clique node of the clique minor, then there are vertex-disjoint paths P_i with two ends in s_i, t_i for $i = 1, \dots, m$.

We slightly modify G by adding a degree-one vertex to each vertex of G. We denote by E' the set of the added edges, and by G' the resulting graph. For each vertex v in G, we denote by e_v the edge of E' incident to v. An important observation for the graph G' is the following.

(i) $\mathrm{tw}(G) = \mathrm{tw}(G')$, and
(ii) G has k edge-disjoint K_t-immersions if $L(G')$ has k vertex-disjoint K_t-subdivisions each of whose terminals belongs to E'.

Define a family $\mathcal{T}'$ of separations of order $< r$ in $L(G')$ such that $(A, B) \in \mathcal{T}'$ if and only if $(A - E', B - E') \in \mathcal{T}$. Then $\mathcal{T}'$ is a tangle of order r in $L(G')$.

Define a $(t-1)$-*star* in a graph to be a set F of $(t-1)$ edges for which there exists a vertex u such that every edge in F has u as an endpoint. A vertex incident with all the edges in a $(t-1)$-star is called a *center*. Let $\{X_j \mid j \in J\}$ be the set of all the $(t-1)$-stars in G' one edge of which is in E'. Then $|X_j| = t-1$ holds for every $j \in J$. Note that each X_j forms a clique of order $(t-1)$ in $L(G')$, which has one vertex in E'.

We apply Theorem 2.3 to the tangle $\mathcal{T}'$ and the sets $\{X_j \mid j \in J\}$ in $L(G')$. Let $J' \subseteq J$ be the subset satisfying 1–3, and let $X = \bigcup_{j \in J'} X_j$. Any X_j and $X_{j'}$ for distinct $j, j' \in J'$ are disjoint.

First suppose that $|X| \geq t^2 k$. Then there is a natural way to label elements of X by $s_1, t_1, s_2, t_2, \dots, s_m, t_m$, where $m = kt(t-1)/2$, such that if there exist pairwise vertex-disjoint paths $P_1, P_2, \dots, P_m$ in $L(G')$ such that P_i connects s_i and t_i, then $L(G')$ admits k vertex-disjoint K_t-subdivisions satisfying (ii). For any separation (A, B) of order less than $|X|$ in $L(G')$, if $B - V(A)$ contains at least one clique node of K, then $(A, B) \in \mathcal{T}'$ holds, and hence $V(A)$ does not contain X because X is free with respect to $\mathcal{T}'$. Therefore, since K has order at least $3|X|$, it follows from Theorem 4.1 that there exist such paths $P_1, P_2, \dots, P_m$, and hence G has k edge-disjoint K_t-immersions by (ii).

Thus we may assume that $|X| < t^2 k$. Then there exists a set $Z \subseteq E(G')$ with $|Z| \leq (t + t^2 k)^t$ satisfying 4 in Theorem 2.3. That is, each X_j satisfies either $X_j \cap Z \neq \emptyset$ or X_j is not free in $\mathcal{T}' - Z$.

It follows that $L(G') - Z$ has a clique minor K' of order at least $d(k, t) - |Z|$ in $K - Z$, which is attached to $\mathcal{T}' - Z$. For a vertex set U of G, we define the *canonical separation* (A, B) *in* $L(G)$ *for* U to be $A = L[E(G[U]) \cup \delta_G(U)]$ and $B = L[E(G - U) \cup \delta_G(U)] - E(L[\delta_G(U)])$, where L denotes $L(G)$. That is, A is the line graph of $E(G[U]) \cup \delta_G(U)$, and B is the remaining graph such that $V(A \cap B)$ is $\delta_G(U)$. The order is equal to $|\delta_G(U)|$.

Claim 4.2. *The vertex set $V(G)$ has a partition into vertex subsets $M_0, M_1, \dots, M_\ell$ such that*

(a) *M_0 has at most $|Z|$ vertices with degree at least $t-1$ in $G-Z$.*
(b) *$|\delta_{G-Z}(M_j)| \leq t-2$ holds for $j = 1, \ldots, \ell$.*
(c) *If (A_j, B_j) is the canonical separation of $L(G)$ for M_j, then $(A_j, B_j) \in \mathcal{T}$ for $j = 1, \ldots, \ell$.*
(d) *Each M_j for $j = 1, \ldots, \ell$ has $|\delta_{G-Z}(M_j)|$ edge-disjoint paths from a vertex in M_j to the edges $\delta_{G-Z}(M_j)$ in $G[M_j]$.*

Proof. Let w be a vertex of degree at least $t-1$ in $G-Z$. Suppose that e_w is not in Z. Then there is at least one X_j with $e_w \in X_j$ that is disjoint from Z. Since X_j is not free in $\mathcal{T}' - Z$, there exists a separation $(A, B) \in \mathcal{T}' - Z$ of order less than $t-1$ in $L(G') - Z$ such that $V(A)$ contains X_j. Define $F_w = V(A) \cap V(B) \setminus E'$, which is an edge subset of size at most $t-2$ in $G-Z$. Then $G - Z - F_w$ has at least two components; one contains some edge in $\delta_{G-Z}(w) \setminus F_w$, i.e., contains w, and the other contains a subgraph corresponding to some clique node of K'. Let U_w be the vertex set of the component containing w in $G - Z - F_w$. Note that $L(G[U_w])$ does not contain a clique node of K'. We take such F_w so that $|F_w|$ is minimum, and in addition U_w is minimal.

It is not difficult to see that $\{U_w \mid e_w \notin Z\}$ forms a laminar family. Indeed, assume to the contrary that there exist two vertices $w, w' \in V(G)$ such that $U_w \cap U_{w'} \neq \emptyset$, $U_w \setminus U_{w'} \neq \emptyset$, and $U_{w'} \setminus U_w \neq \emptyset$. We denote $\delta = \delta_{G-Z}$ for simplicity. First suppose that $w \in U_w \cap U_{w'}$. Then $|\delta(U_w \cap U_{w'})| > |\delta(U_w)|$ holds by the minimality of U_w. Since $|\delta(U_w)| + |\delta(U_{w'})| \geq |\delta(U_w \cap U_{w'})| + |\delta(U_w \cup U_{w'})|$ by the submodularity, we obtain $|\delta(U_w \cup U_{w'})| < |\delta(U_{w'})|$. The clique minor K' has a clique node disjoint from $\delta(U_w) \cup \delta(U_{w'})$. This clique node is disjoint from $\delta(U_w \cup U_{w'})$, and not contained in $L(G[U_w \cup U_{w'}])$, which contradicts the minimality of $|F_{w'}|$. A similar argument holds when $w' \in U_w \cap U_{w'}$. Hence we may suppose that $w \in U_w \setminus U_{w'}$ and $w' \in U_{w'} \setminus U_w$. Then, by counting argument, we see[4] that $|\delta(U_w)| + |\delta(U_{w'})| \geq |\delta(U_w \setminus U_{w'})| + |\delta(U_w \setminus U_{w'})|$. Since $|\delta(U_w)| < |\delta(U_w \setminus U_{w'})|$ and $|\delta(U_{w'})| < |\delta(U_{w'} \setminus U_w)|$ by the minimalities of U_w and $U_{w'}$, this is a contradiction. Thus the collection of U_w's forms a laminar family.

Take the family of maximal sets in $\{U_w \mid e_w \notin Z\}$, which we denote by $M_1, \ldots, M_\ell$. Then (b) and (d) of the claim hold by the construction. The condition (c) holds because the size of $Z \cup \delta_{G-Z}(M_j)$ is at most $|Z| + t - 2 < d(k, t)$. Moreover, if a vertex w with degree at least $t-1$ is not in $M_1, \ldots, M_\ell$, then e_w has to be contained in Z. Hence the number of vertices with degree at least $t-1$ that are not in $M_1, \ldots, M_\ell$ is at most $|Z \cap E'| \leq |Z|$, which implies (a). Thus the statement holds by letting $M_0 = V(G) \setminus \bigcup_{j=1}^{\ell} M_j$. $\square$

Note that $G[M_j]$ does not contain a K_t-immersion by the assumption of Lemma 3.1, since the canonical separation (A_j, B_j) of $L(G)$ for M_j is in $\mathcal{T}$.

Assume that every K_t-immersion in $G - Z$ has no branch vertices in some M_j ($j = 1, \ldots, \ell$) with $|M_j| \geq 2$, where a *branch vertex* of a K_t-immersion η is a vertex in $\{\eta(v) \mid v \in V(K_t)\}$. Then contracting M_j does not affect either the number of edge-

[4] This inequality is called the *posi-modular inequality*.

disjoint K_t-immersions in $G - Z$ or the size of a minimum hitting edge set, because of Condition (d) in Claim 4.2. Note that the operation keeps the orders of a tangle and a clique minor in the line graph.

Thus we may suppose that, for each M_j with $|M_j| \geq 2$, it has a branch vertex of some K_t immersion in $G - Z$. If some of branch vertices of a K_t-immersion are in M_j, then all the branch vertices are in M_j since $|\delta_{G-Z}(M_j)| \leq t-2$. Hence $G-Z$ has a K_t-immersion all of whose branch vertices are contained in M_j. We suppose that $M_1, \ldots, M_{\ell'}$ have at least two vertices by relabeling ($\ell' \leq \ell$).

Claim 4.3. *There exists an edge set D of size at most $(t-2)(t+t^2k)^t$ such that $V(G)$ has a partition into vertex subsets $N_0, N_1, \ldots, N_n$ such that*

(a') *N_0 has at most $|D|$ vertices with degree at least $t-1$ in $G - D$.*
(b') *$|\delta_{G-D}(N_j)| \leq 1$ holds for $j = 1, \ldots, n$.*
(c') *If (A_j, B_j) is the canonical separation of $L(G)$ for N_j, then $(A_j, B_j) \in \mathcal{T}$ for $j = 1, \ldots, n$.*

Proof. In the proof, we show by induction that for each $i = 1, \ldots, t-2$, there exists an edge set Z_i of size $|Z_i| \leq i \cdot (t+t^2k)^t$ such that the vertex set of $G - Z_i$ has a partition into vertex sets $M_0^{(i)}, M_1^{(i)}, \ldots, M_{\ell_i}^{(i)}$ such that

(a) $M_0^{(i)}$ has at most $|Z_i|$ vertices with degree at least $t-1$ in $G - Z_i$.
(b) $|\delta_{G-Z_i}(M_j^{(i)})| \leq t-i-1$ holds for $j = 1, \ldots, \ell_i$.
(c) If (A_j, B_j) is the canonical separation of $L(G)$ for $M_j^{(i)}$, then $(A_j, B_j) \in \mathcal{T}$ for $j = 1, \ldots, \ell_i$.
(d) Each $M_j^{(i)}$ for $j = 1, \ldots, \ell_i$ has $|\delta_{G-Z_i}(M_j^{(i)})|$ edge-disjoint paths from a vertex in $M_j^{(i)}$ to the edges $\delta_{G-Z_i}(M_j^{(i)})$ in $G - Z_i$.

If the statement is true, we have Claim 4.3 when $i = t-2$.

If $i = 1$, the statements hold by Claim 4.2. Suppose that the above statements hold when the index i is at most $t-3$. Consider $G_i = G - Z_i$. Then $L(G_i)$ has a clique minor $K^{(i)}$, included in $K - Z_i$, of order at least $d(k,t) - |Z_i| \geq 3/2kt$, which is attached to $\mathcal{T} - Z_i$. We may suppose that $M_1^{(i)}, \ldots, M_{\ell_i'}^{(i)}$ ($\ell_i' \leq \ell_i$) have at least two vertices by relabeling, and each $M_j^{(i)}$ for $j = 1, \ldots, \ell_i'$ intersects with some K_t-immersion R_j in $G - Z_i$ all of whose branch vertices are contained in M_j, which follows from a similar argument before Claim 4.3. Let $\{X_j \mid j \in J_i\}$ be the family of all the $(t-i-1)$-stars in G_i each has a center belonging to some $M_j^{(i)}$ for $j = 1, \ldots, \ell_i'$. We apply Theorem 2.3 to the tangle $\mathcal{T} - Z_i$ and the sets $\{X_j \mid j \in J_i\}$ in $L(G_i)$. Let $J' \subseteq J_i$ be the subset satisfying 1–3, and let $X = \bigcup_{j \in J'} X_j$. We suppose that $X_1, \ldots, X_{|J'|}$ are in X.

First suppose that $|X| \geq 2tk$. Since X is free with respect to $\mathcal{T} - Z_i$, at least $2k$ of $M_j^{(i)}$'s contain the center of some X_j in X. This is because otherwise the canonical

separation (A, B) in $L(G_i)$ for the union of $M_j^{(i)}$'s having a center in X has size at most $2k(t-i-1) < 2kt$ by (b), while $(A, B) \in \mathcal{T} - Z_i$, which contradicts that X is free with respect to $\mathcal{T} - Z_i$. For simplicity, we may suppose by relabeling that each of $M_j^{(i)}$ for $j = 1, \dots, 2k$ has the center of X_j in X. Then Theorem 4.1 applied to the clique minor $K^{(i)}$ and the set $\bigcup_{j=1}^{2k} X_j$ of terminals implies that there exist pairwise vertex-disjoint paths $P_1, P_2, \dots, P_m$, where $m = k(t-i-1)$, in $L(G)$ such that they have $(t-i-1)$ vertex-disjoint paths between X_j and X_{k+j} for $j = 1, \dots, k$. Then the paths between X_j and X_{k+j} yield $(t-i-1)$ edge-disjoint paths from the center of X_{k+j} to $\delta_{G-Z_i}(M_j^{(i)})$ in G_i. These paths, together with $R_j \cap G[M_j^{(i)}]$, form a K_t-immersion. Since they are edge-disjoint, G_i admits k edge-disjoint K_t-immersions.

Thus we may assume that $|X| < 2tk$. By Theorem 2.3, there exists a set $Z' \subseteq E(G_i)$ with $|Z'| \leq (t-i+2tk)^{t-i}$ satisfying 4 in Theorem 2.3. That is, each X_j is not free with respect to $\mathcal{T} - Z_i - Z'$ in $G_i - Z'$ if $X_j \cap Z' = \emptyset$. Define $Z_{i+1} = Z_i \cup Z'$. The size is $\leq (i+1) \cdot (t + t^2k)^t$. Then, similarly to the proof of Claim 4.2, there exist disjoint vertex sets $M_j^{(i+1)}$ for $j = 1, \dots, \ell_{i+1}$ such that (b) and (d) hold for Z_{i+1}. Let $M_0^{(i+1)} = V(G) \setminus \bigcup_{j=1}^{\ell_{i+1}} M_j^{(i+1)}$. Since a vertex with degree at least $t-1$ in $\bigcup_{j=1}^{\ell_i} M_j^{(i)}$ is a center of X_j for some $j \in J_i$, at most $|Z'|$ vertices of them may be in $M_0^{(i+1)}$. Hence the total number of vertices with degree at least $t-1$ of $M_0^{(i+1)}$ in $G - Z_{i+1}$ is at most $|Z_i| + |Z'| \leq |Z_{i+1}|$. Thus (a) follows. Furthermore, $K - Z_{i+1}$ has a clique minor of order at least $d(k,t) - |Z_{i+1}|$. Since the size of the edge cut $\delta_G(M_j^{(i+1)})$ is at most $(i+1)\cdot(t+t^2k)^t + t - i - 2 < d(k,t)$, the canonical separation (A_j, B_j) of $L(G)$ for $M_j^{(i+1)}$ satisfies that $(A_j, B_j) \in \mathcal{T}$ for $j = 1, \dots, \ell_{i+1}$, and hence (c) holds. Thus we obtain the claim. □

Contract each N_j for $j = 1, \dots, n$ to one vertex. The resulting graph consisting of the contracted vertices and N_0 is denoted by N. The graph N has at most $|D|$ vertices with degree at least $t-1$.

The following lemma shows that the size of a hitting edge set is bounded by the number of vertices with degree at least $t-1$.

Lemma 4.4. *Let G be a graph, and let z be the number of vertices with degree at least $t-1$. If G has no k edge-disjoint K_t-immersions, then there exists a hitting edge set of size at most $(t-1)^2k(z-1)$.*

Proof. Let $\alpha(z)$ be the minimum size of a hitting edge set. We will show $\alpha(z) \leq (t-1)^2k(z-1)$ by induction on z. If $z < t$, then G has no K_t-immersion, and thus $\alpha(z) = 0$.

Suppose that $z \geq t$. Let $v_1, \dots, v_t$ be t vertices with degree at least $t-1$. Consider adding an auxiliary vertex w to the graph, adding $(t-1)k$ parallel edges between w and each of $v_2, \dots, v_t$. First suppose that there exist $(t-1)^2k$ edge-disjoint paths between v_1 and w. It is not difficult to see that the union of the paths yields k edge-disjoint K_t-immersions. Indeed, by the construction, each of $v_2, \dots, v_t$ has exactly $(t-1)k$ edge-disjoint paths to v_1 in the original graph G. Using $(t-1)$ edge-disjoint paths among

them between v_1 and v_j for all j, we obtain a K_t-immersion, as each v_j has $(t-1)$ edge-disjoint paths to the others. Thus G contains k edge-disjoint K_t-immersions. Otherwise, by Menger's theorem, there exists an edge subset R of size less than $(t-1)^2k$ such that deleting R separates w and v_1. By the construction, at least one of $v_2, \dots, v_t$ is separated from v_1 in $G - R$.

Let z' be the number of vertices with degree at least $t-1$ in the component containing v_1 in $G - R$. Since $1 \le z' \le z - 1$, we apply the induction to the component and the complement. Then we have

$$\begin{aligned}\alpha(z) &\le \alpha(z') + \alpha(z - z') + (t-1)^2k \\ &\le (t-1)^2k(z'-1) + (t-1)^2k(z - z' - 1) + (t-1)^2k \le (t-1)^2k(z-1),\end{aligned}$$

which proves the lemma. □

We are now ready to finish the proof of Lemma 3.1. If G has no k edge-disjoint K_t-immersions, then neither does N. Therefore, N has a hitting edge set F_N of size at most $(t-1)^2k(|D|-1)$ by Lemma 4.4. Since only $B - V(A)$ contains the line graph of some K_t-immersion for each separation $(A, B) \in \mathcal{T}$ in $L(G)$, each N_j contains no K_t-immersions for $j = 1, \dots, n$ by (c') of Claim 4.3. Since $|\delta_{G-D}(N_j)| \le 1$, the set F_N together with D is a hitting edge set for G. Since $|D| \le (t-2)(t+t^2k)^t \le t(2t^2k)^t$, the size of a minimum hitting edge set F is at most

$$|F| \le (t-1)^2k(|D|-1) + |D| \le 2t^3k(2t^2k)^t,$$

which proves Lemma 3.1. □

5. Graphs with small tree-width

In this section, we discuss the case when the tree-width of a graph G is at most w, where w is a fixed positive integer.

Theorem 5.1. *For any positive integers k, t, w, there exists an integer $f(k, t, w)$ satisfying the following. Let G be a graph such that $\mathrm{tw}(G) \le w$. If G does not have k edge-disjoint K_t-immersions, then there exists a hitting edge set F whose size is at most $f(k, t, w)$.*

We prove Theorem 5.1 by induction on k. Assuming the induction hypothesis, we have the following lemma.

Lemma 5.2. *Assume that k is a positive integer such that $f(k-1, t, w)$ exists, where f comes from Theorem 5.1. Let p be an integer. Let $G = (V, E)$ be a graph such that the tree-width is at most w and it has no k edge-disjoint K_t-immersions. Suppose that there exists an edge subset F of size at most p such that $G - F$ has two components X and Y*

both of which contain a K_t-immersion. Then the size of a minimum hitting edge set is at most $2f(k-1,t,w)+p$.

Proof. It is straightforward to see that both the subgraphs X and Y satisfy the induction hypothesis (i.e., the assumption of the tree-width in Lemma 5.2). Since both X and Y have less than $k-1$ edge-disjoint K_t-immersions, the induction hypothesis implies that there exist edge subsets F_1 and F_2 with $|F_i| \leq f(k-1,t,w)(i=1,2)$ such that $X-F_1$ and $Y-F_2$ have no K_t-immersions. Since every K_t-immersion that is not a K_t-immersion of X or Y meets F, the set $F_1 \cup F_2 \cup F$ is a hitting edge set. Hence the size is at most $2f(k-1,t,w)+p$. $\square$

Proof of Theorem 5.1. Define $h = h^*(d(k,t), 2(w+1))$ and $p(k,t) = 20^{2^{h^5}}$, where h^* is the function in Proposition 2.2 and $d(k,t)$ is defined as in Lemma 3.1.

We suppose that k is a positive integer such that $f(k-1,t,w)$ exists, as the case when $k=1$ is trivial, i.e., $f(1,t,w)=0$. Also, we may assume that the size of a minimum hitting edge set is greater than $3p(k,t)$ and $2f(k-1,t,w)+p(k,t)$.

By Lemma 5.2, for any edge set F of size at most $p(k,t)$, $G-F$ contains at most one component that contains a K_t-immersion. Since F is not a hitting edge set, $G-F$ contains exactly one such component. This allows us to define a tangle $\mathcal{T}$ of large order in the line graph $L(G)$.

Let (A,B) be a separation of order less than $p(k,t)$ in $L(G)$. Then the vertex set $V(A) \cap V(B)$ of $L(G)$ corresponds to an edge subset F of G whose deletion separates the subgraphs induced by $V(A-B)$ and by $V(B-A)$, respectively (Note that one may be empty). By Lemma 5.2, exactly one of them contains a K_t-immersion. We define $\mathcal{T}$ to be all the separations (A,B) of order less than $p(k,t)$ in $L(G)$ such that only $B-V(A)$ contains the line graph of some K_t-immersion in G.

We claim that $\mathcal{T}$ forms a tangle of order $p(k,t)$. Let F^* be a minimum hitting edge set. Then, for any separation $(A,B) \in \mathcal{T}$ in $L(G)$, it holds that A contains at most $p(k,t)$ edges of F^*, because otherwise $(F^* \setminus V(A)) \cup V(A \cap B)$ is a smaller hitting edge set. Therefore, for $(A_1,B_1),(A_2,B_2),(A_3,B_3) \in \mathcal{T}$, $A_1 \cup A_2 \cup A_3$ does not contain all the edges in F^* because $|F^*| > 3p(k,t)$, and hence (ii) in the definition of a tangle holds. Since (iii) in the definition also holds, $\mathcal{T}$ is a tangle of order $p(k,t)$.

Since $p(k,t) \geq 20^{2^{h^5}}$, it follows from Proposition 2.1 that $L(G)$ has a wall of height h, which is attached to $\mathcal{T}$. By Proposition 2.2, $L(G)$ has a clique minor K of order $d(k,t)$ which is attached to $\mathcal{T}$, or a vertex subset X of size at most $\binom{d(k,t)}{2}$ such that $L(G)-X$ has a flat wall W of height $2(w+1)$. If the second case holds, then the flat wall W in $L(G)$ corresponds to a wall of height at least $h/2 = w+1$ in G. Indeed, since W is flat, a horizontal path of W induces a path of length at least $(w+1)$ without short-cut edges in G. This gives a path of length at least $(w+1)$ in G. Hence we can obtain $w+1$ pairwise vertex-disjoint paths in G each of which comes from the $(2i+1)$th horizontal path in $L(G)$ for $i=0,1,\ldots,w$. Moreover, the paths corresponding to the $(2j+1)$th vertical paths for $j=0,1,\ldots,w$ give rise to $w+1$ pairwise vertex-disjoint paths in G. They yield

a wall of height at least $w+1$ in G, which contradicts the assumption that $\mathrm{tw}(G)$ is at most w. Thus $L(G)$ has a clique minor K of order $d(k,t)$ which is attached to $\mathcal{T}$.

Therefore, it follows from Lemma 3.1 that there exists a hitting edge set of size bounded by some constant $g(k,t)$. Thus Theorem 5.1 holds. □

6. Four-edge-connected graphs with large tree-width

6.1. Relaxing four-edge-connectivity

In this section, we prove Lemma 3.4, which is recaptured below.

Lemma 3.4. *For any positive integer d, define $\alpha = 2d^3+1$ and $\beta = 4d$. Suppose that a graph G has a flat wall W of height at least $\alpha(\beta+2)$, which has disjoint proper subwalls $W_1,\dots,W_\alpha$ of height 2 such that $\mathrm{comp}(W_i)$ contains two edge-disjoint paths connecting the diagonally opposite corners of W_i, and $d_W(W_i,W_j) \geq \beta$ for each distinct i,j.*

Then, $L(G)$ has a K_d-minor K such that there exist d edge-disjoint paths in G from the subgraphs corresponding to different clique nodes of K to different nails of W.

Proof of Lemma 3.4. In the wall W, let the (i,j)-brick denote the brick which is the jth brick in the ith level. Let $W_{(i,j)}$ be the proper subwall of height two which consists of the four bricks: (i,j), $(i,j+1)$, $(i+1,j)$, and $(i+1,j+1)$. We denote by $w_{(i,j)}, x_{(i,j)}, y_{(i,j)}, z_{(i,j)}$ the four corners of $W_{(i,j)}$ in the order shown in Fig. 3, where $w_{(i,j)}$ is the corner of the (i,j)-brick.

We first, for simplicity, suppose that $\mathrm{comp}(W_{(i,j)})$ contains two edge-disjoint paths connecting the diagonally opposite corners of $W_{(i,j)}$ for any $1 \leq i,j \leq 4d$. We denote by $R_{(i,j)}$ and $R'_{(i,j)}$ such two edge-disjoint paths in $\mathrm{comp}(W_{(i,j)})$ from $w_{(i,j)}$ to $y_{(i,j)}$ and from $x_{(i,j)}$ to $z_{(i,j)}$, respectively. Then we can construct a K_d-minor in $L(G)$ as follows (see Fig. 3). For $i=1,\dots,d$, take $R_{(4i-3,4\ell-3)}$'s for all $\ell=1,\dots,d$, and connect them with edges of $W_{(4i-3,4\ell-1)}$ for all $\ell=1,\dots,d$. The obtained path is denoted by P_i for $i=1,\dots,d$, which is included in the $(4i-3)$th and $(4i-2)$th levels. Similarly, for $j=1,\dots,d$, let Q_j be the path obtained by connecting $R'_{(4\ell-3,4j-3)}$'s with edges of $W_{(4\ell-1,4j-3)}$ for all $\ell=1,\dots,d$. Hence P_i and Q_j are mutually edge-disjoint. Also P_i and Q_i intersect only once in $\mathrm{comp}(W_{(4i-3,4i-3)})$ by the flatness of W. Then we can find a K_d-minor in $L(G)$ whose clique nodes are corresponding to $E(P_i \cup Q_i)$ for $i=1,\dots,d$. We use this technique for the general case.

We consider the unique planar embedding of the wall W. Let v be a point on the outer face in the plane. We may suppose that $d_W(v,W_\alpha) \leq d_W(v,W_i)$ for every integer $i = 1,\dots,\alpha$. Since $\beta \leq d_W(W_i,W_\alpha) \leq d_W(v,W_i) + d_W(v,W_\alpha)$, we have $\beta/2 \leq d_W(v,W_i)$. Thus there are $\alpha-1 = 2d^3$ walls $W_1,\dots,W_{\alpha-1}$ whose distance from the outer face is at least $\beta/2$.

We consider the following two cases separately. We define a *stripe* as the union of consecutive $d+1$ levels of W.

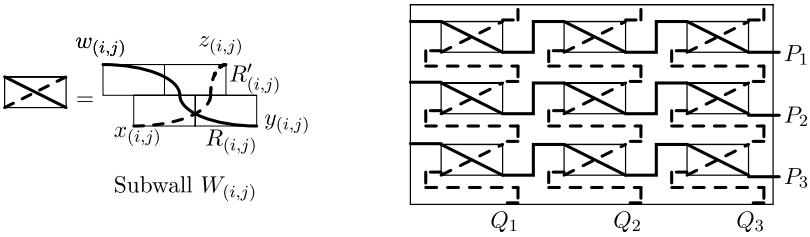

Fig. 3. The right figure shows how to construct a K_d-minor in a simple case, where a rectangle with crossing lines is a wall of height two as depicted in the left figure.

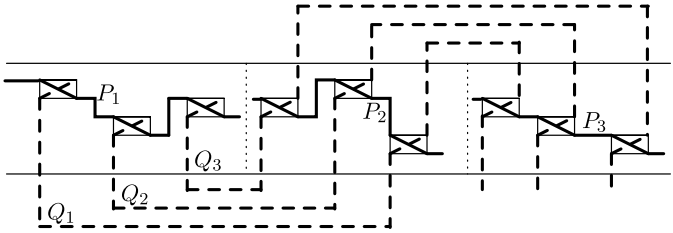

Fig. 4. Construction of a K_d-minor in Case 1.

Case 1. When there exists a stripe that contains d^2 walls in $\{W_1, \dots, W_{\alpha-1}\}$.

In this case, we assume that $W_1 = W_{(i_1,j_1)}, W_2 = W_{(i_2,j_2)}, \dots, W_{d^2} = W_{(i_{d^2},j_{d^2})}$ are in the stripe, and $j_1 < j_2 < \cdots < j_{d^2}$. For convenience, we denote $u_\ell = u_{(i_\ell,j_\ell)}$ for $u \in \{w, x, y, z\}$ and $\ell = 1, \dots, d^2$. Let R_ℓ and R'_ℓ be two edge-disjoint paths in $\mathrm{comp}(W_\ell)$ from w_ℓ to y_ℓ and from x_ℓ to z_ℓ, respectively.

We first take the first d walls $W_1, W_2, \dots, W_d$. By connecting y_ℓ and $w_{\ell+1}$ for $\ell = 1, \dots, d-1$ by edges of W, together with R_ℓ's, we obtain a path P_1. See Fig. 4. Similarly, taking the next d walls $W_{d+1}, W_{d+2}, \dots, W_{2d}$, we obtain a path P_2 using $R_{d+\ell}$'s ($\ell = 1, \dots, d$). By repeating this procedure, we obtain d disjoint paths P_p ($p = 1, \dots, d$) in the stripe.

Let $q = 1, \dots, d$. For each $\ell = 1, \dots, d$, define $q_\ell = q$ if ℓ is odd and $q_\ell = d - q + 1$ if ℓ is even. Let Q_q be a path consisting of $R'_{d\ell+q_\ell}$'s and paths between $R'_{d\ell+q_\ell}$'s for all $\ell = 0, \dots, d-1$. Since $d_W(W_i, W_j) \geq \beta \geq d+1$ and $d_W(v, W_j) \geq \beta/2 \geq d+1$, we can take Q_q's so that they are mutually edge-disjoint, and each Q_q intersects each of P_p only once. Then we can find a K_d-minor in $L(G)$ whose clique nodes are corresponding to $E(P_p \cup Q_p)$ for $p = 1, \dots, d$.

Case 2. When every stripe contains at most $d^2 - 1$ walls in $\{W_1, \dots, W_{\alpha-1}\}$.

Suppose that $\mathcal{W} := \{W_1 = W_{(i_1,j_1)}, W_2 = W_{(i_2,j_2)}, \dots, W_{\alpha-1} = W_{(i_{\alpha-1},j_{\alpha-1})}\}$ satisfies $i_1 \leq i_2 \leq \cdots \leq i_{\alpha-1}$. For convenience, we denote $u_\ell = u_{(i_\ell,j_\ell)}$ for $u \in \{w, x, y, z\}$ and $\ell = 1, \dots, \alpha-1$. Let R_ℓ and R'_ℓ be two edge-disjoint paths in $\mathrm{comp}(W_\ell)$ from w_ℓ to y_ℓ and from x_ℓ to z_ℓ, respectively.

We first take $W_1, \dots, W_d$. Let $\gamma = i_d$, which is the maximum of i_t's for $u = 1, \dots, t$. We rename $W_1, \dots, W_d$ so that $j_1 \leq j_2 \leq \cdots \leq j_d$ and $i_\ell < i_{\ell+1}$ if $j_\ell = j_{\ell+1}$. We connect y_ℓ of W_ℓ and $w_{\ell+1}$ of $W_{\ell+1}$ for $\ell = 1, \dots, d-1$ with edges of W, and connect them with

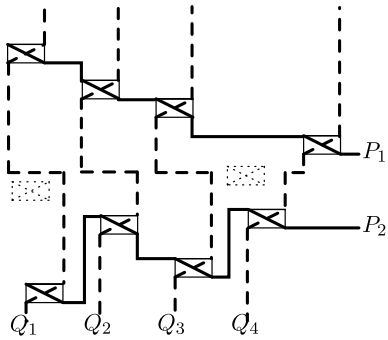

Fig. 5. Construction of a K_d-minor in Case 2. Removed subwalls are depicted as dotted rectangles.

R_ℓ's. The resulting path is denoted by P_1. See Fig. 5. Then remove all walls W_r in $\mathcal{W}$ such that $i_r < \gamma + d + 1$. Note that, by the assumption of Case 2, at most $d + d^2 - 1$ walls are removed in this procedure. Let r' be the largest index of the subwall removed. Again, take the next d subwalls $W_{r'+1}, W_{r'+2}, \ldots, W_{r'+d}$ in $\mathcal{W}$, and obtain a path P_2 going through $W_{r'+1}, W_{r'+2}, \ldots, W_{r'+d}$ using $R_{r'+\ell}$'s. Then remove all walls W_r in $\mathcal{W}$ such that $i_r < i_{r'+d} + d + 1$. By repeating this procedure, we have d disjoint paths, $P_1, P_2, \ldots, P_d$, since $\alpha - 1 \geq d(d + d^2)$.

By the construction, the distance between P_p and $P_{p'}$ is at least $d+1$ for any $p \neq p'$. For each $q = 1, \ldots, d$, define Q_q to be a path going through x_{pd+q} and z_{pd+q} using ${R'}_{pd+q}$ for all $p = 0, \ldots, d-1$. We can take Q_q's so that the family of Q_q's is mutually edge-disjoint and each Q_q intersects each of P_p only once. Therefore, we can find a K_d-minor in $L(G)$ whose clique nodes are corresponding to $E(P_p \cup Q_p)$ for $p = 1, \ldots, d$.

In either case, it follows that there exists a subwall of height at least d that has d edge-disjoint paths to $P_p \cup Q_p$'s. Thus the statement holds. □

6.2. Erdős–Pósa property for $\mathcal{G}_{k,t,w}$

In this section, we give a proof of Theorem 3.5 by induction on k. The key idea of the proof is the following.

Lemma 6.1. *Assume that k is a positive integer such that $f'(k-1,t,w)$ exists for an integer t and w satisfying (1), where f' comes from Theorem 3.5. If a graph G in $\mathcal{G}_{k,t,w}$ has no k edge-disjoint K_t-immersions, then G has a hitting edge set of size at most $2f'(k-1,t,w) + d(k,t)$, or there is no vertex partition $\{X, Y\}$ in G such that*

1. *there are at most $d(k,t)$ edges between X and Y, and*
2. *both $G[X]$ and $G[Y]$ contain a K_t-immersion.*

Proof. Suppose such a partition $\{X, Y\}$ exists. Let F be the set of edges between X and Y. In this case, both $G[X]$ and $G[Y]$ have less than $k-1$ edge-disjoint K_t-immersions. We first claim the following.

Claim 6.2. *It holds that* $G[X] \in \mathcal{G}_{k-1,t,w}$.

Proof. We may assume that $G[X]$ has tree-width at least w. By Proposition 2.1, $G[X]$ contains a wall W of height h_0. By the assumption, W satisfies (I), (II), or (III) of the definition of $\mathcal{G}_{k,t,w}$ in G. We claim that W satisfies (I), (II), or (III) for $\mathcal{G}_{k-1,t,w}$ in $G[X]$.

Suppose (I) for G happens. Then since $f_1(k,t) \geq d(k,t)$, the vertex v is contained in $G[X]$. Since $f_1(k,t) - d(k,t) \geq f_1(k-1,t)$, the vertex v still has $f_1(k-1,t)$ edge-disjoint paths in $G[X]$ to different nails of W. Similarly, suppose (II) for G holds. Then the $K_{f_1(k,t)}$-minor leads to a clique minor of order $f_1(k-1,t)$ in $G[X]$, and it has $f_1(k-1,t)$ edge-disjoint paths in $G[X]$ to different nails of W. Finally, suppose (III) happens. Let W' be a subwall of W and $W_1, \ldots, W_{f_3(k,t)}$ be the subwalls of W' satisfying (III) for G. We claim that W' satisfies the condition (III) for $G[X]$. Indeed, since $W_1, \ldots, W_{f_3(k,t)}$ are flat and dividing, at least $f_3(k,t) - d(k,t) \geq f_3(k-1,t)$ of them satisfy that the compass of each wall contains two edge-disjoint paths connecting diagonally opposite corners in $G[X]$. The distance of such two walls in $G[X]$ is at least $f_2(k,t) - d(k,t) \geq f_2(k-1,t)$. Thus the claim holds. □

By the induction hypothesis, $G[X]$ has an edge set F_X of size at most $f'(k-1,t,w)$ such that $G[X] - F_X$ has no K_t-immersions. Similarly, $G[Y]$ is in $\mathcal{G}_{k-1,t,w}$, and it has a hitting edge set F_Y of size at most $f'(k-1,t,w)$. Then $F_X \cup F_Y \cup F$ is a hitting edge set in G, whose size is at most $2f'(k-1,t,w) + d(k,t)$. This completes the proof of Lemma 6.1. □

Theorem 3.5. *Let k, t be positive integers, and w be an integer satisfying (1). Then there exists an integer $f'(k,t,w)$ such that, for any graph G in $\mathcal{G}_{k,t,w}$, either there are k edge-disjoint K_t-immersions, or there exists a hitting edge set of size at most $f'(k,t,w)$.*

Proof. We prove the statement by induction on k. The result trivially holds for the case $k = 1$, as $f'(1,t,w) = 0$.

Let k be a positive integer at least two, and G be a graph in $\mathcal{G}_{k,t,w}$. Suppose that G has no k edge-disjoint K_t-immersions. We may also assume that the size of a minimum hitting edge set F satisfies

$$|F| > \max\{2f'(k-1,t,w) + d(k,t), 3d(k,t), f(k,t,w)\}, \tag{2}$$

where $d(k,t)$ is given in Lemma 3.1 and $f(k,t,w)$ comes from Theorem 5.1. By Theorem 5.1, the tree-width of G is at least w.

By Lemma 6.1, we may assume without loss of generality that, for any vertex partition $\{X, Y\}$ with at most $d(k,t)$ edges between X and Y, there is a K_t-immersion contained

in $G[Y]$, but no K_t-immersion contained in $G[X]$. Then we can define a tangle $\mathcal{T}$ of order $d(k,t)$ in the line graph of G; for a separation (A,B) of order less than $d(k,t)$ in $L(G)$, we define $(A,B) \in \mathcal{T}$ if $B - V(A)$ contains the line graph of some K_t-immersion in G and $A - V(B)$ has no line graph of a K_t-immersion. We can see that $\mathcal{T}$ forms a tangle of order $d(k,t)$ since $f'(k,t,w)$ is at least $3d(k,t)$ by (2) (similarly to the proof in Section 5).

Since G has tree-width at least w, G has a wall of height h_0. There are three cases we have to consider.

Case A. There exists a vertex v of degree at least $d(k,t)$ in G such that, for any separation $(A,B) \in \mathcal{T}$ of order less than $d(k,t)$ in $L(G)$, $B - V(A)$ contains an element of $\delta_G(v)$.

In this case, $L(G)$ has a clique minor of order $d(k,t)$, consisting of $\delta_G(v)$, that is attached to $\mathcal{T}$. Therefore, it follows from Lemma 3.1 that if G has no k edge-disjoint K_t-immersions then there exists a hitting edge set of size bounded by some constant $g(k,t)$.

Case B. There exists a wall W of height h_0 in G such that, for any separation $(A,B) \in \mathcal{T}$ in $L(G)$, $B - V(A)$ contains the line graph of some horizontal path of W.

Since $G \in \mathcal{G}_{k,t,w}$, the wall W satisfies one of the conditions (I), (II), or (III). It follows from Lemma 3.4 that, in either case, we obtain a clique minor K of order $f_1(k,t)$ in $L(G)$ satisfying that there exist $f_1(k,t)$ edge-disjoint paths in G from the subgraphs corresponding to different clique nodes of K to different nails of W. Hence, since $f_1(k,t) \geq d(k,t)$, K is attached to $\mathcal{T}$. Therefore, it follows from Lemma 3.1 that if G has no k edge-disjoint K_t-immersions then there exists a hitting edge set of size bounded by some constant $g(k,t)$.

Case C. Consider the remaining case. That is, the graph G satisfies the following two conditions:

- For any vertex v of degree at least $d(k,t)$ in G, there exists a separation $(A,B) \in \mathcal{T}$ of order $< d(k,t)$ in $L(G)$ such that $V(A)$ contains all elements of $\delta_G(v)$.
- For any wall W of height h_0 in G, there exists a separation $(A,B) \in \mathcal{T}$ in $L(G)$ such that $B - V(A)$ does not contain the line graph of some horizontal path of W.

Let W_1 be a wall of height h_0 in G. Then, by the assumption, there exists a separation $(A,B) \in \mathcal{T}$ in $L(G)$ such that $B - V(A)$ does not contain the line graph of some horizontal path of W_1. Since $h_0 > d(k,t)$, there exists the line graph of some horizontal path disjoint from $V(A) \cap V(B)$, which implies that $A - V(B)$ contains the line graph of some horizontal path. This means that there is a vertex partition $\{X,Y\}$ in G with at most $d(k,t)-1$ edges between X and Y such that $G[X]$ contains a horizontal path of W_1 and $G[Y]$ contains a K_t-immersion. We take such $\{X,Y\}$ so that the edge cut size is minimum, and in addition X is minimal. We apply a similar procedure to a vertex v of degree at least $d(k,t)$. That is, there is a vertex partition $\{X',Y'\}$ in G with at

most $d(k,t)-1$ edges between X' and Y' such that $G[X']$ contains v and $G[Y']$ contains a K_t-immersion. We take such $\{X', Y'\}$ so that the edge cut size is minimum, and in addition X' is minimal.

We do the above procedures for all such walls and vertices. Let $\{X_1, Y_1\}, \dots, \{X_\ell, Y_\ell\}$ be the obtained partitions. We denote by (A_i, B_i) the canonical separation in $L(G)$ for X_i. Then (A_i, B_i) is in $\mathcal{T}$. The following claim guarantees that the collection of $X_1, \dots, X_\ell$ forms a laminar family.

Claim 6.3. *The collection of $X_1, \dots, X_\ell$ forms a laminar family.*

Proof. Assume to the contrary that there exist two sets X_i, X_j such that $X_i \cap X_j \neq \emptyset$, $X_i \setminus X_j \neq \emptyset$, and $X_j \setminus X_i \neq \emptyset$. For simplicity, we denote $\delta = \delta_G$. It follows that $|\delta(X_i)| + |\delta(X_j)| \geq |\delta(X_i \cap X_j)| + |\delta(X_i \cup X_j)|$ by the submodularity of edge cuts, and $|\delta(X_i)| + |\delta(X_j)| \geq |\delta(X_i \setminus X_j)| + |\delta(X_j \setminus X_i)|$ by the posi-modularity. Note that, if X_i and X_j come from high-degree vertices, then we have a contradiction similarly to Claim 4.2.

First suppose that both X_i and X_j come from walls W_i and W_j of height h_0, respectively. We first claim that $|\delta(X_i \cap X_j)| < d(k,t)$. Indeed, suppose not. Since $|\delta(X_i)|, |\delta(X_j)| < d(k,t)$, we have $|\delta(X_i \cup X_j)| \leq |\delta(X_i)| + |\delta(X_j)| - d(k,t) < |\delta(X_i)|$. Since $h_0 > 2d(k,t)$, there is a horizontal path of W_i disjoint from $\delta(X_i) \cup \delta(X_j)$. This path is contained in $G[X_i \cup X_j]$, since all horizontal paths disjoint from $\delta(X_i)$ are in $G[X_i]$. Hence this contradicts that $|\delta(X_i)|$ is minimum, and thus $|\delta(X_i \cap X_j)| < d(k,t)$.

Suppose that $G[X_i \cap X_j]$ contains a horizontal path of W_i. Then, by the minimality of X_i, we have $|\delta(X_i)| < |\delta(X_i \cap X_j)|$. Hence the submodularity implies that $|\delta(X_i \cup X_j)| < |\delta(X_j)|$. Let (A, B) be the canonical separation for $X_i \cup X_j$. Then (A, B) is in $\mathcal{T}$ because of the definition (ii) of a tangle. Since $G[X_i \cup X_j]$ has a horizontal path of W_i, this contradicts that $|\delta(X_i)|$ is minimum. A similar argument holds when a horizontal path of W_j is contained in $G[X_i \cap X_j]$. Since $h_0 > 2d(k,t)$, there is a horizontal path of W_i (W_j, resp.) disjoint from $\delta(X_i) \cup \delta(X_j)$. This horizontal path of W_i (W_j, resp.) is contained in $G[X_i \setminus X_j]$ ($G[X_j \setminus X_i]$, resp.). Then, since $|\delta(X_i)| < |\delta(X_i \setminus X_j)|$ and $|\delta(X_j)| < |\delta(X_j \setminus X_i)|$ by the minimalities of U_w and $U_{w'}$, this is a contradiction to the posi-modularity. The same is true if X_j comes from a high-degree vertex. Thus the collection of $X_1, \dots, X_\ell$ forms a laminar family. □

By the construction of the collection and the definition of $\mathcal{T}$, $G[X_j]$ does not include a K_t-immersion in G. By reindexing, we may suppose that $X_1, \dots, X_{\ell'}$ are the maximal sets in the laminar family. Contract each X_j to one vertex for $j = 1, \dots, \ell'$. The resulting graph is denoted by G'. Then each vertex in G' has degree bounded by $d(k,t)$. Moreover, since G' has no wall of height h_0, the tree-width of G' is bounded by $w = 20^{2h_0^5}$ by Proposition 2.1. This implies that the tree-width of $L(G')$ is bounded by $(d(k,t))^2 w$.

Let $(T', \mathcal{V}')$ be a tree decomposition of $L(G')$ of width $(d(k,t))^2 w$. Since the vertices corresponding to each $\delta_G(X_j)$ form a clique in $L(G')$, the clique $\delta_G(X_j)$ is contained in one bag V_{r_j} of the tree decomposition for some $r_j \in V(T')$. Define the tree decomposition

$(T, \mathcal{V})$ of $L(G)$ to be one obtained from $(T', \mathcal{V}')$ as follows: The vertex set $V(T)$ is $V(T') \cup \{s_j \mid j = 1, \dots, \ell'\}$, and $E(T) = E(T') \cup \{s_j r_j \mid j = 1, \dots, \ell'\}$. For each $s \in V(T')$, define $V_s = V'_s$, and for each s_j, define $V_{s_j} = L[E(X_j) \cup \delta_G(X_j)]$. Thus each $L[E(X_j) \cup \delta_G(X_j)]$ becomes one bag attached to V_{r_j}, and it is a leaf of T. Note that each bag except for those from X_j's has size bounded by $(d(k,t))^2 w$. For each leaf $s \in V(T)$, we denote by $U_s = V_s \setminus V_{s'}$ with $ss' \in E(T)$. The subgraph U_s coming from X_j's does not include the line graph of a K_t-immersion in G.

It remains to show the following lemma, which follows by extending the proof in Thomassen [26].

Lemma 6.4. *Let t, k and β be positive integers. Then there exists a function $f''(k,t,\beta)$ satisfying the following. Let G be a graph, and $(T, \mathcal{V})$ be a tree decomposition of $L(G)$ satisfying that*

- *If the size of a bag is more than β, then the bag is a leaf of T.*
- *For each leaf $s \in T$ with $|V_s| > \beta$, U_s does not include the line graph of any K_t-immersion of G.*

Then, if G has no k edge-disjoint K_t-immersions, then there exists a hitting edge set F of size at most $f''(k,t,\beta)$.

Proof. We prove this by induction on k. For a K_t-immersion K in G, let $V_T(K)$ be the set of vertices u in T such that V_u intersects $L(K)$. We first observe the following.

Claim 6.5. *If there exist two K_t-immersions K, K' such that $V_T(K) \cap V_T(K') = \emptyset$, then there exists a hitting edge set F such that $|F| \le 2f''(k-1,t,\beta) + \beta$.*

Proof. By the assumption, there exists a separation (A, B) in $L(G)$ with $V_T(K) \subseteq V(A)$, $V_T(K') \subseteq V(B)$ such that $V(A) \cap V(B) = V_u \cap V_{u'}$ for some edge $uu' \in E(T)$. Both the subgraphs A and B have at most $k-1$ disjoint line graphs of K_t-immersions, and moreover, it is straightforward to see that both the subgraphs A and B satisfy the induction hypothesis (i.e., the assumption of the tree decomposition in the lemma). Hence there exist edge subsets F_i for $i = 1, 2$ such that neither $A - F_1$ nor $B - F_2$ has no line graph of K_t-immersion and $|F_i| \le f''(k-1,t,\beta)$. Since the line graph of a K_t-immersion that intersects both A and B has a vertex in $V_u \cap V_{u'}$, the size of a minimum hitting edge set is at most $2f''(k-1,t,\beta) + \beta$. Thus the statement holds. □

Thus we may assume that there exist no such pair of K_t-immersions. This implies that there exists a vertex u in T such that $u \in V_T(K)$ for any K_t-immersion K. Therefore, if we remove all the vertices in V_u, then the resulting graph has no line graph of a K_t-immersion. Note that we can take such u so that it is not a leaf by the assumption. Thus the size of a hitting edge set is bounded by β. □

The tree decomposition $(T, \mathcal{V})$ of $L(G)$ defined above satisfies the condition of Lemma 6.4 with $\beta = (d(k,t))^2 w$. Hence the minimum size of a hitting edge set is bounded by $f''(k, t, (d(k,t))^2 w)$.

Therefore, for all the three cases, the size of a minimum hitting set is bounded by the maximum of $g(k,t)$ and $f''(k, t, (d(k,t))^2 w)$, and thus Theorem 3.5 holds. □

7. K_5-immersions for a large tree-width graph

In this section, we discuss finding edge-disjoint K_5-immersions in a graph having large tree-width. We here use an improved variant of Proposition 2.2 due to [14]. Suppose that a graph G has a wall of height at least $h' = 49152d^{24}(40d^2 + h)$, where $d > 700k^2$ and $h = 24k(16k+1)(y+1)$ satisfying $y = 12288d^{24}$. Then it follows that G has either

- a clique minor of order d, or
- a vertex subset $X \subseteq V(G)$ of order at most y and a wall of height h which is flat in $G - X$.

For both cases, we shall find k edge-disjoint K_5-immersions in Sections 7.2 and 7.1, respectively. It follows from [1] that, if G has tree-width at least some polynomial in h', G has a wall of height h'. Thus this completes the proof of Theorem 1.3.

For a vertex set B, an *ℓ-spider* from a vertex v to B consists of ℓ internally edge-disjoint paths $P_1, \ldots, P_\ell$ such that the endpoints of P_i are v and a vertex $u_i \in B$. The vertex v is called the *center* of an ℓ-spider.

7.1. Graphs with a large flat wall

Suppose that G has a vertex subset X with small size such that $G - X$ has a large flat wall. In this section, we show that we can explicitly construct k edge-disjoint K_5-immersions.

We first prove the following simple case.

Lemma 7.1. *Let $G = (V, E)$ be a 4-edge-connected graph (or a 3-edge-cut-free graph). If G has a flat wall W of height at least 14, then G has a K_5-immersion.*

Proof. We divide W into 7×7 proper flat subwalls of height two. Then each subwall of height two satisfies that its compass contains two edge-disjoint paths connecting the diagonally opposite corners, which follows from the 4-edge-connectivity (or 3-edge-cut-freeness) of G and the characterization of the feasibility of the two edge-disjoint paths problem in [25]. By using this structure, we can easily construct a K_5-immersion in W. See Fig. 6 for example. □

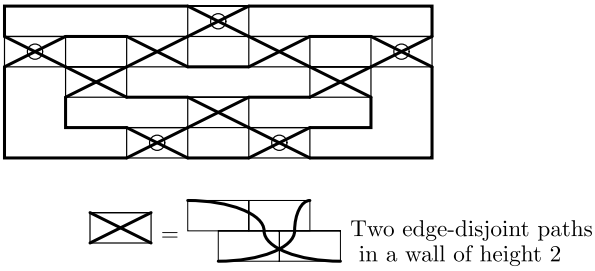

Fig. 6. The bold lines denote a K_5-immersion in a flat wall of height 14, where a rectangle with crossing bold lines is a wall of height two and the circles in it correspond to vertices in K_5.

Lemma 7.2. *Let k be a positive integer. Let $G = (V, E)$ be a 4-edge-connected graph (or a 3-edge-cut-free graph), and X be a set of vertices such that $G - X$ has a flat wall W of height at least $h \geq 24k(16k + 1)(|X| + 1)$. Then G has k edge-disjoint K_5-immersions.*

Proof. Let $p = 24k(|X| + 1)$. For $i = 1, \ldots, p$, define W_i to be a proper subwall of height $16k$ between the $(16k + 1)(i - 1)$th horizontal path to the $((16k + 1)i - 1)$th horizontal path, and between the $(16k + 1)(i - 1)$th vertical path to the $((16k + 1)i - 1)$th vertical path. Each W_i is flat in $G - X$. For convenience, $\mathrm{comp}(W_i)$ and $\mathrm{int}(W_i)$ denote the compass and the interior of W_i in $G - X$ in the proof, respectively. We say that a vertex x in X is *adjacent to* W_i if there is an edge between $\mathrm{comp}(W_i)$ and x.

Let $\mathcal{W} = \{W_1, \ldots, W_p\}$ and $X' = X$. We repeat the following while X' has a vertex x that is adjacent to at most $24k$ members of $\mathcal{W}$: delete x from X' and delete the adjacent subwalls from $\mathcal{W}$. In the end, we have a vertex subset X' of X and a family $\mathcal{W}$ of subwalls such that each vertex of X' is adjacent to more than $24k$ subwalls of $\mathcal{W}$, and each subwall in $\mathcal{W}$ is flat in $G - X'$. We denote by p' the number of subwalls in $\mathcal{W}$. Then $p' \geq p - 24k|X| \geq 24k$. If X' is empty, then we have a flat wall of height at least $16k$ in $\mathcal{W}$, which means that we have k disjoint flat walls of height 14, and thus G has k edge-disjoint K_5-immersions by Lemma 7.1. Thus we may suppose that X' has a vertex x.

We assume that x is adjacent to subwalls denoted by $W_1^*, \ldots, W_{16k}^*$ in $\mathcal{W}$. We divide $\mathcal{W} - \{W_1^*, \ldots, W_{16k}^*\}$ into two groups, $W_1, \ldots, W_{4k}$ and $\tilde{W}_1, \ldots, \tilde{W}_{p'-20k}$. By the construction, each vertex of $X' \setminus \{x\}$ is adjacent to at least $4k$ of $\tilde{W}_1, \ldots, \tilde{W}_{p'-20k}$.

For each $i \in \{1, 2, \ldots, 4k\}$, let us take a proper subwall W_i' of height two in the middle of W_i. Let v_i be the nail of W_i' not on the perimeter of W_i'. Let U be the set of four corners of W_i'. Then there exist three edge-disjoint paths from v_i to three distinct vertices of U in $\mathrm{comp}(W_i')$. Moreover, since G is 4-edge-connected (or 3-edge-cut-free), there exist four edge-disjoint paths P_j^i $(j = 1, 2, 3, 4)$ from v_i to $U \cup X'$ in $G[V(\mathrm{comp}(W_i')) \cup X']$, where $P_1^i, \ldots, P_3^i$ end in U. Indeed, if v_i does not have four edge-disjoint paths to U in $\mathrm{comp}(W_i')$, then there exists a vertex subset $N \subseteq V(\mathrm{comp}(W_i'))$ such that $v_i \in N$, $U \cap N = \emptyset$, and $|\delta_G(N)| = 3$. By taking N minimal, $G[N]$ does not contain an edge on the perimeter of W_i'. Since G is 4-edge-connected (or 3-edge-cut-free), some vertex of X' is adjacent to N. This implies that there exist four edge-disjoint paths from v_i

to $U \cup X'$ in $G[V(\mathrm{comp}(W'_i)) \cup X']$. Let $a^i_j \in U$ be the end vertex of P^i_j in U for each $j \in \{1,2,3\}$, and b^i be the end vertex of P^i_4 in $U \cup X'$. If $b^i \in U \cup \{x\}$, then define $a^i_4 = b^i$. If $b^i \in X' \setminus \{x\}$, since b^i is adjacent to at least $4k$ of $\tilde{W}_1, \dots, \tilde{W}_{p'-20k}$, we can choose one wall $\tilde{W}^i$ from $\tilde{W}_1, \dots, \tilde{W}_{p'-20k}$ that is disjoint from $\tilde{W}^1, \dots, \tilde{W}^{i-1}$, and extend P^i_4 to the one to $\tilde{W}^i$. Define a^i_4 to be the end vertex of the extended path in $\tilde{W}^i$. For simplicity, we may assume that $\tilde{W}^i$ is $\tilde{W}_i$ by reindexing $\tilde{W}_i$'s.

The compass of each W^*_ℓ has a path P_ℓ from x to the perimeter of W^*_ℓ for $\ell \in \{1, \dots, 4k\}$. Consider the graph H consisting of $W - \bigcup_{i=1}^{4k} \mathrm{int}(W'_i)$ and $\bigcup_{\ell=1}^{4k} P_\ell$, and define $S = \bigcup_{i=1}^{4k} \bigcup_{j=1}^{4} \{a^i_j\}$. We will see that there exist $16k$ edge-disjoint paths in H from each of S to $\{x\}$. Indeed, suppose not. Then there exists a vertex subset $M \subseteq V(H)$ such that $x \notin M$ and $|\delta_H(M)| < |M \cap S|$. We denote $F = \delta_H(M)$. Since $|F| \le 16k - 1$, there exists one wall W^*_ℓ such that the union of W^*_ℓ and P_ℓ has no edge of F. Moreover, there exists a horizontal path P of W intersecting W^*_ℓ that is disjoint from F, since the height of W^*_ℓ is $16k$. Also, for each W_i (and $\tilde{W}_i$, resp.) for $i \in \{1, \dots, 4k\}$, there exists a vertical path Q_i (and $\tilde{Q}_i$, resp.) of W intersecting W_i (and $\tilde{W}_i$, resp.) that is disjoint from F. Thus if there exists a path from a^i_j to Q_i (or $\tilde{Q}_i$) in $H - F$ for some $i \in \{1, \dots, 4k\}$ and $j \in \{1,2,3,4\}$, the vertex a^i_j is connected to x using Q_i (or $\tilde{Q}_i$) and P. It follows that there exist four edge-disjoint paths in $W_i \cup \tilde{W}_i$ from $\{a^i_1, \dots, a^i_4\}$ to Q_i or $\tilde{Q}_i$. This implies that, if ℓ vertices in $\{a^i_1, \dots, a^i_4\}$ are in M, F must contain at least ℓ edges in $W_i \cup \tilde{W}_i$. Therefore, we have to delete at least $|M \cap S|$ edges to separate $M \cap S$ in total, which is a contradiction. Thus there exist $16k$ edge-disjoint paths in H from each of S to $\{x\}$. Using the paths, we can obtain $4k$ edge-disjoint 4-spiders to $\{x\}$, and they yield k edge-disjoint K_5-immersions. □

7.2. Graphs with a large clique minor

In this section, we will show that if a graph G has a large clique minor, then there exist k edge-disjoint K_5-immersions.

Lemma 7.3. *Let G be a 4-edge-connected graph (or a 3-edge-cut-free graph). Suppose G has a K_p-minor K with $p = 700k^2$. Then G contains k edge-disjoint K_5-immersions.*

Proof. We need the following variant of Menger's Theorem.

Claim 7.4. *Let v be a vertex in a graph G, and let S be a vertex set of size at least k with $v_1, v_2, v_3 \in S$. Suppose that there exist k edge-disjoint paths from v to S, and in addition, there exist three edge-disjoint paths from v to v_1, v_2, v_3 that are internally disjoint from S. Then there exist k edge-disjoint paths from v to S such that three end vertices of them are v_1, v_2, v_3 and they are internally disjoint from S.*

We first observe that we can easily find three edge-disjoint paths in a clique node by applying the following claim where $H_0, \dots, H_3$ are clique nodes.

Claim 7.5. *For any four pairwise disjoint connected subgraphs H_0, H_1, H_2, H_3 of G, where $V(H_0)$ is adjacent to $V(H_j)$ in G for each $j \in \{1,2,3\}$, there exist vertices $v_j \in V(H_j)$ for each $j \in \{0,1,2,3\}$ such that there exist three edge-disjoint paths P_1, P_2, P_3 in $G[\bigcup_{i=0}^{3} V(H_i)]$, where P_j is from v_0 to v_j for $j \in \{1,2,3\}$.*

Proof. For each $j \in \{1,2,3\}$, let u_{0j}, u_{j0} be the end vertices of an edge connecting H_0 and H_j, where $u_{0j} \in V(H_0)$ and $u_{j0} \in V(H_j)$. If there is a vertex $v_0 \in V(H_0)$ that has neighbors in two (or three) of H_1, H_2, and H_3, then the claim easily follows. Furthermore, if there exists an index $\ell \in \{1,2,3\}$ such that $u_{0\ell}$ is on the path in H_0 between the other two vertices u_{0j} for $j \in \{1,2,3\} \setminus \{\ell\}$, then there exist three edge-disjoint paths in $G[V(H_0) \cup \{u_{10}, u_{20}, u_{30}\}]$ from $u_{0\ell}$ to u_{10}, u_{20}, and u_{30}, and hence the claim holds. Suppose that the above two conditions do not hold. Then there is a vertex $v_0 \in V(H_0)$ such that there are three components T_1, T_2, T_3 of $H_0 - v_0$ such that T_ℓ contains $u_{0\ell}$ for $\ell \in \{1,2,3\}$. In this case, we can find three edge-disjoint paths from v_0 to u_{10}, u_{20}, u_{30} in $G[V(H_0) \cup \{u_{10}, u_{20}, u_{30}\}]$. $\square$

We now label each clique node of K as $0, 1, \ldots, p-1$. Let σ be a mapping that represents the clique minor K.

Claim 7.6. *For any seven indices $i_0, i_1, i_2, \ldots, i_6$, there exist an index i_7, a vertex $v \in \bigcup_{j=0}^{3} V(\sigma(i_j))$, vertices $v_j \in V(\sigma(i_j))$ for each $j \in \{4,5,6,7\}$, and a 4-spider S from v to $\{v_4, v_5, v_6, v_7\}$ such that*

- *$V(S) \cap V(\sigma(i_j)) = \{v_j\}$ for each $j \in \{4,5,6,7\}$, and*
- *$E(S) \cap E(\sigma(\ell)) = \emptyset$ for each $\ell \in \{0,1,\ldots,p-1\} - \{i_0, i_1, i_2, \ldots, i_7\}$.*

Proof. We may simply assume that $i_j = j$ for all $j \in \{0,1,\ldots,6\}$. Let η be a function that maps elements of $\{0,1,\ldots,p-1\}$ to pairwise disjoint connected subgraphs of G such that

- $\bigcup_{j=0}^{3} V(\eta(j)) = \bigcup_{j=0}^{3} V(\sigma(j))$
- $V(\eta(j)) = V(\sigma(j))$ for every $j \in \{0,1,\ldots,p-1\} - \{0,1,2,3\}$
- for distinct indices j, j' of $\{0,1,\ldots,p-1\}$ with $\{j,j'\} \not\subseteq \{1,2,3\}$, there exists an edge $e_{jj'}$ with one end $u_{jj'}$ in $\eta(j)$ and the other end $u_{j'j}$ in $\eta(j')$.

Such a function η exists as we can choose η to be σ. We take η so that $|V(\eta(0))|$ is as large as possible. We may also assume that $\eta(j)$ is the subgraph induced by $V(\eta(j))$ for any $j \in \{0,1,\ldots,p-1\}$.

Let $K' = K - V(\eta(0))$. By Claim 7.5, there exists a vertex $v \in V(\eta(0))$ such that there are three edge-disjoint paths in $G[V(\eta(0)) \cup \{v_1, v_2, v_3\}]$ from v to v_1, v_2, v_3, where v_j is a vertex in $V(\eta(j))$ for $j \in \{1,2,3\}$. Since G is 4-edge-connected (or 3-edge-cut-free), v has four edge-disjoint paths to $V(K')$. Hence, by Claim 7.4, v has four edge-disjoint paths

to $V(K')$ that are internally disjoint from K' such that three of them end at v_1, v_2, v_3. Let v' be the other end vertex, and let i' be the index such that $v' \in V(\eta(i'))$. Let P_1, P_2, P_3 and P' denote the edge-disjoint paths from v to v_1, v_2, v_3, and v', respectively. If $i' \notin \{1, 2, 3\}$, then we can obtain a desired 4-spider from v. Indeed, first suppose that $i' \notin \{4, 5, 6\}$. Then, by giving the label 7 to i', there exist four edge-disjoint paths from v to v_1, v_2, v_3, v_7 satisfying that these paths intersect $\eta(j)$ with exactly one vertex v_j for $j \in \{1, 2, 3, 7\}$, and they are disjoint from $\eta(j)$ for $j \notin \{0, 1, 2, 3, 7\}$. Hence we can find a desired 4-spider by extending P_1, P_2, P_3 to $V(\eta(j))$ for $j \in \{4, 5, 6\}$. Next suppose that i' is one of 4, 5, and 6, say 4. Then, by extending P_1, P_2, P_3 to $V(\eta(5))$, $V(\eta(6))$, and $V(\eta(\ell))$ for some arbitrary index $\ell \notin \{0, 1, \dots, 6\}$, we obtain a desired 4-spider. Thus we may assume that i' is one of $1, 2, 3$, say $i' = 1$, by symmetry.

The subgraph $\eta(0)$ is connected to a clique node $\eta(i'')$ with $i'' \notin \{0, 1, \dots, 6\}$. There is a path P'' from v to $u_{i''0}$ in $G[V(\eta(0)) \cup \{u_{i''0}\}]$. If this path is edge-disjoint from P_2 and P_3, then there are four edge-disjoint paths from v to v_1, v_2, v_3 and $u_{i''0}$ by rerouting P_1 or P' to a path to $u_{i''0}$ if necessary, and hence we are done. Thus $E(P'') \cap (E(P_2) \cup E(P_3)) \neq \emptyset$, and we may assume by symmetry that, when we traverse P'' from $u_{i''0}$, it intersects a vertex of P_3 before that of P_2. Let Q be a path from $u_{i''0}$ to v using only P'' and P_3.

Suppose that $\eta(1)$ has two edge-disjoint paths Q_1, Q_2 from $\{v', v_1\}$ to $\{u_{14}, u_{15}\}$ with disjoint ends. Then extend Q_1, Q_2 to be paths from $\{v', v_1\}$ to $\{u_{41}, u_{51}\}$ by concatenating the edges e_{14} and e_{15}. They, together with the paths P', P_1, P_2 and Q by extending P_2 to u_{62}, provide a desired 4-spider from v to u_{41}, u_{51}, u_{62}, and $u_{i''0}$. So there exist no such two edge-disjoint paths in $\eta(1)$ from $\{v', v_1\}$. Hence there exists a vertex partition $\{X, Y\}$ of $\eta(1)$ with $v', v_1 \in X$ and $u_{14}, u_{15} \in Y$ such that the number of edges connecting X and Y is one in $\eta(1)$. We take such a partition so that X is minimal. We denote the cut edge by e_1.

We claim that, if X has an edge to $\eta(j)$ for some $j \in \{0, 1, \dots, p-1\} - \{0, 2\}$, then the desired 4-spider from v exists. Indeed, suppose that there is an edge e' from X to $\eta(j)$ for some $j \notin \{0, 2\}$. Then we can find two edge-disjoint paths in $G[X]$ from $\{v', v_1\}$ to the end vertices of e' and e_1 in X by the minimality of X. Hence, by setting $i_7 = j$ if $j \notin \{3, 4, 5, 6\}$ and $i_7 = i''$ otherwise, this yields a desired 4-spider.

Therefore, we may assume that $u_{1j} \notin X$ for any $j \in \{0, 1, \dots, p-1\} - \{0, 2\}$. We replace $\eta(0)$ with $G[V(\eta(0)) \cup X]$ and replace $\eta(1)$ with $G[V(\eta(1)) - X]$. This contradicts the maximality of $|V(\eta(0))|$ since u_{1j} remains in the new $\eta(1)$ for every $j \in \{0, 1, \dots, p-1\} - \{0, 2\}$. Thus the claim holds. □

Note that the 4-spider in Claim 7.6 may have vertices not in $V(K) = \bigcup_{j=0}^{p-1} V(\sigma(j))$. In such a case, by adding vertices in the 4-spider to one of $\sigma(i_0), \sigma(i_1), \dots, \sigma(i_6)$, we can modify σ so that the 4-spider is completely included in $G[\bigcup_{j=0}^{7} V(\sigma(i_j))]$.

Claim 7.7. *There are $5k$ edge-disjoint 4-spiders and a clique minor of order at least $20k$ such that each 4-spider is internally disjoint from the clique minor, all centers of the*

4-spiders are different, and each of the clique nodes contains one vertex of degree one in these spiders.

Proof. Let $q = 100k^2$. The order of the given clique minor is $7q$.

We first take $\sigma(0), \dots, \sigma(6)$. By Claim 7.6, there exists an index i' such that we have a 4-spider S_0 that is disjoint from the clique nodes in $\{7, 8, \dots, 7q-1\} - \{i'\}$. The 4-spider S_0 intersects $\sigma(i')$ with one vertex, denoted by a_0. Moreover, as mentioned just before Claim 7.7, modify $\sigma(0), \dots, \sigma(6)$ so that S_0 is included in $G[\bigcup_{\ell=0}^{6} V(\sigma(\ell)) \cup V(\sigma(i'))]$. We define $U_0 = \bigcup_{\ell=0}^{6} V(\sigma(\ell))$. We repeat this procedure q times with different clique nodes. More specifically, for $i = 0, \dots, q-1$, by applying Claim 7.6 with clique nodes $\sigma(7i), \dots, \sigma(7i+6)$, find an index i' such that we have a 4-spider S_i that is disjoint from the clique nodes in $\{0, 1, \dots, 7q-1\} - \{7i, 7i+1, \dots, 7i+6, i'\}$. The 4-spider intersects $\sigma(i')$ with one vertex, denoted by a_i. After modifying $\sigma(7i+\ell)$ $(\ell = 0, \dots, 6)$ so that S_i is included in $G[\bigcup_{\ell=0}^{6} V(\sigma(7i+\ell)) \cup V(\sigma(i'))]$, we define $U_i = \bigcup_{\ell=0}^{6} V(\sigma(7i+\ell))$. Thus each U_i, together with a clique node $\sigma(i')$, contains a 4-spider S_i such that all the vertices of S_i, except for one vertex a_i in $\sigma(i')$, are in U_i.

Let us contract each U_i into a single point. Then we obtain a clique K' consisting of the contracted vertices, whose order is q. Let us consider a directed graph $D = (V(K'), E_D)$, where an edge $xy \in E_D$ with $x, y \in V(K')$ exists if x corresponds to U_i and a_i is contained in the subgraph of K corresponding to y. Note that each vertex in D has exactly one outgoing edge.

If the number of vertices in D that have incoming edges is at least $10k$, then there are $5k$ vertex-disjoint edges (a matching of size $5k$), and hence there exist $5k$ edge-disjoint 4-spiders that satisfy the condition of the claim. So we may assume that this does not happen. Since the total number of edges in U is $q = 100k^2$, we see that D has a vertex whose indegree is at least $10k$. In other words, for some index j, there are $10k$ indices $i \neq j$ such that a_i is in U_j. By relabeling the indices, we may assume that $U_1, \dots, U_{10k}$ all have vertices $a_1, \dots, a_{10k}$ in U_j. Take a spanning tree T in U_j and fix a root r of T. Then there exist two vertices of $a_1, \dots, a_{10k}$ such that, if we delete the edges of the path P between the two vertices in T, all the remaining a_i's belong to the same component. This is because there exists a subtree containing exactly two vertices of $a_1, \dots, a_{10k}$, except for its root of the subtree. We do the same thing for $T' = T - E(P)$ and continue. At the end, by relabeling $a_1, \dots, a_{10k}$, there are $5k$ edge-disjoint paths $P_1, \dots, P_{5k}$ in T with the endpoints a_{2i-1}, a_{2i} of P_i for $i = 1, \dots, 5k$. Then each $S_{2i-1} \cup S_{2i} \cup P_i$ contains a 4-spider for $i = 1, \dots, 5k$, and these spiders are required ones. □

Suppose that we have $5k$ edge-disjoint 4-spiders and a clique minor of order $20k$ satisfying Claim 7.7. Then we can connect terminals of the $5k$ 4-spiders in an arbitrary way. Hence we can easily construct k edge-disjoint K_5-immersions. This completes the proof of Lemma 7.3. □

Acknowledgments

The authors thank the referees for useful comments and suggestions to improve the paper. The authors are also grateful to Yusuke Kobayashi for fruitful discussion on the problem.

References

[1] C. Chekuri, J. Chuzhoy, Polynomial bounds for the grid-minor theorem, in: Proceedings of the 46th ACM Symposium on Theory of Computing (STOC 2014), 2014, pp. 60–69.
[2] M. Chudnovsky, Z. Dvořák, T. Klimošová, P. Seymour, Immersion in four-edge-connected graphs, J. Combin. Theory Ser. B 116 (2016) 208–218.
[3] R. Diestel, K.Yu. Gorbunov, T.R. Jensen, C. Thomassen, Highly connected sets and the excluded grid theorem, J. Combin. Theory Ser. B 75 (1999) 61–73.
[4] R. Diestel, K. Kawarabayashi, P. Wollan, The Erdős–Pósa property for clique minors in highly connected graphs, J. Combin. Theory Ser. B 102 (2012) 454–469.
[5] P. Erdős, L. Pósa, On the maximal number of disjoint circuits of a graph, Publ. Math. Debrecen 9 (1962) 3–12.
[6] A.C. Giannopoulou, D.M. Thilikos, Optimizing the graph minors weak structure theorem, SIAM J. Discrete Math. 27 (2013) 1209–1227.
[7] N. Kakimura, K. Kawarabayashi, Packing cycles through prescribed vertices under modularity constraints, Adv. in Appl. Math. 49 (2012) 97–110.
[8] N. Kakimura, K. Kawarabayashi, Y. Kobayashi, Packing edge-disjoint odd Eulerian subgraphs through prescribed vertices in 4-edge-connected graphs, SIAM J. Discrete Math. 31 (2017) 766–782.
[9] N. Kakimura, K. Kawarabayashi, D. Marx, Packing cycles through prescribed vertices, J. Combin. Theory Ser. B 101 (2011) 378–381.
[10] K. Kawarabayashi, Y. Kobayashi, The edge disjoint paths problem in Eulerian graphs and 4-edge-connected graphs, Combinatorica 35 (2015) 477–495.
[11] K. Kawarabayashi, Y. Kobayashi, List-coloring graphs without subdivisions and without immersions, in: Proc. the 23rd Annual ACM-SIAM Symposium on Discrete Algorithms (SODA 2012), 2012, pp. 1425–1435.
[12] K. Kawarabayashi, Y. Kobayashi, Edge-disjoint odd cycles in 4-edge-connected graphs, J. Combin. Theory Ser. B 119 (2016) 12–27.
[13] K. Kawarabayashi, Y. Kobayashi, Linear min-max relation between the treewidth of H-minor-free graphs and its largest grid minor, in: Proc. the 29th Symposium on Theoretical Aspects of Computer Science (STACS 2012), 2012, pp. 278–289.
[14] K. Kawarabayashi, R. Thomas, P. Wollan, A new proof of the flat wall theorem, http://arxiv.org/abs/1207.6927, 2013.
[15] D. Marx, P. Wollan, Immersions in highly edge connected graphs, SIAM J. Discrete Math. 28 (2014) 503–520.
[16] M. Pontecorvi, P. Wollan, Disjoint cycles intersecting a set of vertices, J. Combin. Theory Ser. B 102 (2012) 1134–1141.
[17] B. Reed, Tree width and tangles: a new connectivity measure and some applications, in: Surveys in Combinatorics, in: London Math. Soc. Lecture Note Ser., vol. 241, Cambridge University Press, Cambridge, 1997, pp. 87–162.
[18] N. Robertson, P.D. Seymour, Graph minors. V. Excluding a planar graph, J. Combin. Theory Ser. B 41 (1986) 92–114.
[19] N. Robertson, P.D. Seymour, Graph minors. VII. Disjoint paths on a surface, J. Combin. Theory Ser. B 45 (1988) 212–254.
[20] N. Robertson, P.D. Seymour, Graph minors. X. Obstructions to tree-decomposition, J. Combin. Theory Ser. B 52 (1991) 153–190.
[21] N. Robertson, P.D. Seymour, Graph minors. XIII. The disjoint paths problem, J. Combin. Theory Ser. B 63 (1995) 65–110.
[22] N. Robertson, P.D. Seymour, Graph minors. XX. Wagner's conjecture, J. Combin. Theory Ser. B 92 (2004) 325–357.

[23] N. Robertson, P.D. Seymour, Graph minors. XXIII. Nash-Williams' immersion conjecture, J. Combin. Theory Ser. B 100 (2010) 181–205.
[24] N. Robertson, P.D. Seymour, R. Thomas, Quickly excluding a planar graph, J. Combin. Theory Ser. B 62 (1994) 323–348.
[25] P.D. Seymour, Disjoint paths in graphs, Discrete Math. 29 (1980) 293–309.
[26] C. Thomassen, On the presence of disjoint subgraphs of a specified type, J. Graph Theory 12 (1988) 101–111.
[27] P. Wollan, The structure of graphs not admitting a fixed immersion, J. Combin. Theory Ser. B 110 (2015) 47–66.