NAME _____ DATE _____

TITLE: BJT STRUCTURE, CHARACTERISTICS	REQUIREMENTS: Calculator
LESSON OBJECTIVES: At the end of the module, you should be able to: 1. Identify the schematic symbols for transistor. 2. Describe the basic structure and configurations of a transistor. 3. Differentiate the regions of operation of the transistor.	REFERENCE: Electronic Devices and Circuit Analysis by Boylestad and Nashelsky

INTRODUCTION

Bipolar junction transistors (BJT) or simply transistors are used when it is necessary to amplify voltage, current, and power. With a small signal applied to the transistor amplifier, the transistor and its associated circuitry can produce an amplified version of the input signal. The output signal can be hundreds or even thousands of times larger than the input signal. In computer circuits, the transistor can be used as an electronic switch.

MAIN LESSON

The transistor has three doped regions, as shown in Fig. 7–1. Figure 7–1a shows an npn transistor, and Fig. 7–1 b shows a pnp transistor. Notice that for both types, the base is a narrow region sandwiched between the larger collector and emitter regions. The emitter region of a transistor is heavily doped. Its job is to emit or inject current carriers into the base. The base region is very thin and lightly doped. Most of the current carriers injected into the base from the emitter do not flow out the base lead. Instead, most of the current carriers injected into the base collector region attracts the current carriers that are injected into the thin and lightly doped base region. Incidentally, the collector region is the largest of all three regions because it must dissipate more heat than the emitter or base regions.

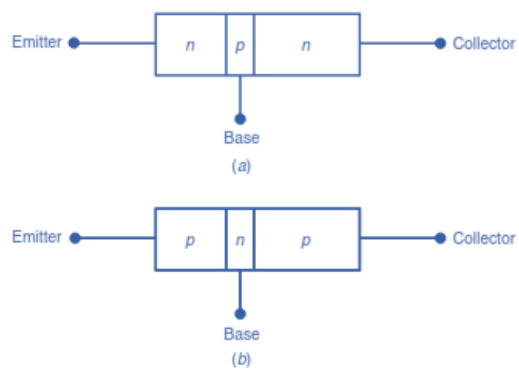

Figure 7–1

In npn transistors, the majority current carriers are free electrons in the emitter and collector, whereas the majority current carriers are holes in the base. The opposite is true in a pnp transistor where the majority current carriers are holes in the emitter and collector, and the majority current carriers are free electrons in the base. The term bipolar means that there are two carriers used in a transistor: the free holes and free electrons.

Figure 7–2 shows the depletion layers in an unbiased npn transistor. The diffusion of electrons from both n regions into the p-type base causes a barrier potential, VB, for both p-n junctions. The p-n junction at the left is the emitter-base junction; the p-n junction at the right is the collector-base junction. For silicon, the barrier potential for both the emitter-base (EB) and collector-base (CB) junction's equals approximately 0.7 V.

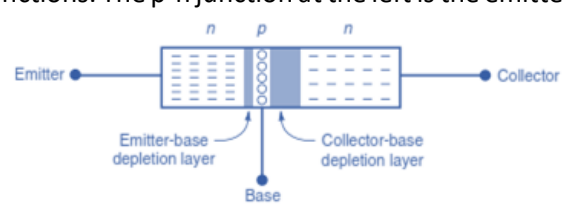

Figure 7–2

Figure 7-3 below shows the schematic symbols for both the npn and pnp transistors. Notice the arrow on the emitter lead for both types. For the npn transistor in the figure 7-3 a, the arrow on the emitter lead points outward, and in the pnp transistor of figure 7-3 b, the arrow on the emitter lead points inward.

The npn and pnp transistors are not different in terms of their ability to amplify voltage, current, or power. Each type, however, does require different polarities of operating voltages. For example, the collector-emitter voltage, V_{CE}, of an npn transistor must be positive, and the collector-emitter voltage, V_{CE}, must be negative for the pnp type.

Figure 7-3

TRANSISTOR BIASING

For a transistor to function properly as an amplifier, the emitter-base junction must be forward-biased, and the collector-base junction must be reverse-biased, as illustrated in figure 7–4. Notice the common connection for the voltage sources at the base lead of the transistor. The emitter-base supply voltage is designated V_{EE} and the collector-base supply voltage is designated V_{CC}.

Figure 7–4

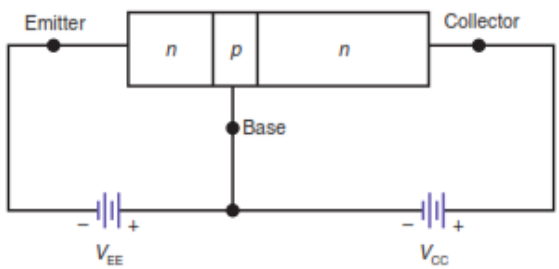

Figure 7–5 shows the emitter current, I_E, the base current, I_B, and the collector current, I_C. Electrons in the n -type emitter are repelled into the base by the negative terminal of the emitter supply voltage, V_{EE}. Since the base is very thin and lightly doped, only a few electrons combine with holes in the base. The small current flowing out of the base lead (which is the base current, I_B) is called recombination current because free electrons injected into the base must fall into a hole before they can flow out the base lead.

Notice in 7–5 that most of the emitter-injected electrons pass through the base region and into the collector region. The reason is twofold. First, only a few holes are available for recombination in the base. Second, the positive collector-base voltage attracts the free electrons in the p -type base over to the collector side before they can recombine with holes in the base. In most transistors, the collector current, I_C, is nearly identical to the emitter current, I_E. This is equivalent to saying that the recombination current, I_B, is very small compared to I_E and I_C.

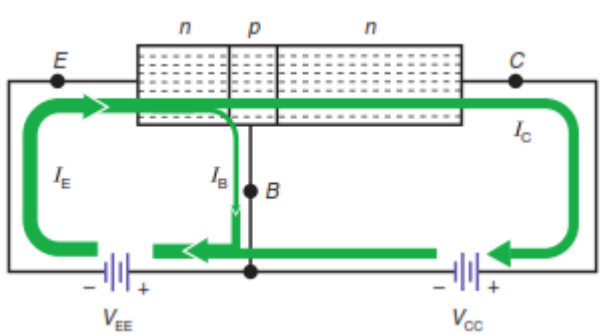

Figure 7–5

Only a small voltage is needed to create an electric field strong enough in the collector-base junction to collect almost all free electrons injected into the base. After the collector-base voltage reaches a certain level, increasing it further will have little or no effect on the number of free electrons entering the collector. As a matter of fact, after the collector-base voltage is slightly above zero, full current is obtained in the collector. If the voltage across the collector-base junction is too large, however, the breakdown voltage may be exceeded, which could damage the transistor.

Notice also the relative size of the current arrows shown in Fig. 7–5. The currents are illustrated in this manner to emphasize their relationship with each other. The currents in a transistor are related as shown in the formulas below:

$$I_E = I_B + I_C$$

$$I_E \cong I_C \; since \; I_E \gg I_B \; and \; I_C \gg I_B$$

EXAMPLE

A transistor has the following currents: I_E = 1.82 mA, I_B = 10 µA. Calculate the value of I_C.

$$I_C = I_E - I_B = 1.82\,mA - 10\,\mu A = 1.81\,mA$$

DC ALPHA

The circuit shown in figure 7–5 is called a common-base (CB) connection because the base lead is common to both the input and output sides of the circuit. A characteristic that describes how closely the emitter and collector currents are in a common base circuit is called the dc alpha, designated as α_{dc} or simply α.

$$\alpha = \frac{I_C}{I_E}$$

In most cases, the dc alpha is 0.99 or greater since $I_E \cong I_C$. The thinner and more lightly doped the base, the closer alpha is to one, or unity. In most discussions, the dc alpha is so close to one that we ignore the small difference that exists. close to one that we ignore the small difference that exists.

COMMON BASE CONFIGURATION

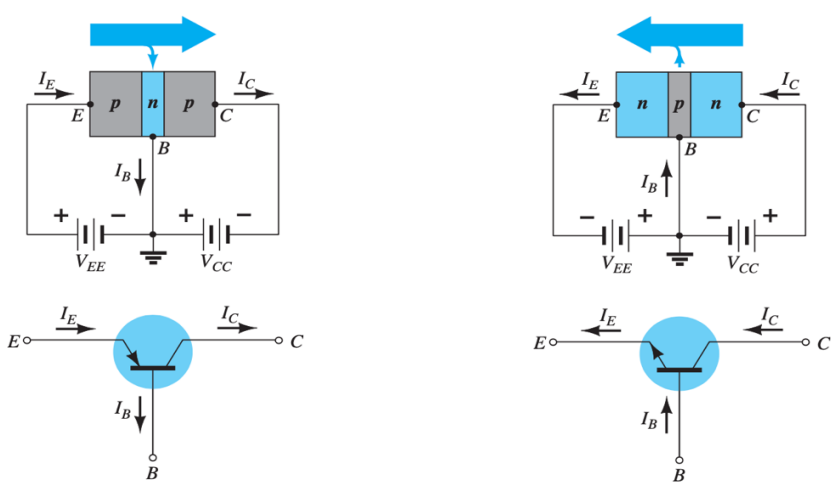

DC BETA

Figure 7–6 shows another way to connect external voltages to the npn transistor. VBB provides the forward bias for the base-emitter junction, and VCC provides the reverse bias for the collector-base junction. This connection is called the common emitter (CE) connection since the emitter lead is common to both the input and output sides of the circuit. Notice the arrows indicating the direction of the transistor currents IE, IC, and IB. The dc current gain of a transistor in the common-emitter connection is called the dc beta, usually designated β_{dc} or simply β.

$$\beta = \frac{I_C}{I_B}$$

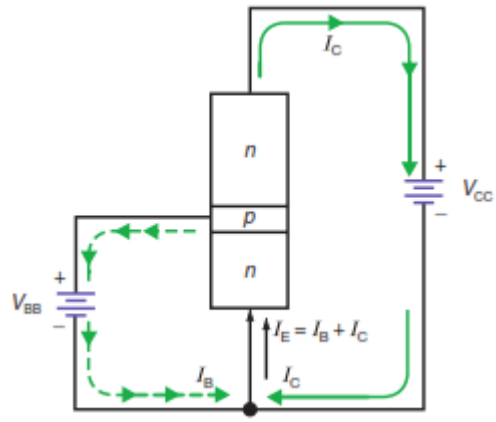

Figure 7–6

COMMON EMITTER CONFIGURATION

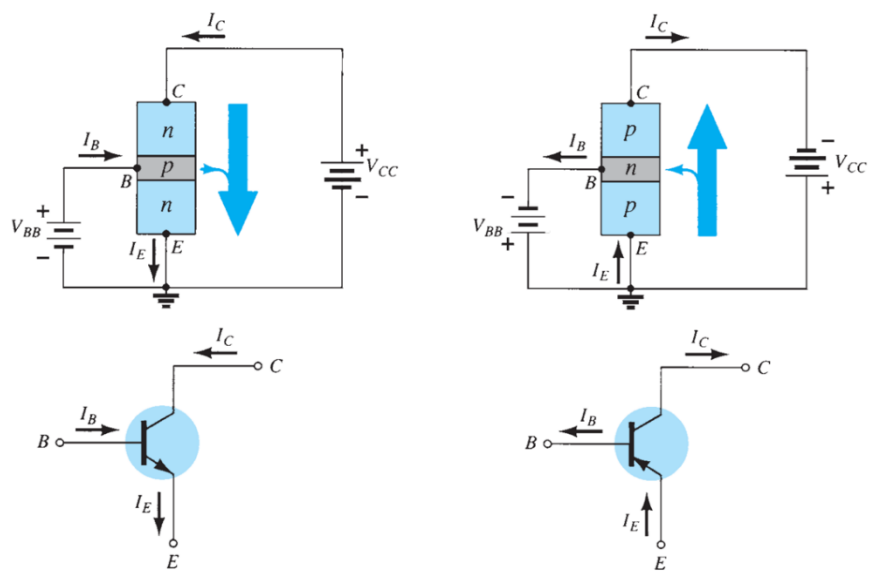

RELATIONSHIP OF DC ALPHA AND DC BETA

$$\alpha = \frac{\beta}{\beta + 1} \qquad and \qquad \beta = \frac{\alpha}{1 - \alpha}$$

EXAMPLE

A transistor has the following currents: I_C = 8 mA, I_B= 50 µA. Calculate the values of the emitter current, dc alpha and dc beta.

$$I_E = I_B + I_C = 8\ mA + 50\ \mu A = 8.05\ mA$$

$$\beta = \frac{I_C}{I_B} = \frac{8\ mA}{50\ \mu A} = 160$$

$$\alpha = \frac{I_C}{I_E} = \frac{8\ mA}{8.05\ mA} = 0.9937$$

COMMON COLLECTOR CONFIGURATION

The third and final transistor configuration is the common-collector configuration, shown below with the proper current directions and voltage notation. The common-collector configuration is used primarily for impedance-matching purposes since it has a high input impedance and low output impedance, opposite to that of the common-base and common-emitter configurations.

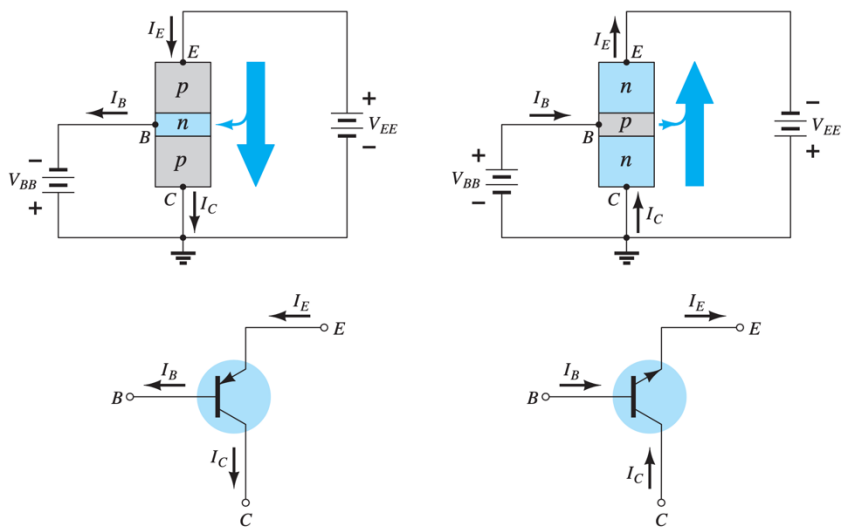

TRANSISTOR OPERATING REGIONS

The behavior of a three-terminal device such as the common-base amplifiers requires two sets of characteristics—one for the driving point or input parameters and the other for the output side.

The input set for the common-base amplifier as shown in Fig. 7–7 relates an input current (I_E) to an input voltage (V_{BE}) for various levels of output voltage (V_{CB}).

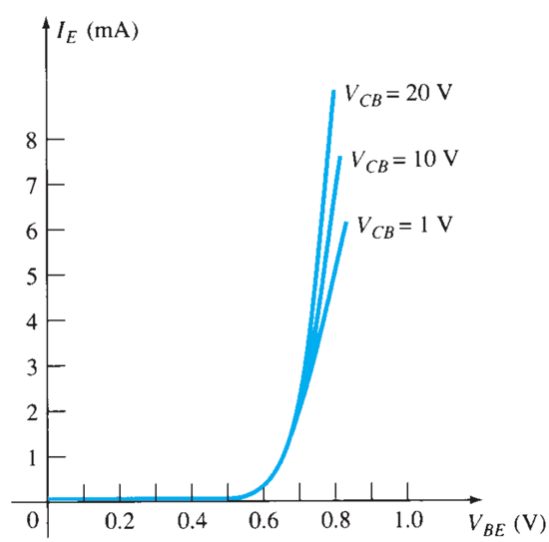

Figure 7–7

Figure 7–8

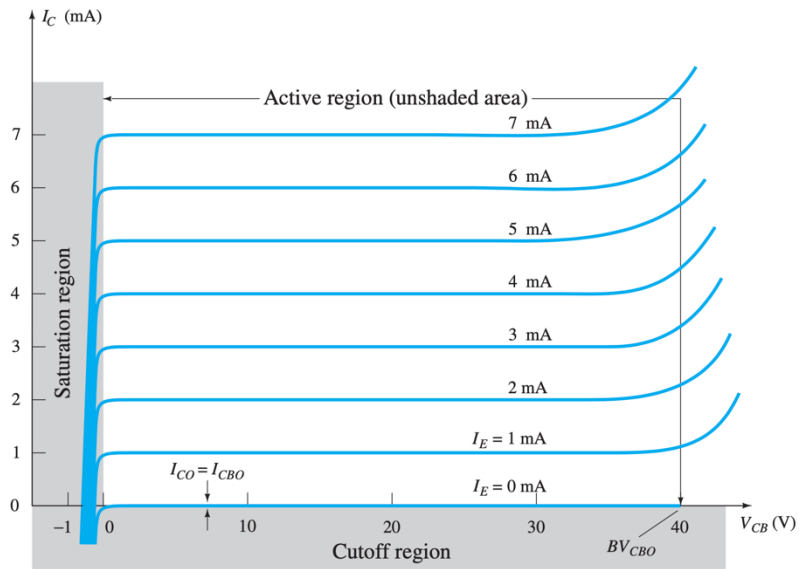

The output or collector set of characteristics has three basic regions, as indicated in Fig. 7.8: the active, cutoff, and saturation regions. The active region is the region normally employed for amplifiers. The active region the base–emitter junction is forward-biased, whereas the collector–base junction is reverse-biased. The collector acts a current source. The cutoff region is defined as that region where the collector current is 0 A. In the cutoff region the base–emitter and collector–base junctions of a transistor are both reverse-biased.

The saturation region is defined as that region of the characteristics to the left of V_{CB} = 0 V. The horizontal scale in this region was expanded to clearly show the dramatic change in characteristics in this region. Note the exponential increase in collector current as the voltage V_{CB} increases toward 0 V. In the saturation region the base–emitter and collector–base junctions are forward-biased.

The transistor functions as an amplifier when it is operated in the active region. The transistor functions as a switch when it is operated in the cut-off region (OFF switch) and saturation region (ON switch).

TRANSISTOR RATINGS

For each transistor there is a region of operation on the characteristics that will ensure that the maximum ratings are not being exceeded and the output signal exhibits minimum distortion. The maximum collector to emitter voltage, $V_{CE(MAX)}$, maximum collector current or saturation current, $I_{C(SAT)}$ and the maximum transistor power dissipation, $P_{D(MAX)}$ are given in the transistor specification sheets.

$$V_{CE(SAT)} \geq V_{CE}$$

$$I_{C(SAT)} \geq I_C$$

$$P_{D(MAX)} \geq V_{CE}\, I_C$$

SUMMARY OF FORMULAS

$$I_E = I_B + I_C$$

$$I_E \cong I_C \text{ since } I_E \gg I_B \text{ and } I_C \gg I_B$$

$$\alpha = \frac{I_C}{I_E} \qquad \beta = \frac{I_C}{I_B}$$

$$\alpha = \frac{\beta}{\beta + 1} \qquad \beta = \frac{\alpha}{1 - \alpha}$$