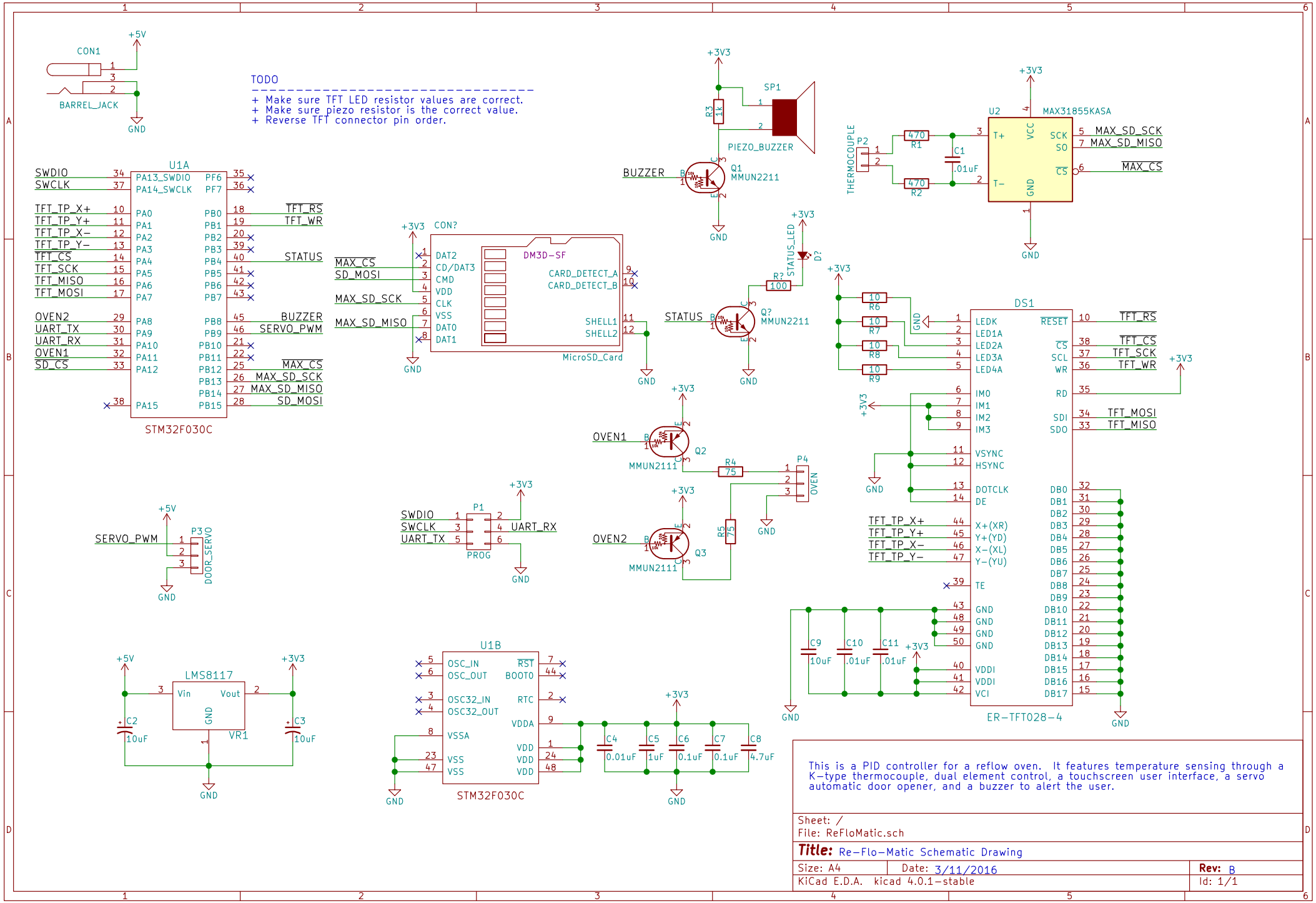
CON1
BARREL_JACK
+5V
GND
TODO
+ Make sure TFT LED resistor values are correct.
+ Make sure piezo resistor is the correct value.
+ Reverse TFT connector pin order.
U1A
STM32F030C
SWDIO
SWCLK
TFT_TP_X+
TFT_TP_Y+
TFT_TP_X−
TFT_TP_Y−
TFT_CS
TFT_SCK
TFT_MISO
TFT_MOSI
OVEN2
UART_TX
UART_RX
OVEN1
SD_CS
TFT_RS
TFT_WR
STATUS
BUZZER
SERVO_PWM
MAX_CS
MAX_SD_SCK
MAX_SD_MISO
SD_MOSI
CON?
DM3D−SF
MicroSD_Card
DAT2
CD/DAT3
CMD
VDD
CLK
VSS
DAT0
DAT1
CARD_DETECT_A
CARD_DETECT_B
SHELL1
SHELL2
+3V3
SP1
PIEZO_BUZZER
R3
1k
Q1
MMUN2211
STATUS_LED
D?
R?
100
Q?
THERMOCOUPLE
P2
R1
R2
470
C1
.01uF
U2
MAX31855KASA
T+
T−
VCC
GND
SCK
SO
CS
R6
R7
R8
R9
10
DS1
ER−TFT028−4
LEDK
LED1A
LED2A
LED3A
LED4A
IM0
IM1
IM2
IM3
VSYNC
HSYNC
DOTCLK
DE
X+(XR)
Y+(YD)
X−(XL)
Y−(YU)
TE
VDDI
VCI
RESET
SDI
SDO
DB0
DB1
DB2
DB3
DB4
DB5
DB6
DB7
DB8
DB9
DB10
DB11
DB12
DB13
DB14
DB15
DB16
DB17
C9
10uF
C10
.01uF
C11
.01uF
OVEN1
Q2
MMUN2111
R4
75
P4
OVEN
OVEN2
Q3
R5
75
P1
PROG
P3
DOOR_SERVO
LMS8117
Vin
Vout
VR1
C2
10uF
C3
10uF
U1B
STM32F030C
OSC_IN
OSC_OUT
OSC32_IN
OSC32_OUT
VSSA
VSS
RST
BOOT0
RTC
VDDA
VDD
C4
0.01uF
C5
1uF
C6
0.1uF
C7
0.1uF
C8
4.7uF
This is a PID controller for a reflow oven. It features temperature sensing through a K−type thermocouple, dual element control, a touchscreen user interface, a servo automatic door opener, and a buzzer to alert the user.
Sheet: /
File: ReFloMatic.sch
Title: Re−Flo−Matic Schematic Drawing
Size: A4
Date: 3/11/2016
Rev: B
KiCad E.D.A. kicad 4.0.1−stable
Id: 1/1