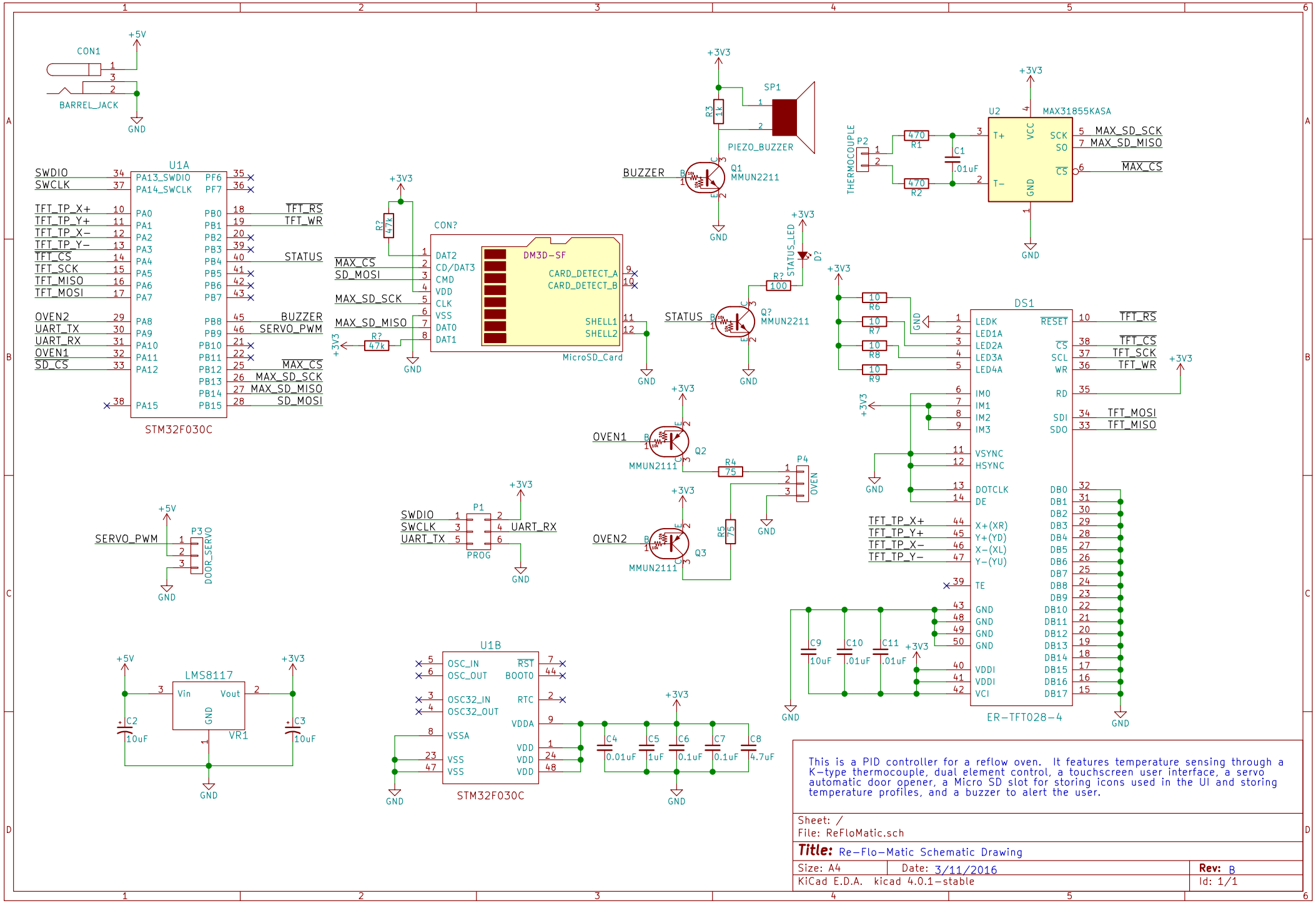

This is a PID controller for a reflow oven. It features temperature sensing through a K−type thermocouple, dual element control, a touchscreen user interface, a servo automatic door opener, a Micro SD slot for storing icons used in the UI and storing temperature profiles, and a buzzer to alert the user.

Sheet: /
File: ReFloMatic.sch

Title: Re−Flo−Matic Schematic Drawing

Size: A4	Date: 3/11/2016	Rev: B
KiCad E.D.A. kicad 4.0.1−stable		Id: 1/1