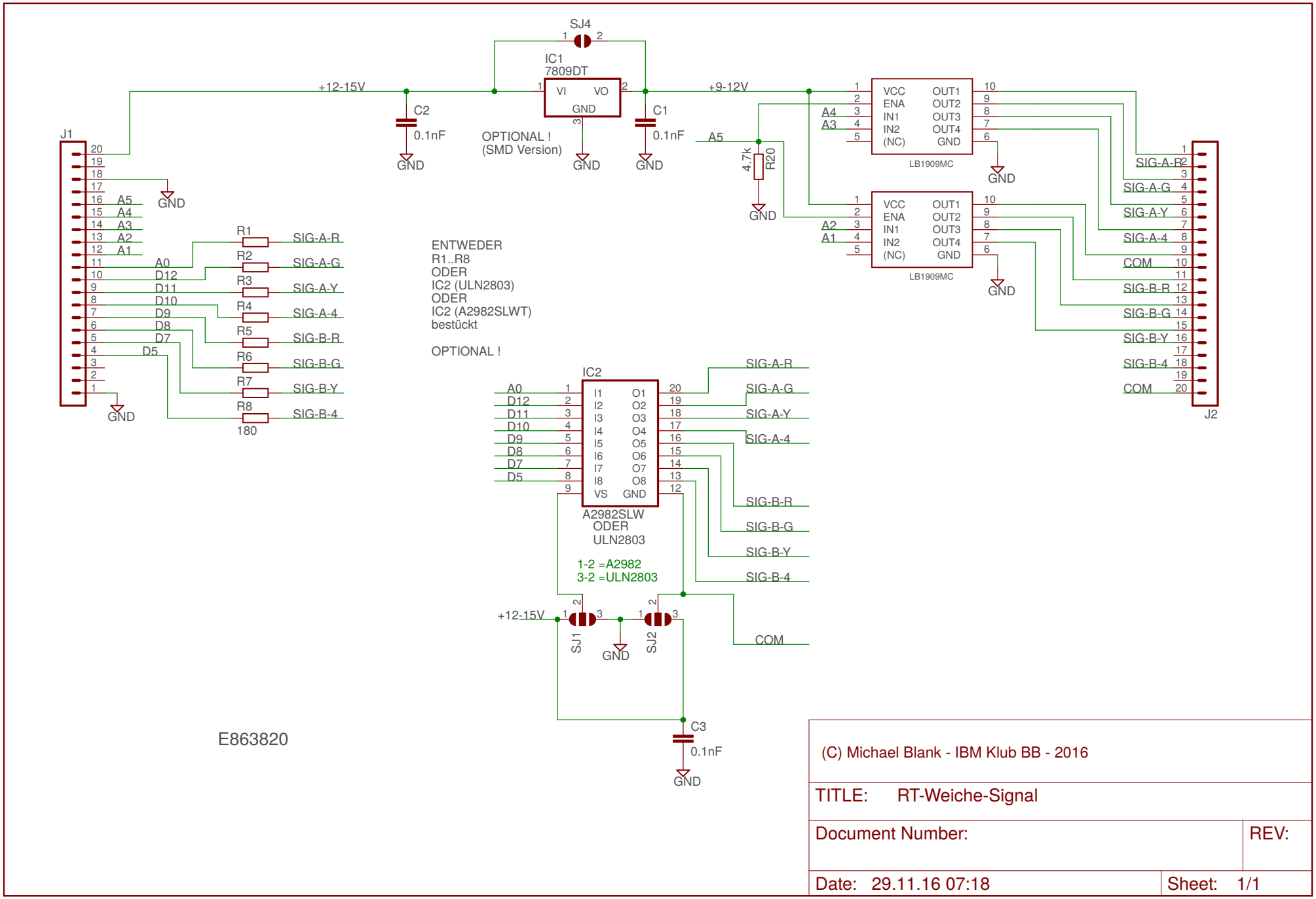
SJ4
IC1
7809DT
VI
VO
GND
+12-15V
C2
0.1nF
OPTIONAL !
(SMD Version)
C1
0.1nF
+9-12V
J1
A5
A4
A3
A2
A1
A0
D12
D11
D10
D9
D8
D7
D5
R1
R2
R3
R4
R5
R6
R7
R8
180
SIG-A-R
SIG-A-G
SIG-A-Y
SIG-A-4
SIG-B-R
SIG-B-G
SIG-B-Y
SIG-B-4
ENTWEDER
R1..R8
ODER
IC2 (ULN2803)
ODER
IC2 (A2982SLWT)
bestückt
OPTIONAL !
IC2
I1
I2
I3
I4
I5
I6
I7
I8
VS
O1
O2
O3
O4
O5
O6
O7
O8
A2982SLW
ODER
ULN2803
1-2 =A2982
3-2 =ULN2803
SJ1
SJ2
COM
C3
0.1nF
4.7k
R20
VCC
ENA
IN1
IN2
(NC)
OUT1
OUT2
OUT3
OUT4
LB1909MC
J2
E863820
(C) Michael Blank - IBM Klub BB - 2016
TITLE: RT-Weiche-Signal
Document Number:
REV:
Date: 29.11.16 07:18
Sheet: 1/1